NOTE
1. Protect the mirror surface during all work processes.
2. Welding of pipes requires full penetration welding.

No.	Name	Material	Quantity	Remarks
1	UEMM		1set	SHEET NO.U−01
2	LEMM		1set	SHEET NO.L−01
3	CAPTIVE_BOLT	ALLOY625	12	See in drawing
4	NOLD−LOCK_WASHER	Stainless steel	12set	Model number : NL16ss
5	UEMM_SUPPLY_EXTENSION_PIPING	Stainless steel	1	SHEET NO.U−50
6	UEMM_RETURN_EXTENSION_PIPING	Stainless steel	1	SHEET NO.U−50
7	LEMM_SUPPLY_EXTENSION_PIPING	Stainless steel	1	SHEET NO.L−46
8	LEMM_RETURN_EXTENSION_PIPING	Stainless steel	1	SHEET NO.L−46
9	REDUCER_TYPE_1	Stainless steel	4	SHEET NO.U−49

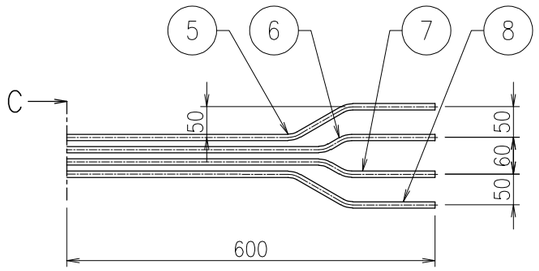

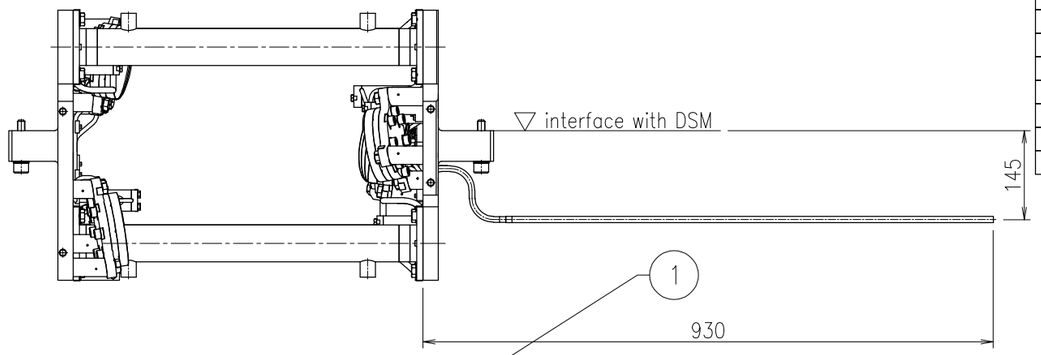

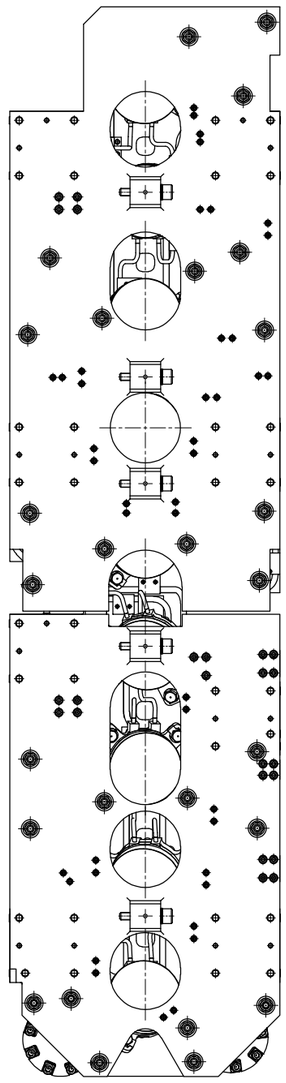

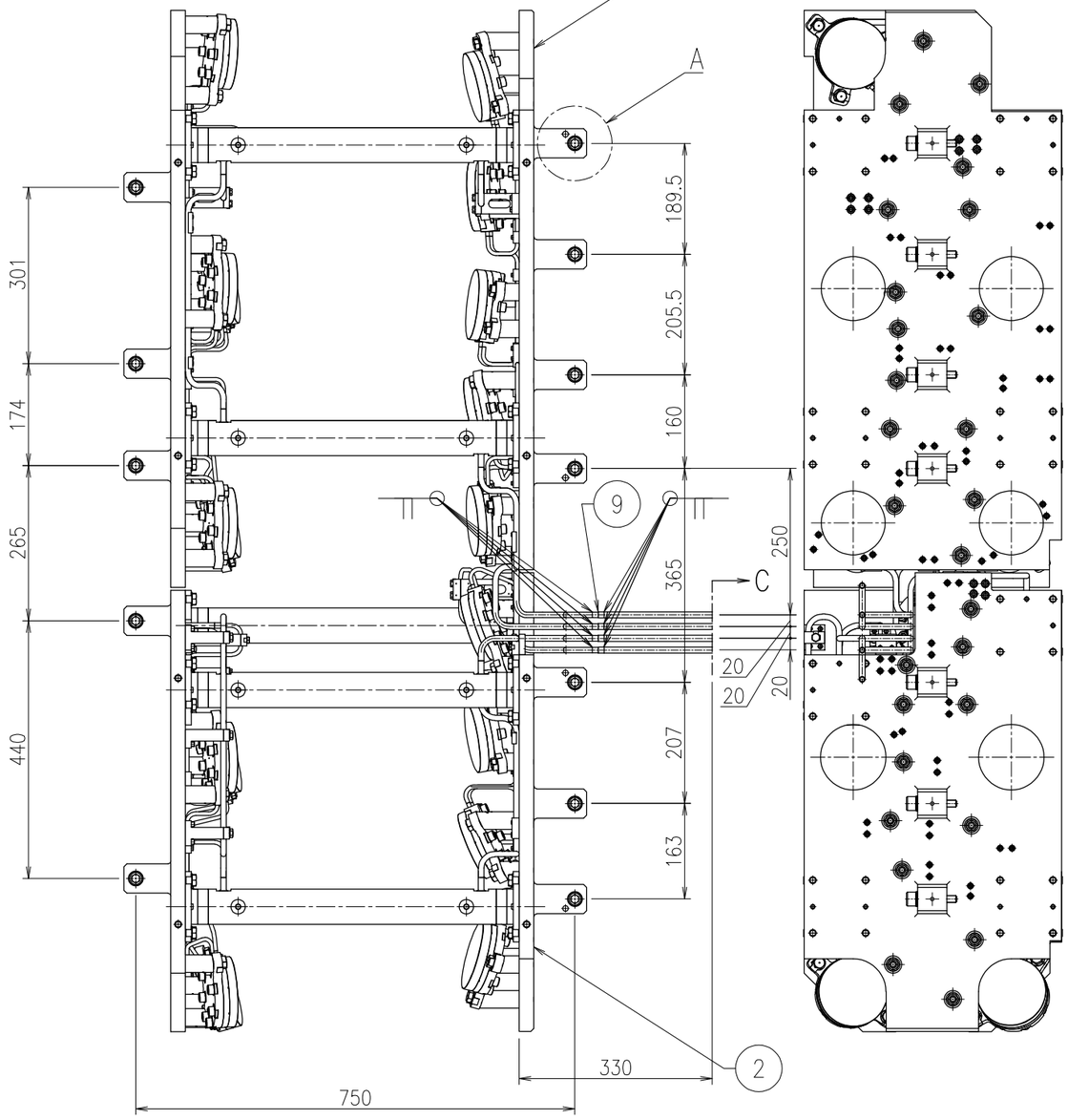

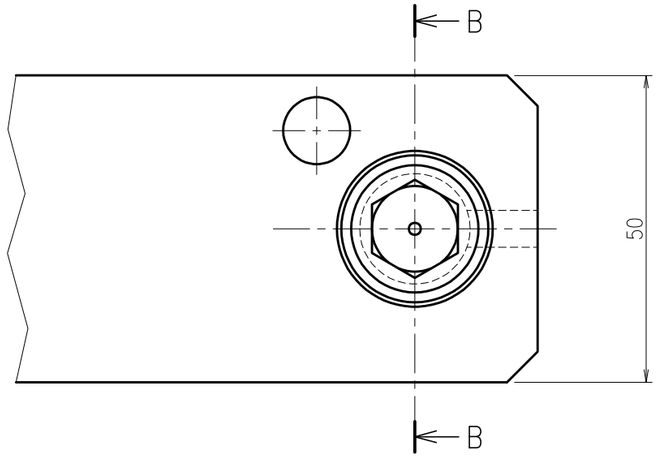

Detail A (1:1)

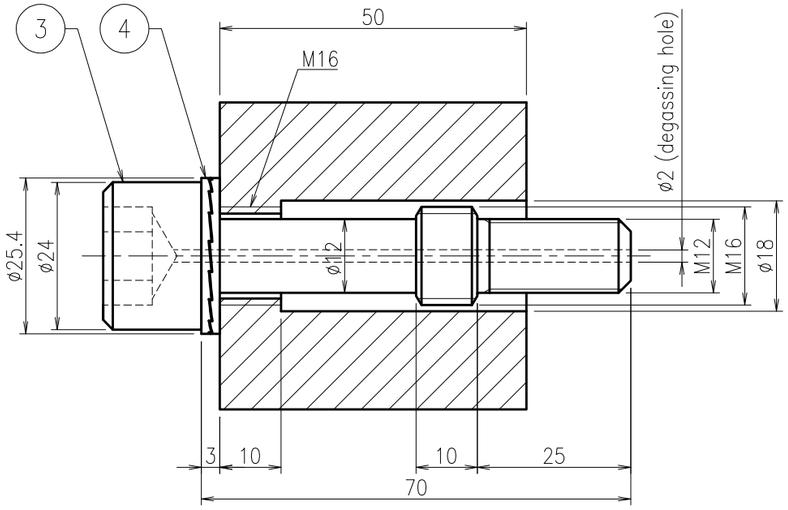

Sectional view B−B (1:1)

Abbreviation
EMM : Equatorial port Mirror Module
UEMM : Upper Equatorial port Mirror Module
LEMM : Lower Equatorial port Mirror Module

REMARKS		APPROVED	REVIEWED	DRAWN	DATE 2021.11.30	PBS TITLE Diagnostics Poloidal Polarimeter	PROJECTION	SIZE A3
	QST National Institutes for Quantum and Radiological Science and Technology				SCALE 1 : 10	DRAWING TITLE EMM_OVERALL_ASSEMBLY	DRAWING NO. JADA-55342DW0100	SHEET NO. 00 / REVISION 0

NOTE

1. Protect the mirror surface during assembly.
2. Welding of pipes requires full penetration welding.

No.	Name	Material	Quantity	Remarks
1	UEMM_FIRST_MODULE_ASSEMBLY		1set	SHEET NO.U-02
2	UEMM_SECOND_MODULE_ASSEMBLY		1set	SHEET NO.U-03
3	CONNECTING_ROD_TYPE_1_ASSEMBLY	SS316LN-IG	1set	SHEET NO.U-42
4	CONNECTING_ROD_TYPE_2_ASSEMBLY	SS316LN-IG	1set	SHEET NO.U-43
5	CONNECTING_ROD_TYPE_3_ASSEMBLY	SS316LN-IG	2set	SHEET NO.U-44
6	POSITIONING_PIN	SS316LN-IG	16	Model number : AFPNHA8-P10-L10-B10(MISUMI)
7	HEXAGON_HEAD_BOLT	SS316LN-IG	32	M12×30
8	TAB_WASHER_M12	SS316LN-IG	32	SHEET NO.U-49

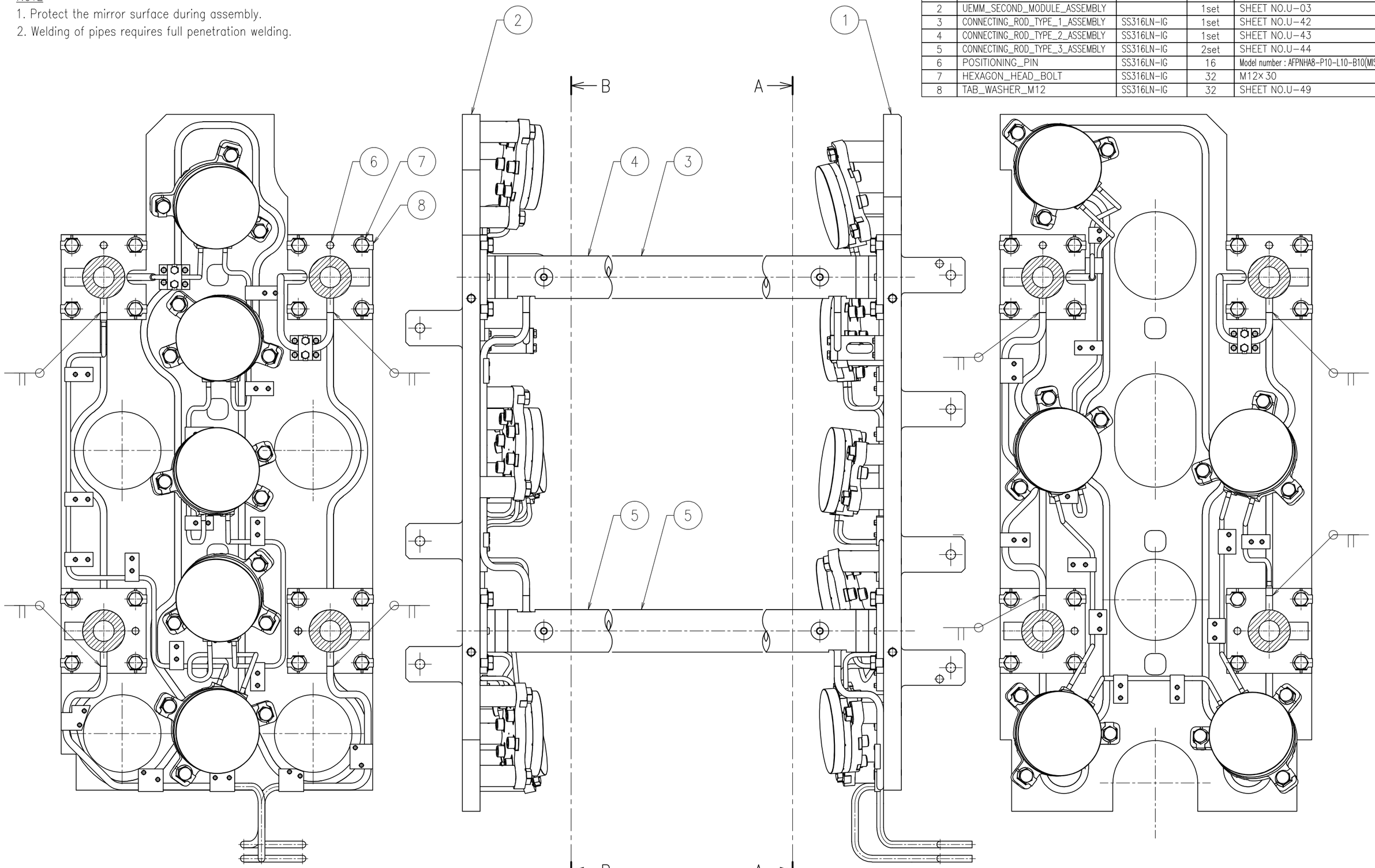

Sectional view A–A

Sectional view B–B

REMARKS		APPROVED	REVIEWED	DRAWN	DATE 2021.11.30	PBS TITLE Diagnostics Poloidal Polarimeter	PROJECTION	SIZE A3
	QST National Institutes for Quantum and Radiological Science and Technology				SCALE 1 : 5	DRAWING TITLE UEMM_ASSEMBLY	DRAWING NO. JADA-55342DW0100	SHEET NO. U-01 / REVISION 0

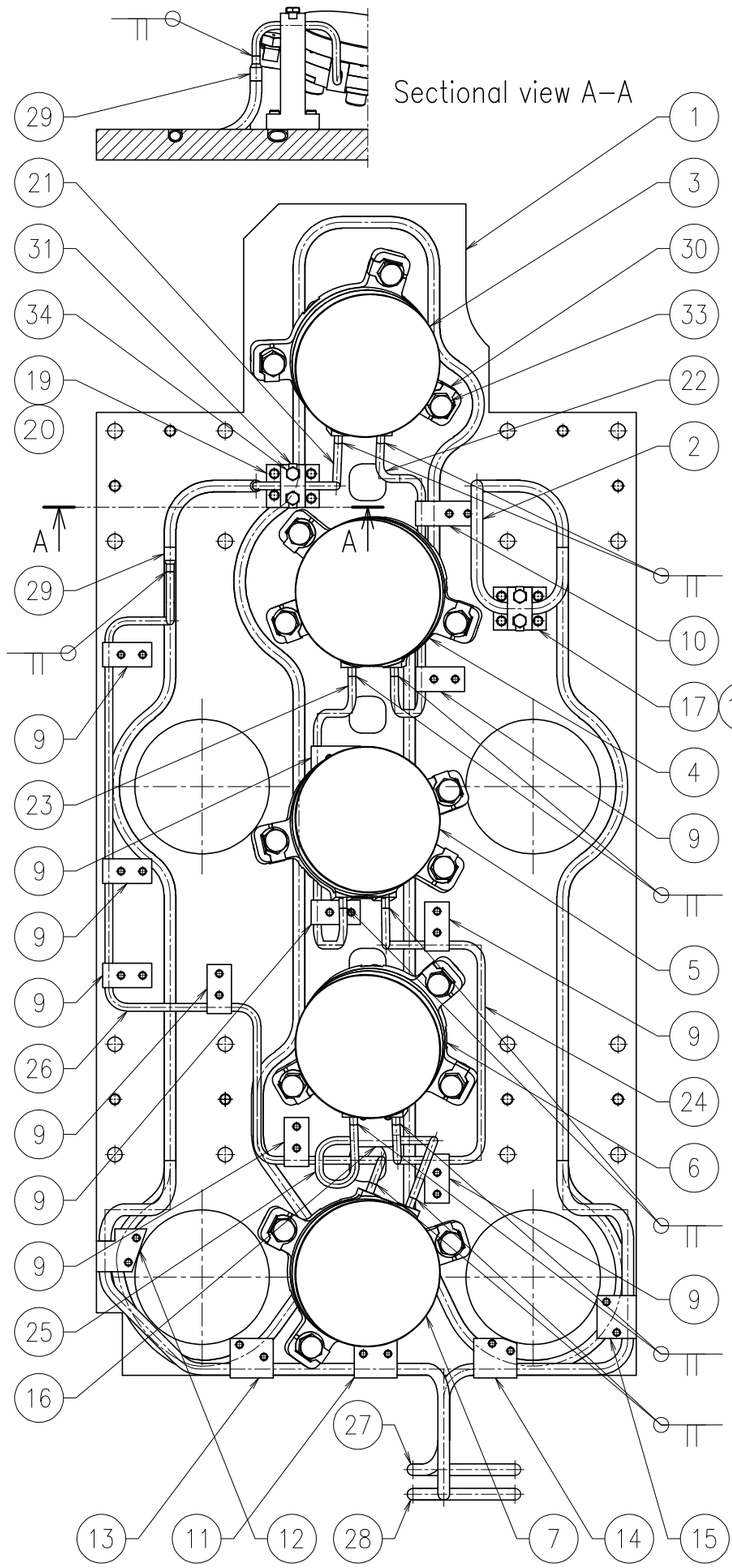

NOTE

1. Protect the mirror surface during assembly.
2. Welding of pipes requires full penetration welding.
3. Welding of part number 36 is performed according to plan A. However, if access is difficult, plan B will be used.

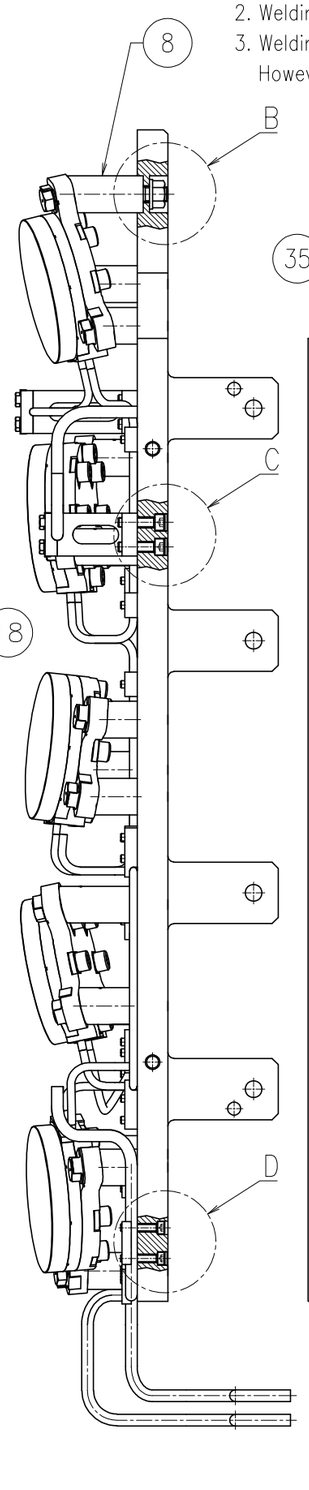

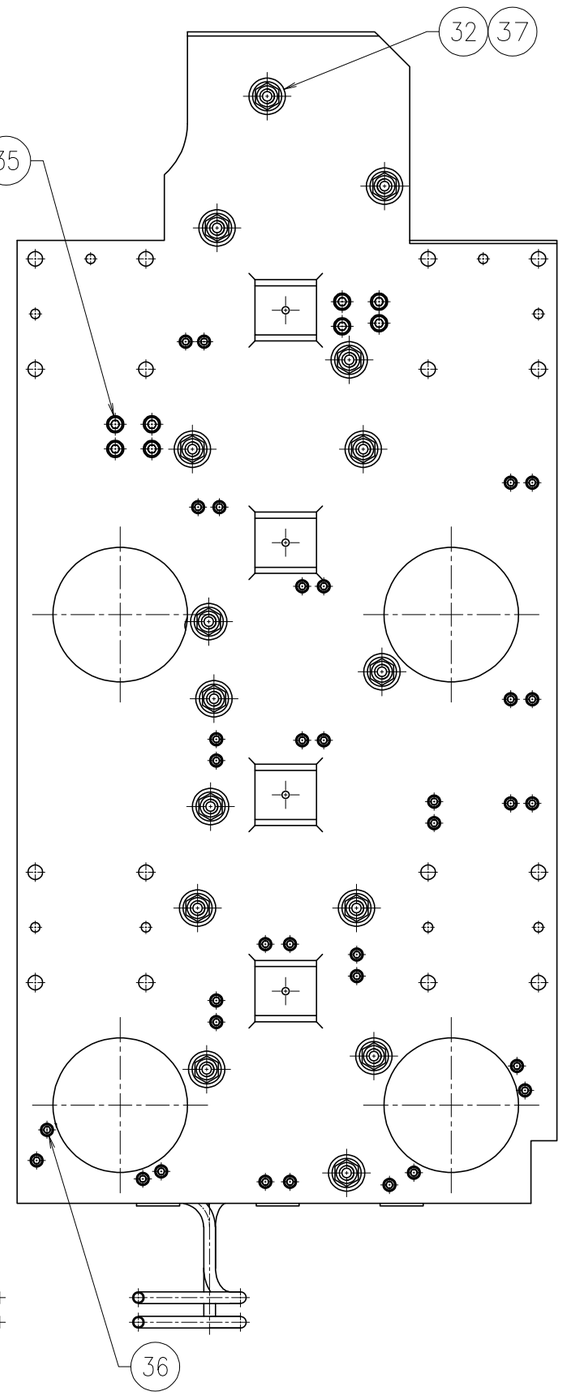

No.	Name	Material	Quantity	Remarks
1	UEMM_FIRST_BASE_PLATE	SS316LN-IG	1	SHEET NO.U-04、U-06
2	UEMM_FIRST_BASE_PIPING	SS316LN-IG	1set	SHEET NO.U-08、U-05
3	MIRROR_ASSEMBLY(M1E1)		1set	SHEET NO.U-12
4	MIRROR_ASSEMBLY(M1E5)		1set	SHEET NO.U-13
5	MIRROR_ASSEMBLY(M1E6)		1set	SHEET NO.U-14
6	MIRROR_ASSEMBLY(M1E7)		1set	SHEET NO.U-15
7	MIRROR_ASSEMBLY(M1E8)		1set	SHEET NO.U-16
8	UEMM_MIRROR_ROD	SS316LN-IG	15	SHEET NO.U-33
9	PIPING_SUPPORT_TYPE_1	SS316LN-IG	9	SHEET NO.U-34
10	PIPING_SUPPORT_TYPE_2	SS316LN-IG	1	SHEET NO.U-34
11	PIPING_SUPPORT_TYPE_7	SS316LN-IG	1	SHEET NO.U-34
12	PIPING_SUPPORT_TYPE_10	SS316LN-IG	1	SHEET NO.U-35
13	PIPING_SUPPORT_TYPE_11	SS316LN-IG	1	SHEET NO.U-35
14	PIPING_SUPPORT_TYPE_12	SS316LN-IG	1	SHEET NO.U-35
15	PIPING_SUPPORT_TYPE_13	SS316LN-IG	1	SHEET NO.U-35
16	PIPING_SUPPORT_TYPE_14	SS316LN-IG	1	SHEET NO.U-35
17	PIPING_SUPPORT_PILLAR_TYPE_1	SS316LN-IG	1	SHEET NO.U-36
18	PIPING_SUPPORT_COVER_TYPE_1	SS316LN-IG	1	SHEET NO.U-36
19	PIPING_SUPPORT_PILLAR_TYPE_2	SS316LN-IG	1	SHEET NO.U-36
20	PIPING_SUPPORT_COVER_TYPE_2	SS316LN-IG	1	SHEET NO.U-36
21	UEMM_FIRST_MIRROR_PIPING_TYPE_1	SS316LN-IG	1	SHEET NO.U-37
22	UEMM_FIRST_MIRROR_PIPING_TYPE_2	SS316LN-IG	1	SHEET NO.U-37
23	UEMM_FIRST_MIRROR_PIPING_TYPE_3	SS316LN-IG	1	SHEET NO.U-37
24	UEMM_FIRST_MIRROR_PIPING_TYPE_4	SS316LN-IG	1	SHEET NO.U-37
25	UEMM_FIRST_MIRROR_PIPING_TYPE_5	SS316LN-IG	1	SHEET NO.U-37
26	UEMM_FIRST_MIRROR_PIPING_TYPE_6	SS316LN-IG	1	SHEET NO.U-38
27	UEMM_SUPPLY_PIPING	SS316LN-IG	1	SHEET NO.U-40
28	UEMM_RETURN_PIPING	SS316LN-IG	1	SHEET NO.U-40
29	REDUCER	SS316LN-IG	2	SHEET NO.U-49
30	TAB_WASHER_M12	SS316LN-IG	15	SHEET NO.U-49
31	TAB_WASHER_M6	SS316LN-IG	4	SHEET NO.U-49
32	SPECIAL_WASHER_M12	SS316LN-IG	15	SHEET NO.U-49
33	HEXAGON_HEAD_BOLT	SS316LN-IG	15	M12×30
34	HEXAGON_HEAD_BOLT	SS316LN-IG	4	M6×20
35	HEXAGON_SOCKET_HEAD_CAP_SCREW	SS316LN-IG	8	M8×30
36	HEXAGON_SOCKET_HEAD_CAP_SCREW	SS316LN-IG	34	M6×30
37	HEXAGON_NUT	SS316LN-IG	15	M12

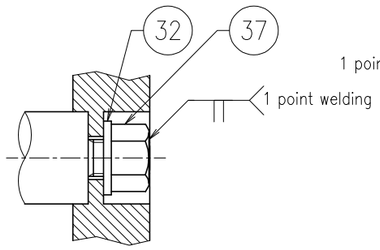

Detail B (1:2)

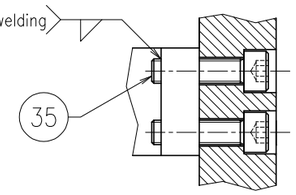

Detail C (1:2)

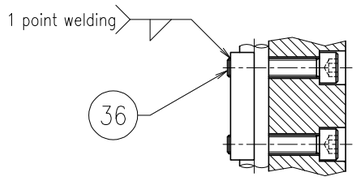

Detail D (1:2)
(Plan A)

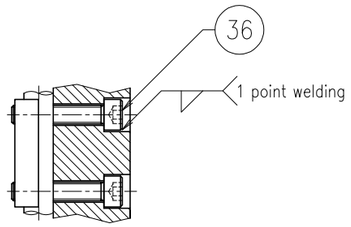

Detail D (1:2)
(Plan B)

REMARKS		APPROVED	REVIEWED	DRAWN	DATE	PBS TITLE	PROJECTION	SIZE
	QST National Institutes for Quantum and Radiological Science and Technology				2021.11.30	Diagnostics Poloidal Polarimeter		A3
					SCALE 1 : 5	DRAWING TITLE UEMM_FIRST_MODULE_ASSEMBLY	DRAWING NO. JADA-55342DW0100	SHEET NO. U-02 / REVISION 0

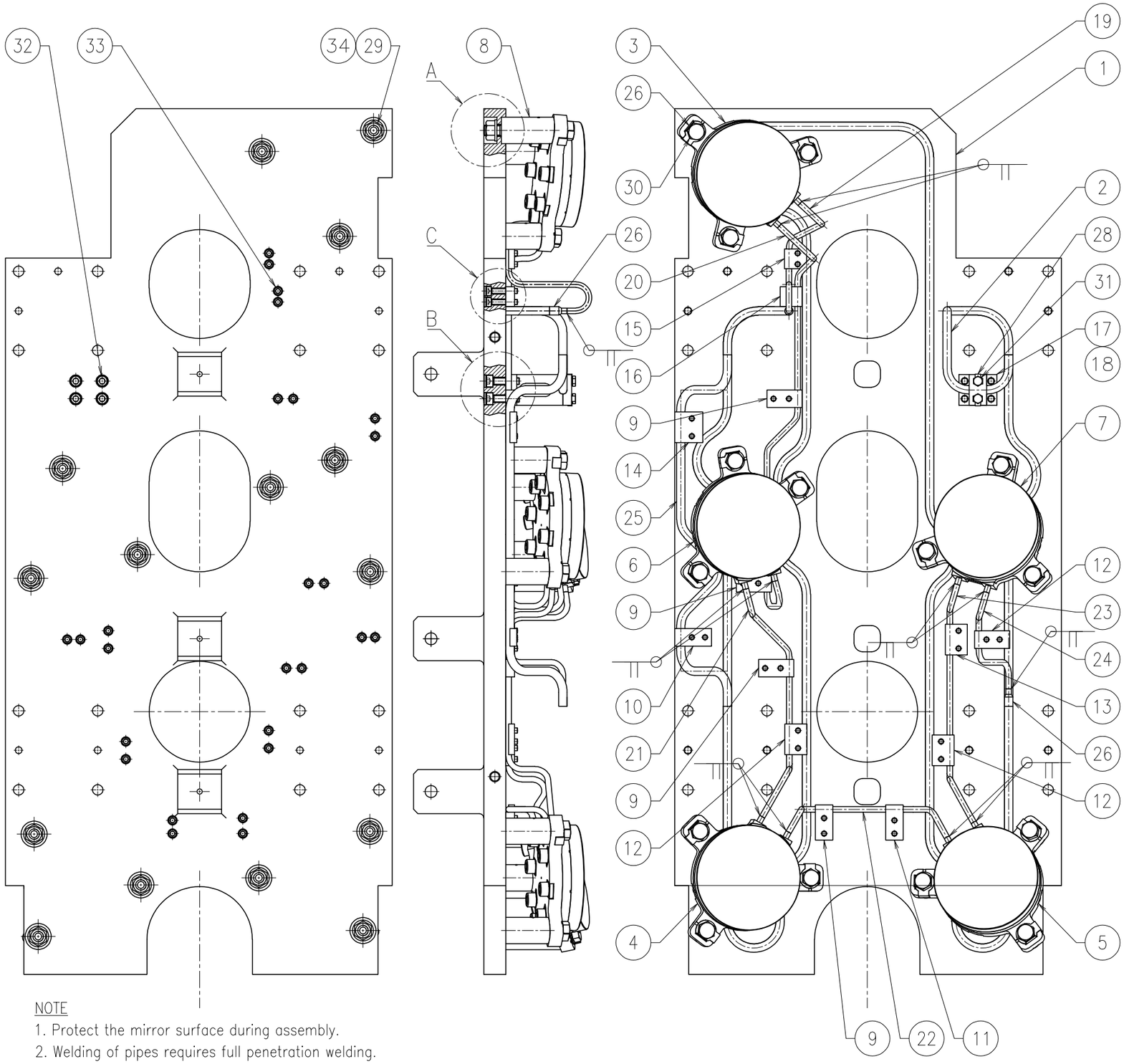

No.	Name	Material	Quantity	Remarks
1	UEMM_SECOND_BASE_PLATE	SS316LN-IG	1	SHEET NO.U-05、07
2	UEMM_SECOND_BASE_PIPING	SS316LN-IG	1set	SHEET NO.U-09
3	MIRROR_ASSEMBLY(M2E1)		1set	SHEET NO.U-17
4	MIRROR_ASSEMBLY(M2E5)		1set	SHEET NO.U-18
5	MIRROR_ASSEMBLY(M2E6)		1set	SHEET NO.U-19
6	MIRROR_ASSEMBLY(M2E7)		1set	SHEET NO.U-20
7	MIRROR_ASSEMBLY(M2E8)		1set	SHEET NO.U-21
8	UEMM_MIRROR_ROD	SS316LN-IG	15	SHEET NO.U-33
9	PIPING_SUPPORT_TYPE_1	SS316LN-IG	4	SHEET NO.U-34
10	PIPING_SUPPORT_TYPE_3	SS316LN-IG	1	SHEET NO.U-34
11	PIPING_SUPPORT_TYPE_4	SS316LN-IG	1	SHEET NO.U-34
12	PIPING_SUPPORT_TYPE_5	SS316LN-IG	1	SHEET NO.U-34
13	PIPING_SUPPORT_TYPE_6	SS316LN-IG	3	SHEET NO.U-34
14	PIPING_SUPPORT_TYPE_7	SS316LN-IG	1	SHEET NO.U-34
15	PIPING_SUPPORT_TYPE_8	SS316LN-IG	1	SHEET NO.U-34
16	PIPING_SUPPORT_TYPE_9	SS316LN-IG	1	SHEET NO.U-34
17	PIPING_SUPPORT_PILLAR_TYPE_1	SS316LN-IG	1	SHEET NO.U-36
18	PIPING_SUPPORT_COVER_TYPE_1	SS316LN-IG	1	SHEET NO.U-36
19	UEMM_SECOND_MIRROR_PIPING_TYPE_1	SS316LN-IG	1	SHEET NO.U-39
20	UEMM_SECOND_MIRROR_PIPING_TYPE_2	SS316LN-IG	1	SHEET NO.U-39
21	UEMM_SECOND_MIRROR_PIPING_TYPE_3	SS316LN-IG	1	SHEET NO.U-39
22	UEMM_SECOND_MIRROR_PIPING_TYPE_4	SS316LN-IG	1	SHEET NO.U-39
23	UEMM_SECOND_MIRROR_PIPING_TYPE_5	SS316LN-IG	1	SHEET NO.U-39
24	UEMM_SECOND_MIRROR_PIPING_TYPE_6	SS316LN-IG	1	SHEET NO.U-39
25	UEMM_CONNECTING_ROD_INTER_PIPING	SS316LN-IG	1	SHEET NO.U-41
26	REDUCER	SS316LN-IG	2	SHEET NO.U-49
27	TAB_WASHER_M12	SS316LN-IG	12	SHEET NO.U-49
28	TAB_WASHER_M6	SS316LN-IG	2	SHEET NO.U-49
29	SPECIAL_WASHER_M12	SS316LN-IG	12	SHEET NO.U-49
30	HEXAGON_HEAD_BOLT	SS316LN-IG	12	M12×30
31	HEXAGON_HEAD_BOLT	SS316LN-IG	2	M6×20
32	HEXAGON_SOCKET_HEAD_CAP_SCREW	SS316LN-IG	4	M8×30
33	HEXAGON_SOCKET_HEAD_CAP_SCREW	SS316LN-IG	26	M6×30
34	HEXAGON_NUT	SS316LN-IG	12	M12

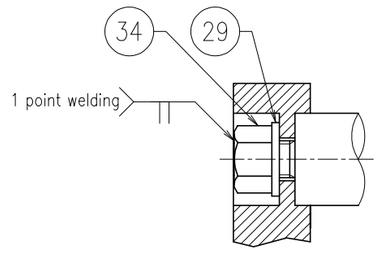

Detail A (1:2)

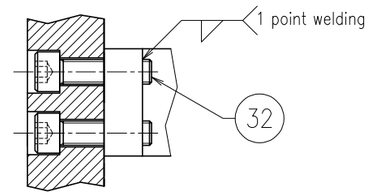

Detail B (1:2)

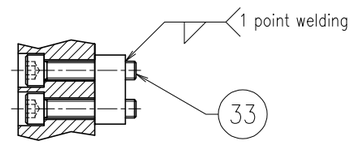

Detail C (1:2)
(Plan A)

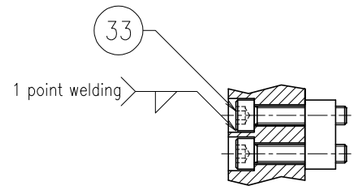

Detail C (1:2)
(Plan B)

NOTE
1. Protect the mirror surface during assembly.
2. Welding of pipes requires full penetration welding.
3. Welding of part number 33 is performed according to plan A. However, if access is difficult, plan B will be used.

REMARKS		APPROVED	REVIEWED	DRAWN	DATE 2021.11.30	PBS TITLE Diagnostics Poloidal Polarimeter		PROJECTION	SIZE A3
	QST National Institutes for Quantum and Radiological Science and Technology				SCALE 1 : 5	DRAWING TITLE UEMM_SECOND_MODULE_ASSEMBLY	DRAWING NO. JADA-55342DW0100	SHEET NO. U-03	REVISION 0

General Tolerance : ISO 2768 m-K
Surface roughness not indicated : Ra6.3

NOTE
1. This drawing shows the first base plate of the UEMM.
2. The ridges and corners should be chamfered(about C0.2), and there should be no burrs.
3. After processing, perform degreasing cleaning.

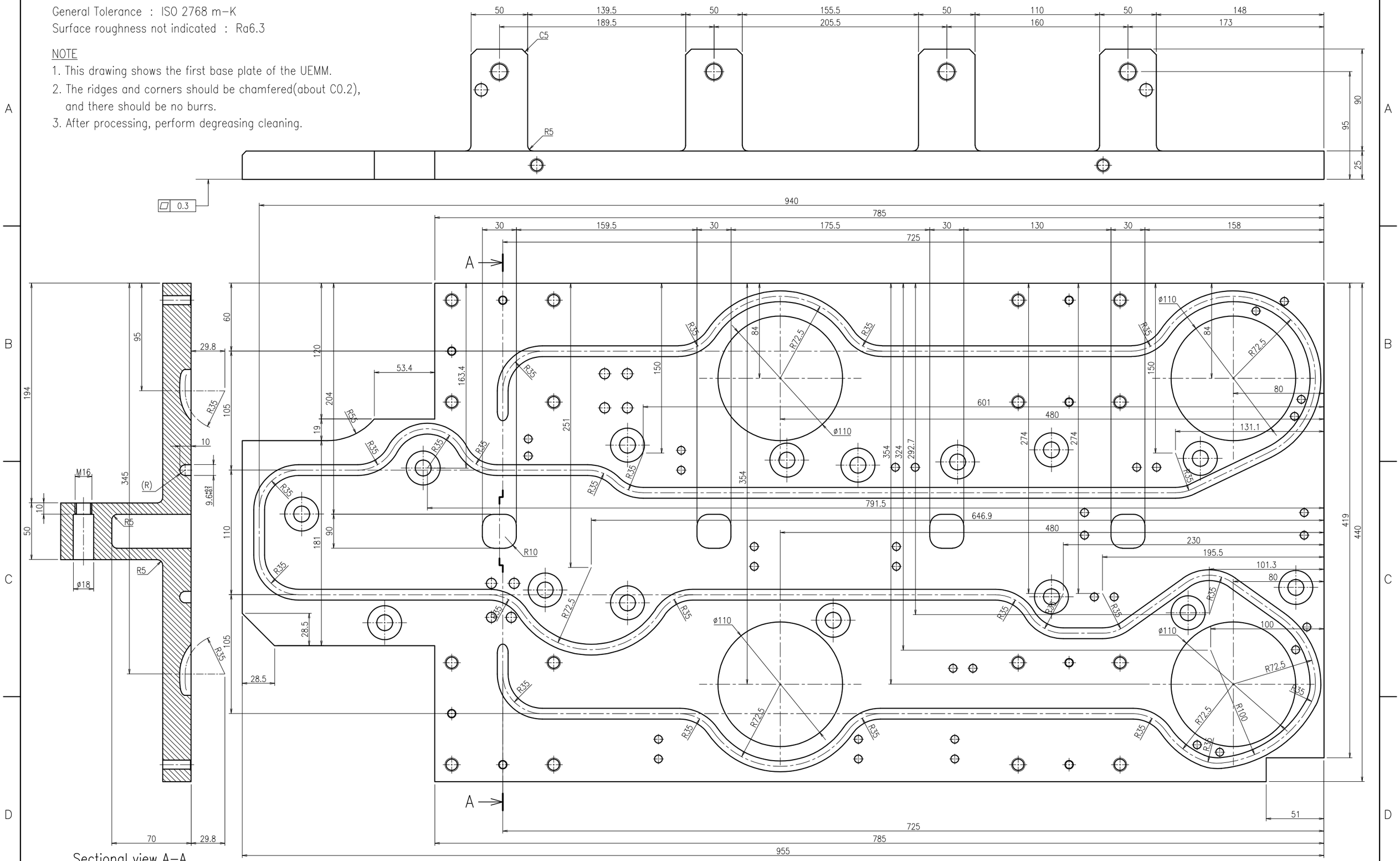

REMARKS		APPROVED	REVIEWED	DRAWN	DATE 2021.11.30	PBS TITLE Diagnostics Poloidal Polarimeter	PROJECTION	SIZE A3
	QST National Institutes for Quantum and Radiological Science and Technology				SCALE 1 : 3	DRAWING TITLE UEMM_FIRST_BASE_PLATE(1/2)	DRAWING NO. JADA-55342DW0100	SHEET NO. U-04 / REVISION 0

General Tolerance : ISO 2768 m-K
Surface roughness not indicated : Ra6.3

NOTE
1. This drawing shows the first base plate of the UEMM.
2. The ridges and corners should be chamfered(about C0.2), and there should be no burrs.
3. After processing, perform degreasing cleaning.

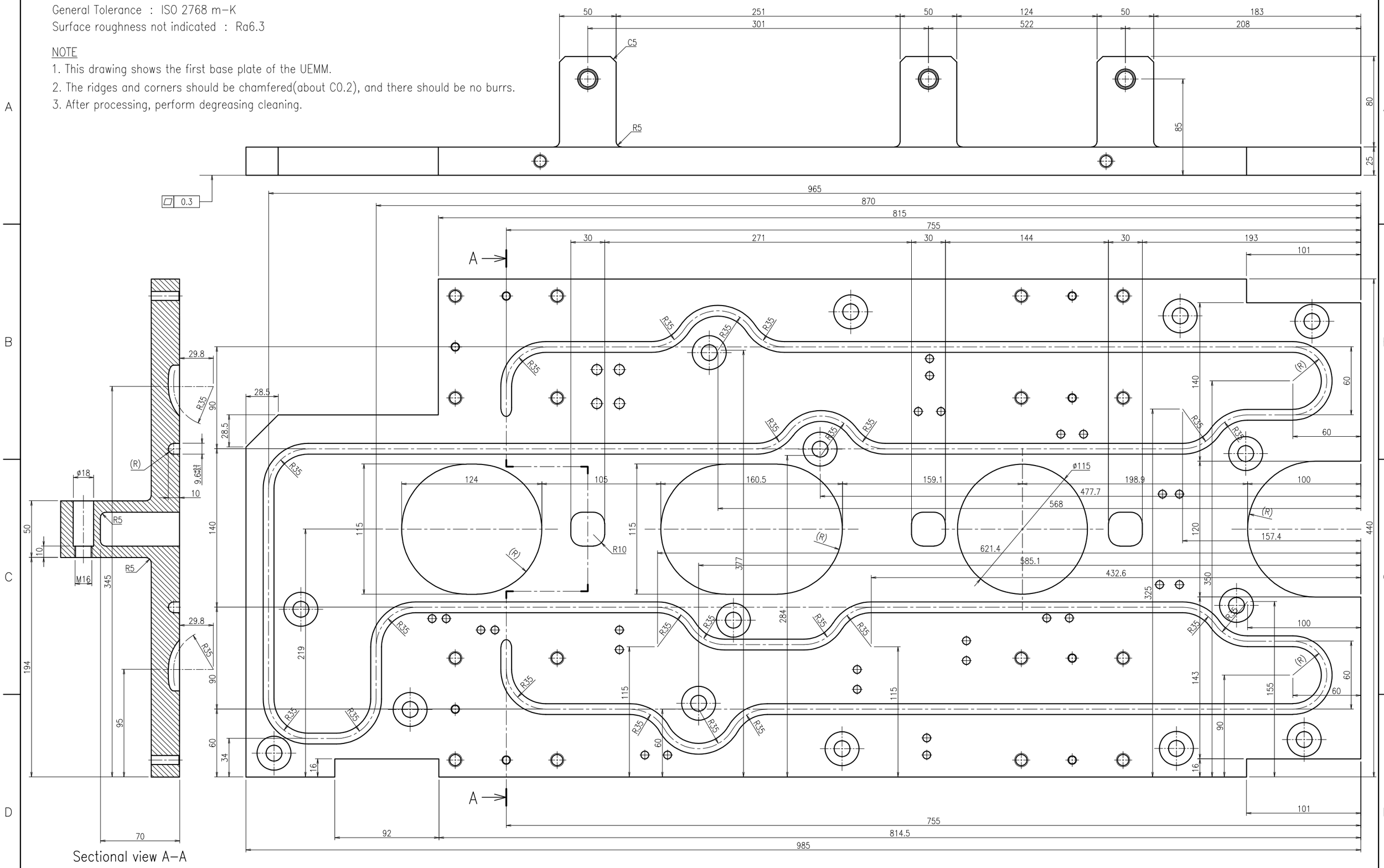

REMARKS		APPROVED	REVIEWED	DRAWN	DATE 2021.11.30	PBS TITLE Diagnostics Poloidal Polarimeter		PROJECTION	SIZE A3
	QST National Institutes for Quantum and Radiological Science and Technology				SCALE 1 : 3	DRAWING TITLE UEMM_SECOND_BASE_PLATE(1/2)	DRAWING NO. JADA-55342DW0100	SHEET NO. U-05	REVISION 0

General Tolerance : ISO 2768 m-K
Surface roughness not indicated : Ra6.3

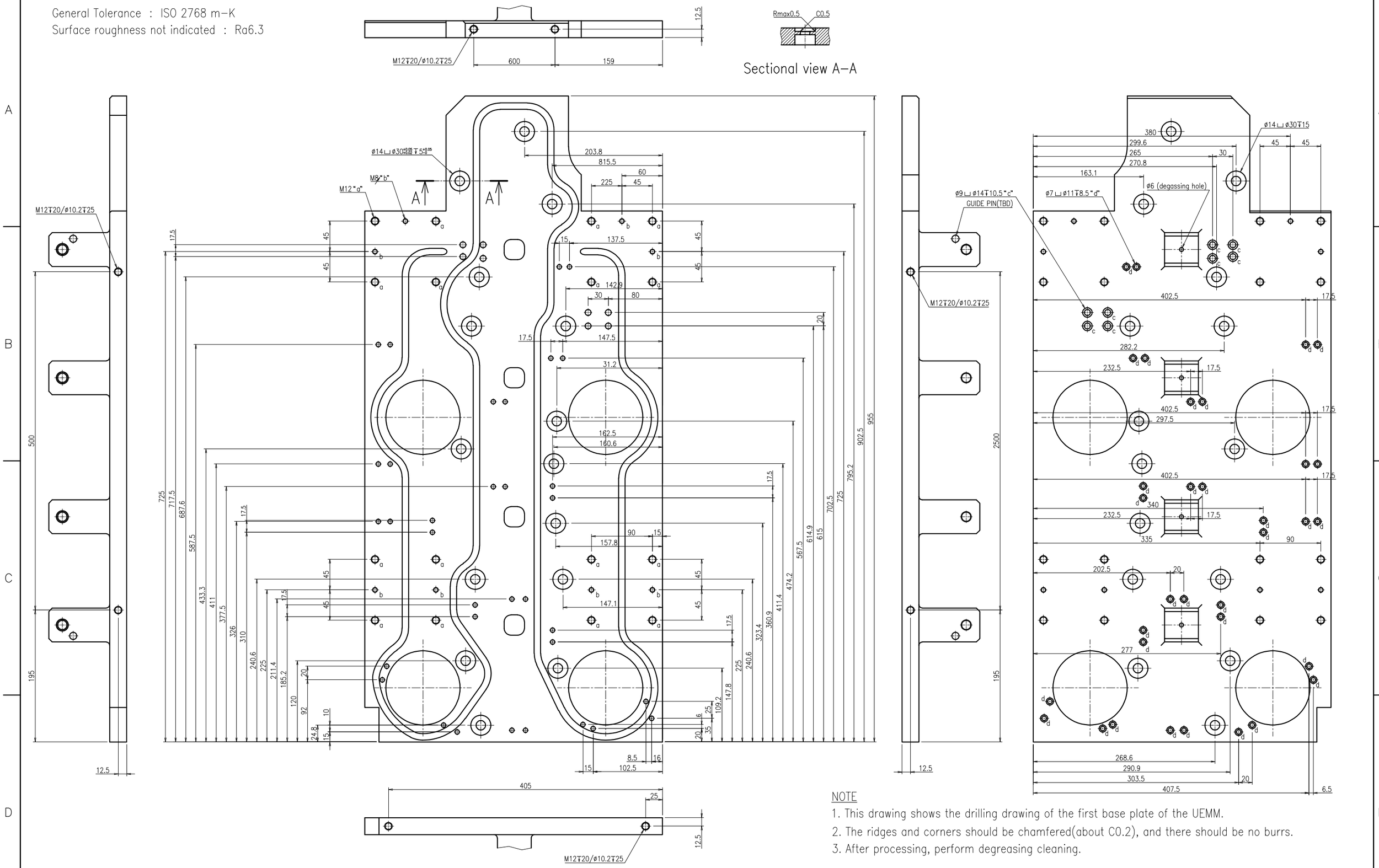

NOTE

1. This drawing shows the drilling drawing of the first base plate of the UEMM.
2. The ridges and corners should be chamfered(about C0.2), and there should be no burrs.
3. After processing, perform degreasing cleaning.

REMARKS		APPROVED	REVIEWED	DRAWN	DATE	PBS TITLE		PROJECTION	SIZE
	QST National Institutes for Quantum and Radiological Science and Technology				2021.11.30	Diagnostics Poloidal Polarimeter			A3
					SCALE 1 : 5	DRAWING TITLE UEMM_FIRST_BASE_PLATE(2/2)	DRAWING NO. JADA-55342DW0100	SHEET NO. U-06	REVISION 0

General Tolerance : ISO 2768 m-K
Surface roughness not indicated : Ra6.3

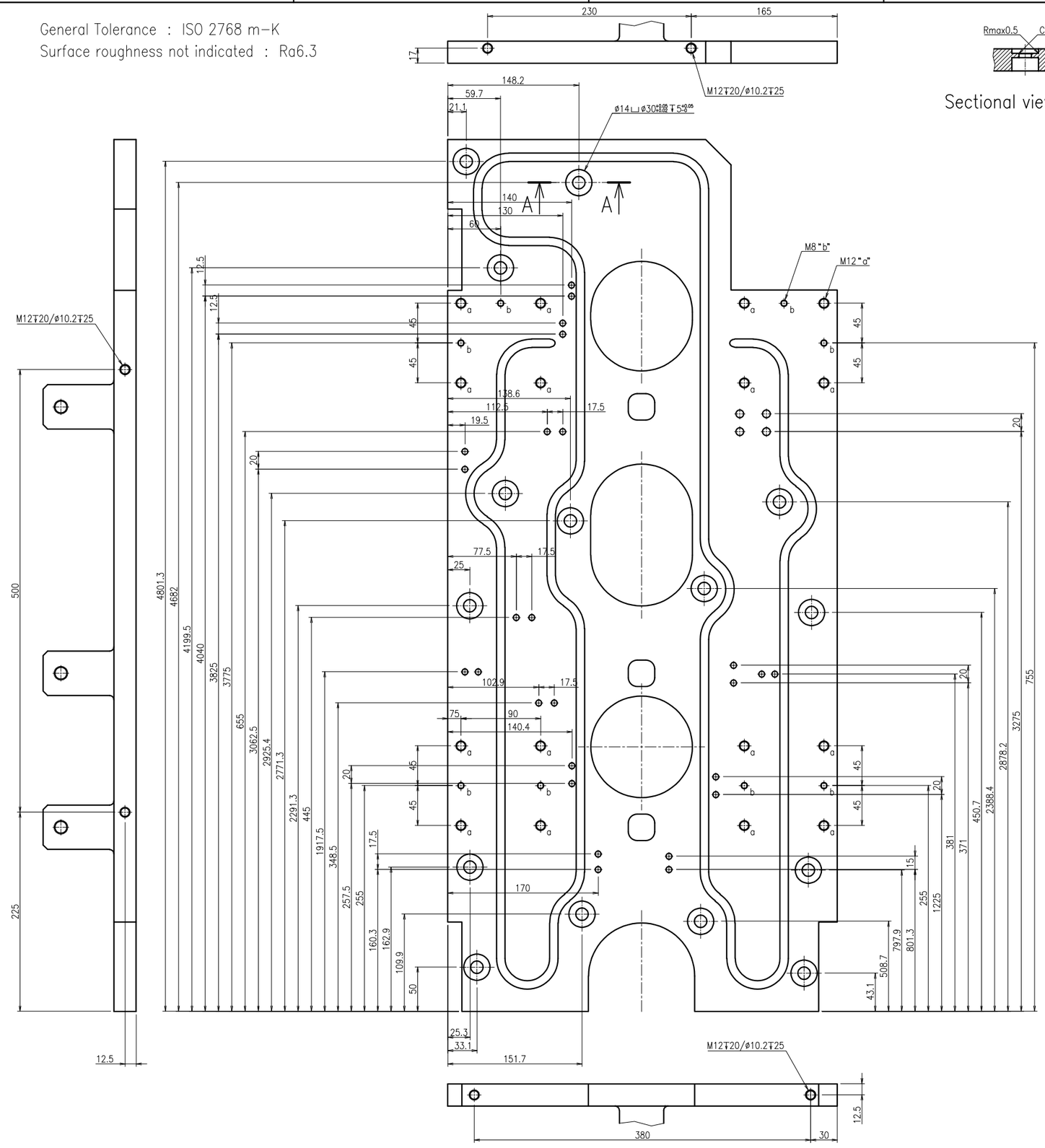

Sectional view A–A

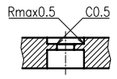

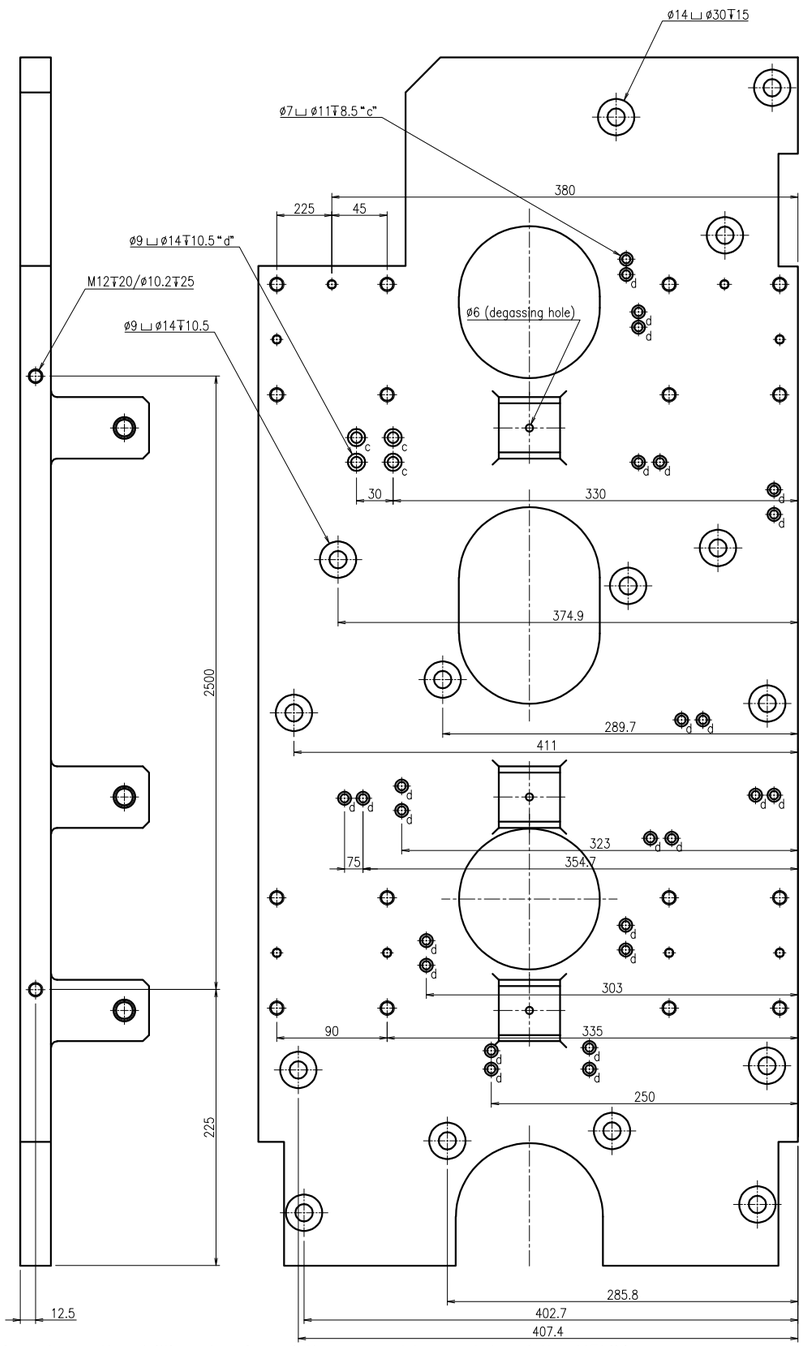

NOTE

1. This drawing shows the drilling drawing of the second base plate of the UEMM
2. The ridges and corners should be chamfered(about C0.2), and there should be no burrs.
3. After processing, perform degreasing cleaning.

REMARKS		APPROVED	REVIEWED	DRAWN	DATE	PBS TITLE	PROJECTION	SIZE
	QST National Institutes for Quantum and Radiological Science and Technology				2021.11.30	Diagnostics Poloidal Polarimeter		A3
					SCALE 1 : 5	DRAWING TITLE UEMM_SECOND_BASE_PLATE(2/2)	DRAWING NO. JADA-55342DW0100	SHEET NO. U-07 / REVISION 0

Name	Material	Quantity	Remarks
UPPER_FIRST_BASE_PIPING	SS316LN-IG	1set	

NOTE

1. This drawing shows the cooling water piping embedded in the base on the first mirror side of the UEMM.
2. The bending dimension of this pipe is processed according to the groove of the base plate (SHEET NO.U-04).
   When bending pipes, a manufacture shall follow 3D CAD that QST will provide.
3. A manufacture is allowed to join pipes by welding with full penetration. The manufacture shall specify the welding joints in their manufacturing drawing that will be prepared by MRR.
4. After processing, perform degreasing cleaning.

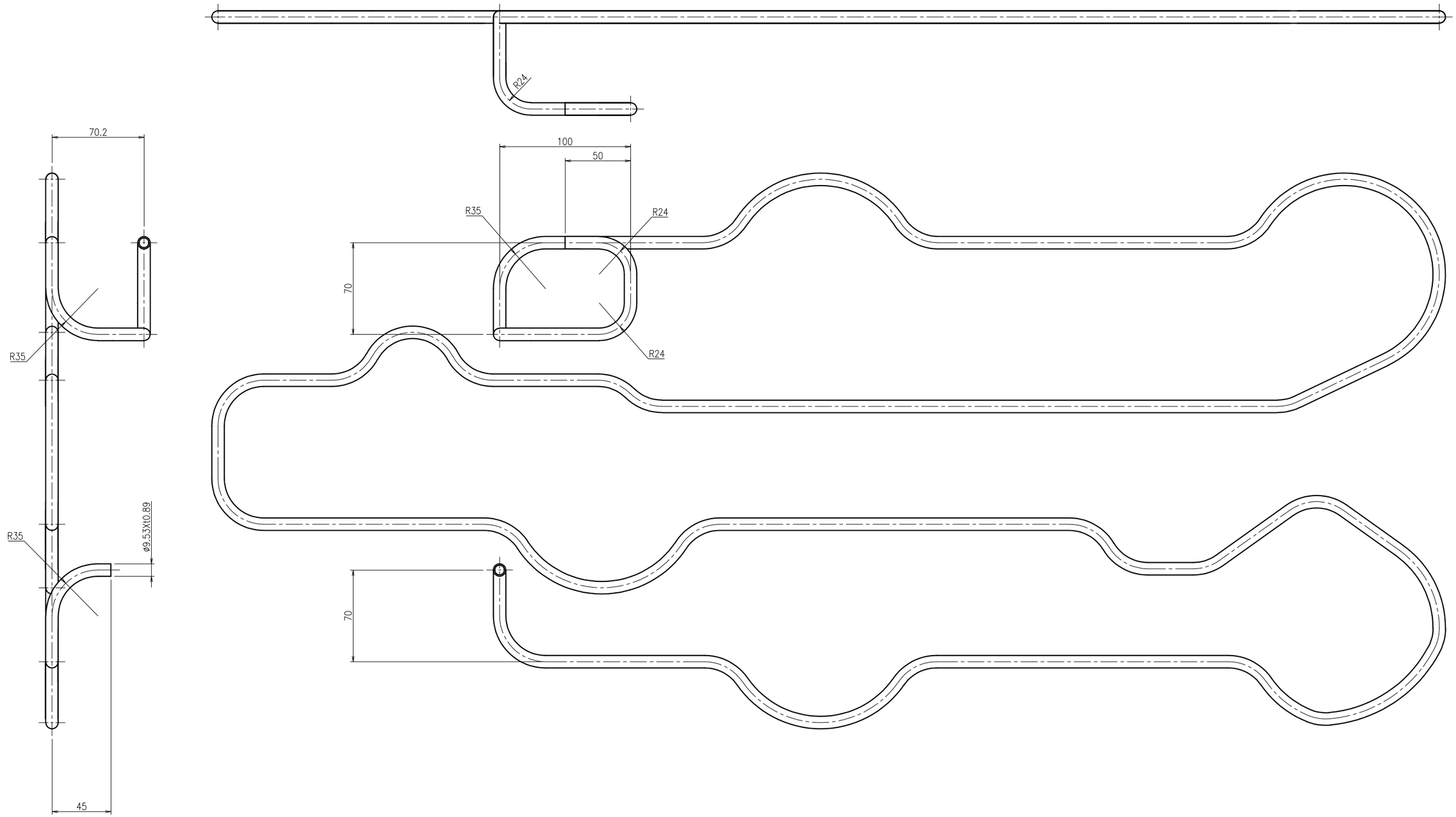

REMARKS		APPROVED	REVIEWED	DRAWN	DATE 2021.11.30	PBS TITLE Diagnostics Poloidal Polarimeter		PROJECTION	SIZE A3
	QST National Institutes for Quantum and Radiological Science and Technology				SCALE 1 : 3	DRAWING TITLE UEMM_FIRST_BASE_PIPING	DRAWING NO. JADA-55342DW0100	SHEET NO. U-08	REVISION 0

IO APPROVED BY : VAYAKIS G. DATE : 18 MAR 2022 INTENDED USAGE : FOR TENDER

Name	Material	Quantity	Remarks
SS316LN-IG	SS316LN-IG	1set	

NOTE

1. This drawing shows the cooling water piping embedded in the base on the first mirror side of the UEMM.
2. The bending dimension of this pipe is processed according to the groove of the base plate (SHEET NO.U-05).
   When bending pipes, a manufacture shall follow 3D CAD that QST will provide.
3. A manufacture is allowed to join pipes by welding with full penetration. The manufacture shall specify the welding joints in their manufacturing drawing that will be prepared by MRR.
4. After processing, perform degreasing cleaning.

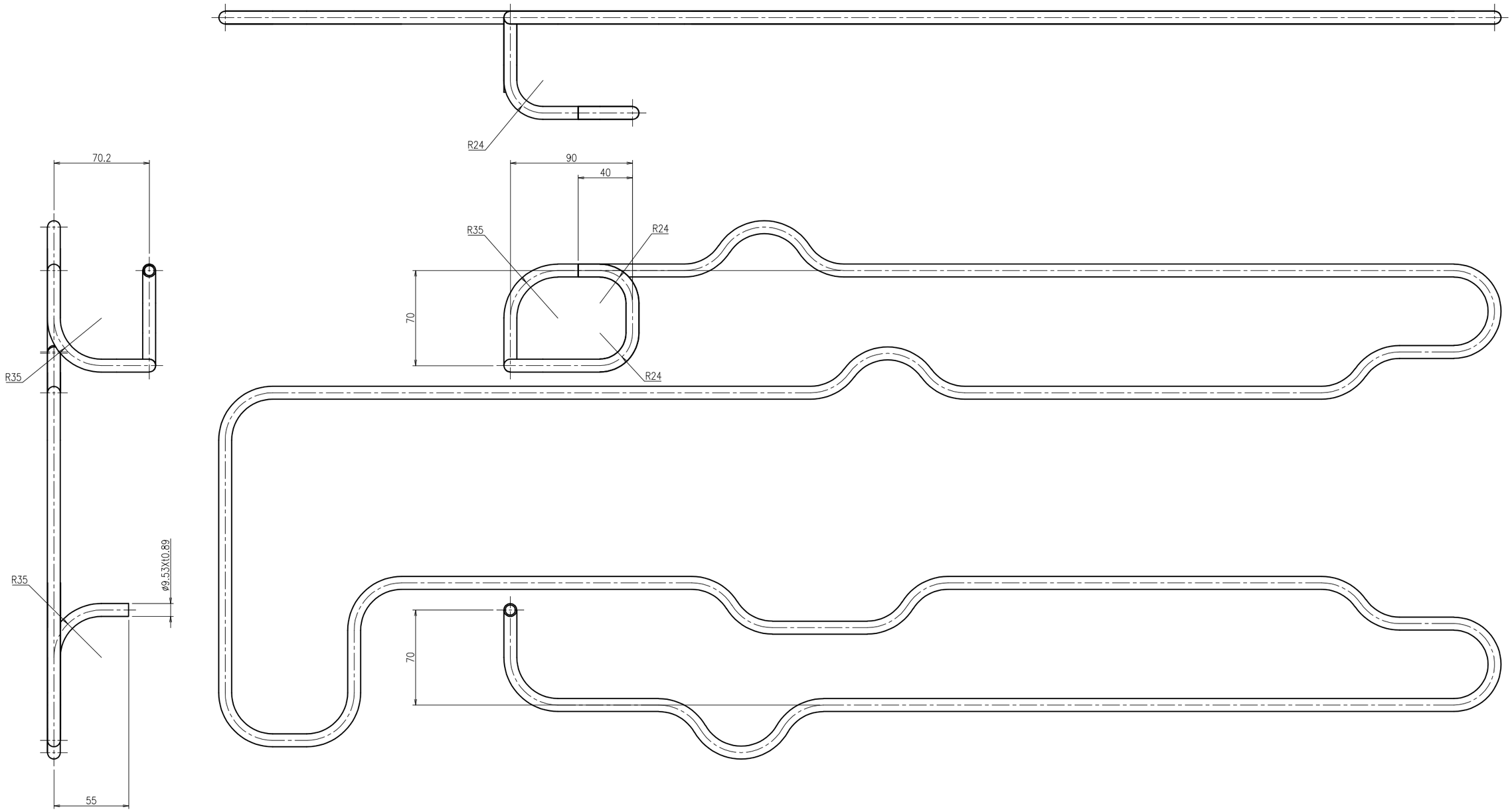

REMARKS		APPROVED	REVIEWED	DRAWN	DATE 2021.11.30	PBS TITLE Diagnostics Poloidal Polarimeter	PROJECTION	SIZE A3
	QST National Institutes for Quantum and Radiological Science and Technology				SCALE 1 : 3	DRAWING TITLE UEMM_SECOND_BASE_PIPING	DRAWING NO. JADA-55342DW0100	SHEET NO. U-09 / REVISION 0

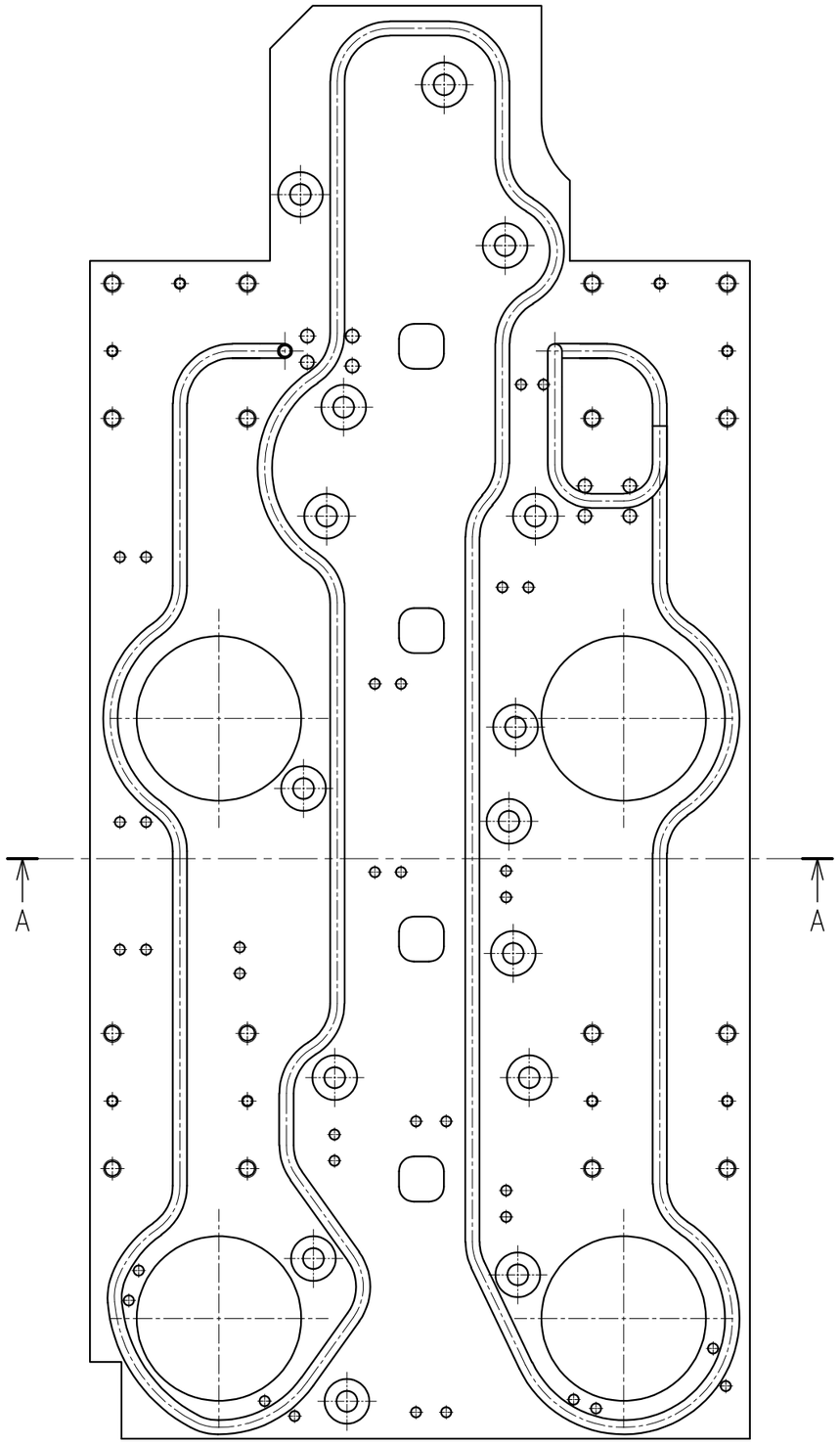

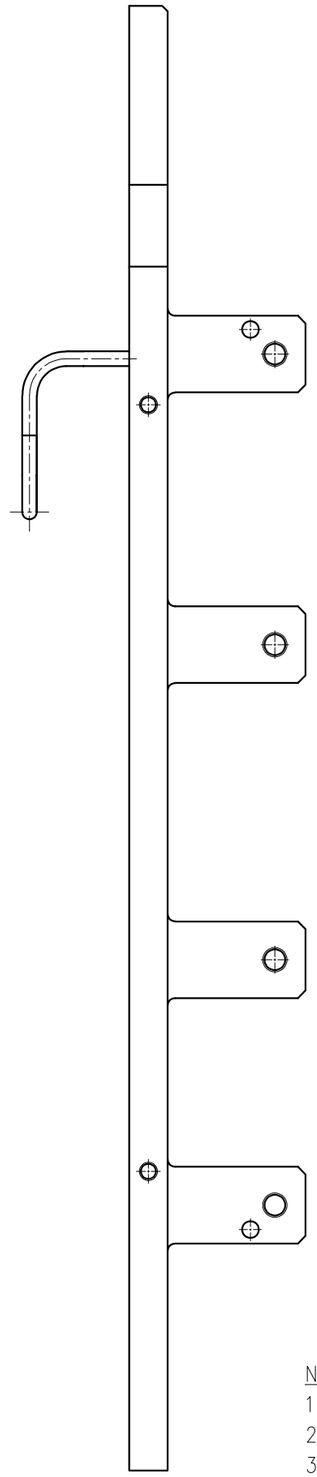

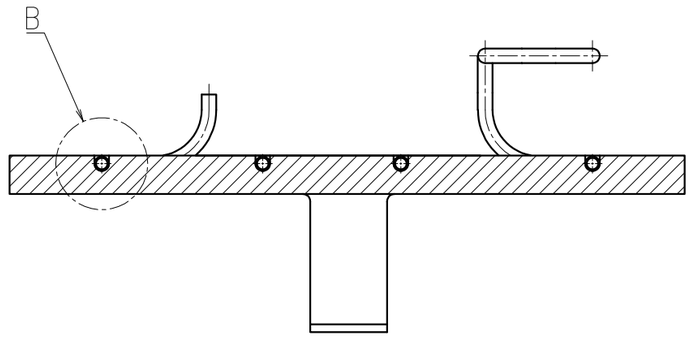

Sectional view A–A

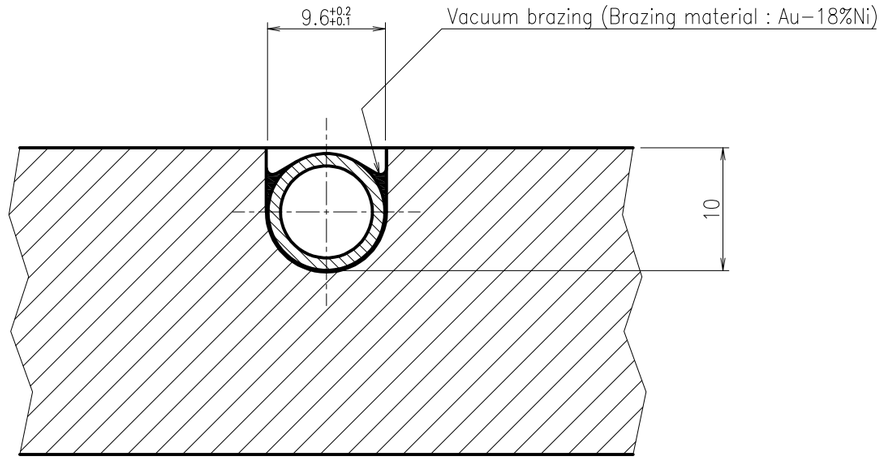

Detail B (2:1)

NOTE

1. This drawing shows the brazing process of piping to the first base plate of the UEMM.
2. The base plate drawing is shown on sheet number U–01 and the piping drawing is shown on sheet number U–01.
3. After processing, perform degreasing cleaning.

REMARKS		APPROVED	REVIEWED	DRAWN	DATE 2021.11.30	PBS TITLE Diagnostics Poloidal Polarimeter		PROJECTION	SIZE A3
	QST National Institutes for Quantum and Radiological Science and Technology				SCALE 1 : 4	DRAWING TITLE UEMM_FIRST_BASE_PLATE_BRAZING	DRAWING NO. JADA-55342DW0100	SHEET NO. U-10	REVISION 0

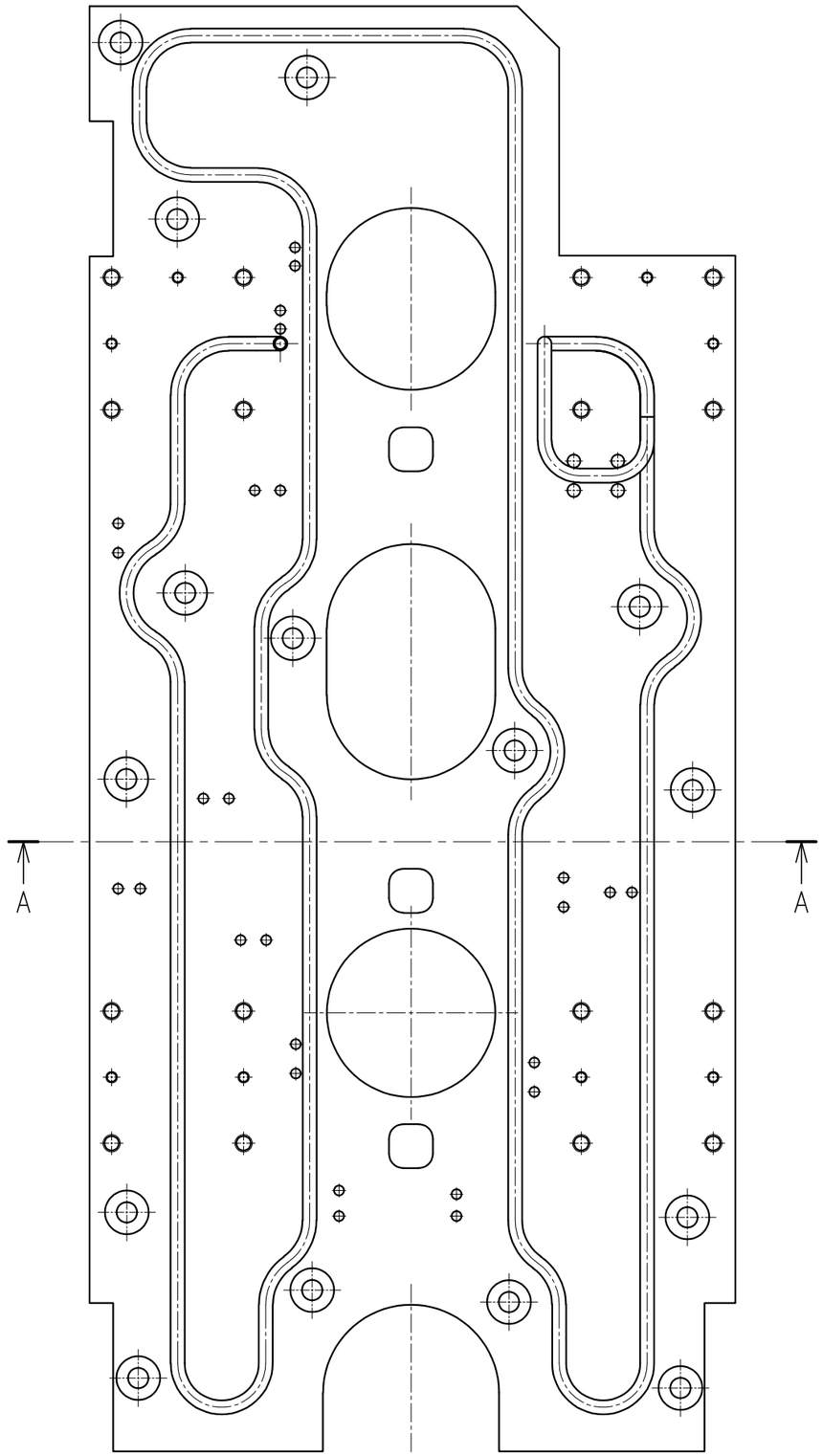

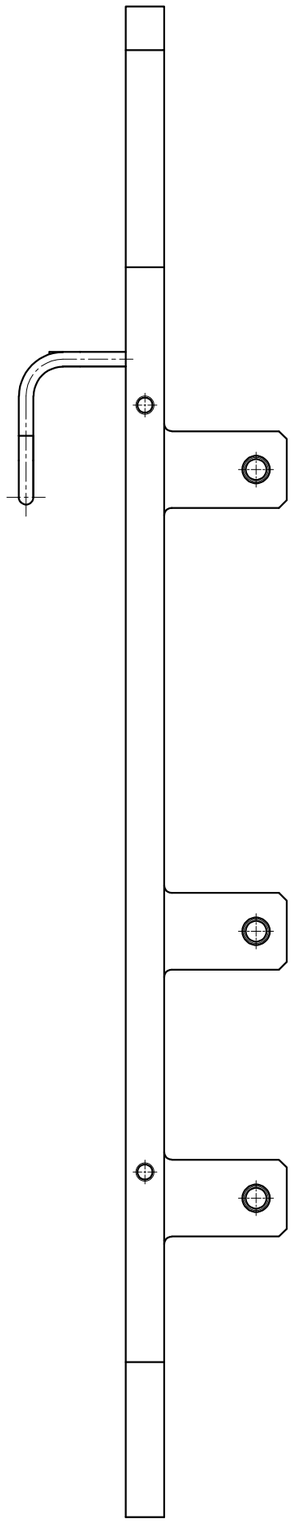

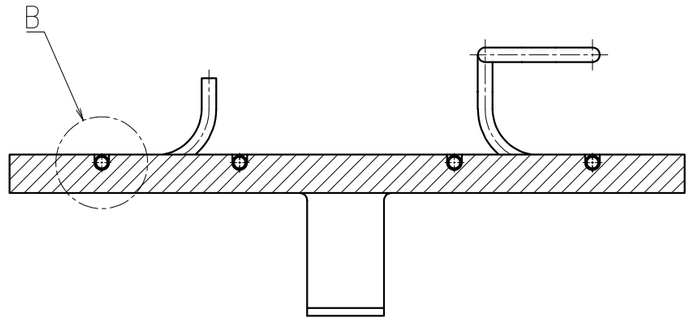

Sectional view A–A

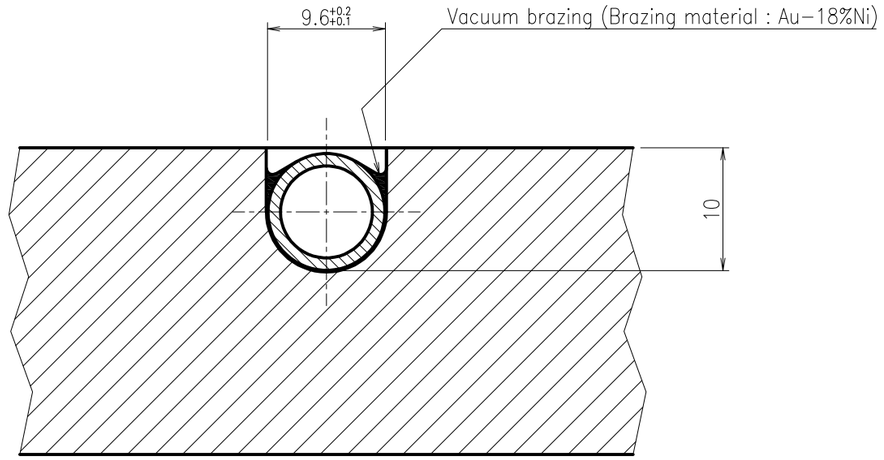

Detail B (2:1)

NOTE

1. This drawing shows the brazing process of piping to the second base plate of the UEMM.
2. The base plate drawing is shown on sheet number U–01 and the piping drawing is shown on sheet number U–01.
3. After processing, perform degreasing cleaning.

REMARKS		APPROVED	REVIEWED	DRAWN	DATE	PBS TITLE		PROJECTION	SIZE
	QST National Institutes for Quantum and Radiological Science and Technology				2021.11.30	Diagnostics Poloidal Polarimeter			A3
					SCALE 1 : 4	DRAWING TITLE UEMM_SECOND_BASE_PLATE_BRAZING	DRAWING NO. JADA-55342DW0100	SHEET NO. U-11	REVISION 0

No.	Name	Material	Quantity	Remarks
1	TUNGSTEN_FIRST_MIRROR	Tungsten	1	SHEET NO.U-22
2	MIRROR_MOUNT (M1E1)	SS316LN-IG, CuCrZr	1set	SHEET NO.U-23
3	HEXAGON_SOCKET_HEAD_SCREW	ALLOY625	8	M10×L32 (with φ2 degassing hole)
4	SQUARE_WASHER	ALLOY625	8	SHEET NO.U-49

NOTE

1. This drawing shows the assembly drawing of the first mirror (M1E1) of the UEMM.

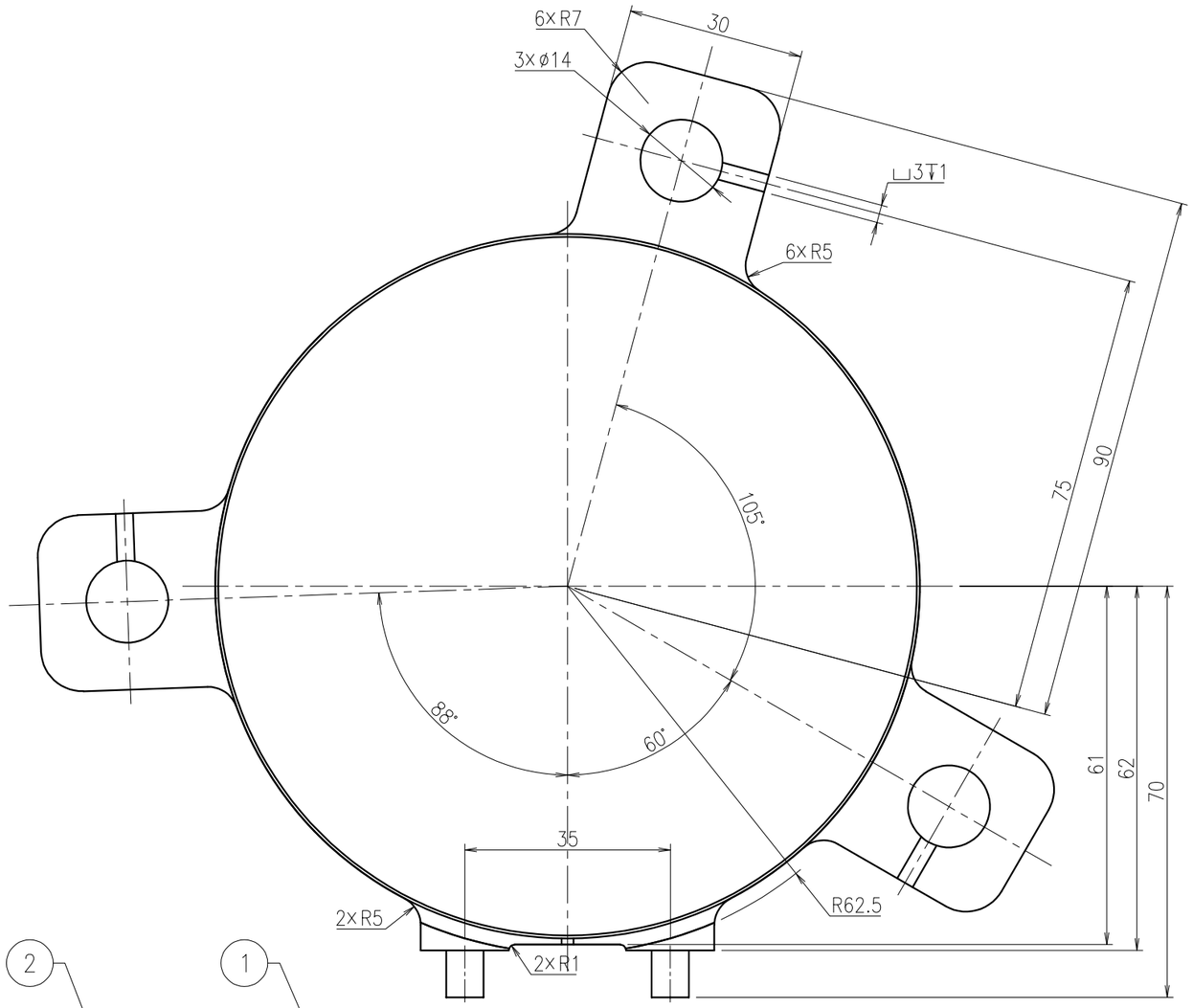

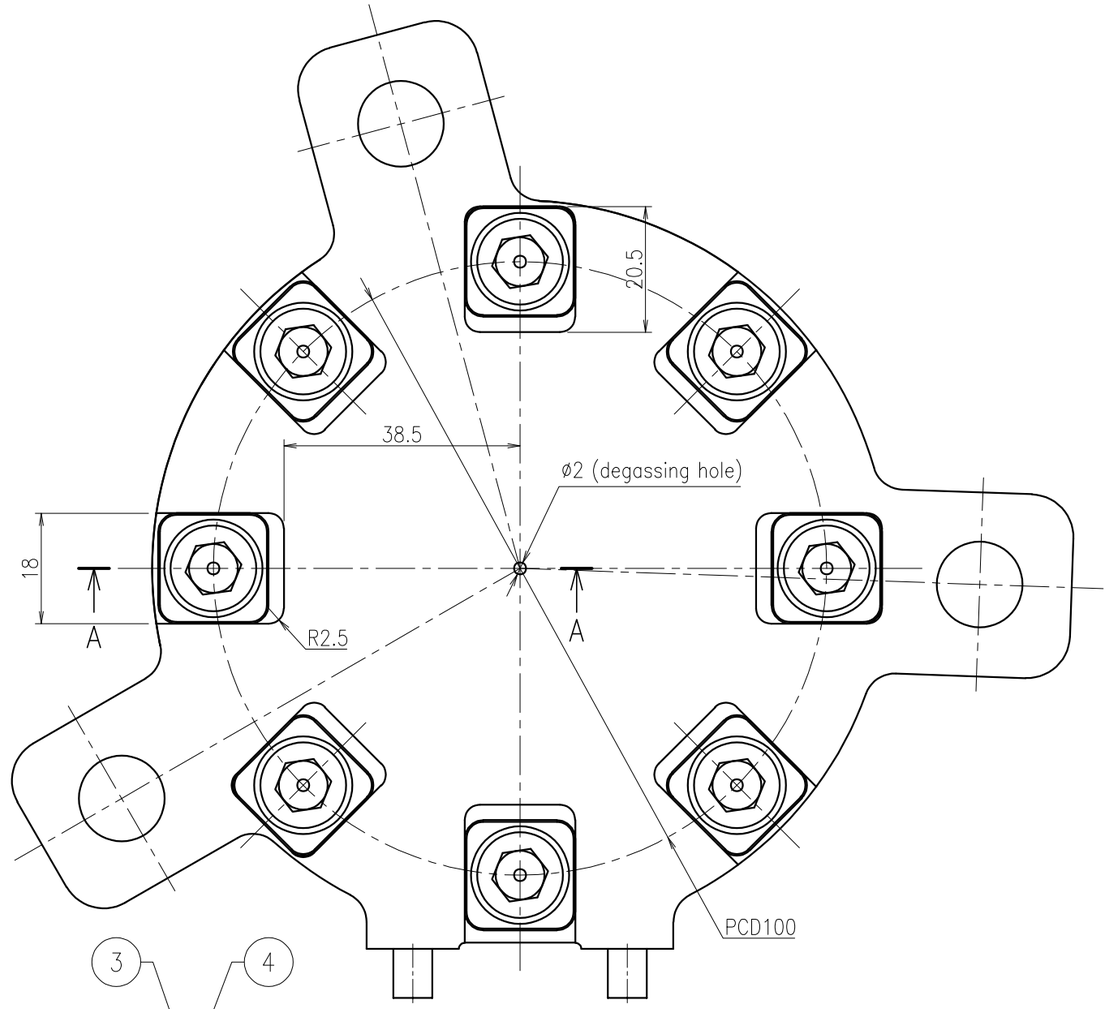

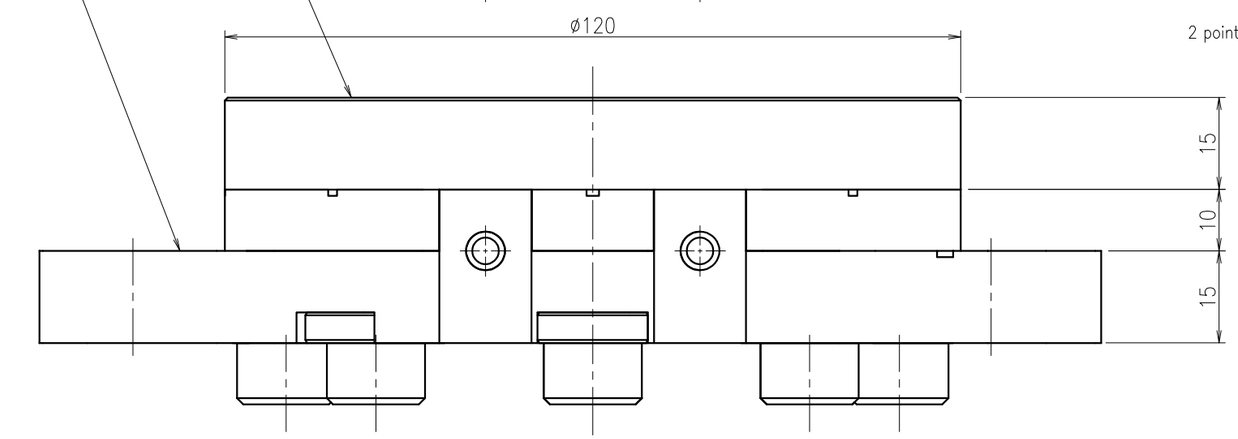

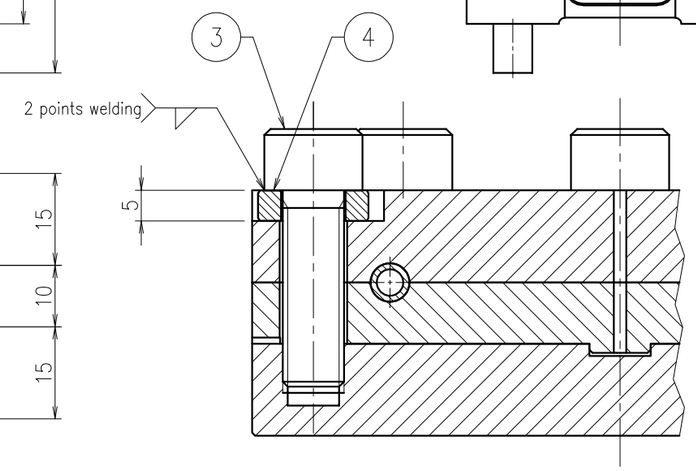

Sectional view A–A

REMARKS		APPROVED	REVIEWED	DRAWN	DATE 2021.11.30	PBS TITLE Diagnostics Poloidal Polarimeter		PROJECTION	SIZE A3
	QST National Institutes for Quantum and Radiological Science and Technology				SCALE 1 : 1	DRAWING TITLE FIRST_MIRROR_ASSEMBLY(M1E1)	DRAWING NO. JADA-55342DW0100	SHEET NO. U-12	REVISION 0

No.	Name	Material	Quantity	Remarks
1	TUNGSTEN_FIRST_MIRROR	Tungsten	1	SHEET NO.U-22
2	MIRROR_MOUNT (M1E5)	SS316LN-IG, CuCrZr	1set	SHEET NO.U-24
3	HEXAGON_SOCKET_HEAD_SCREW	ALLOY625	8	M10×L32 (with φ2 degassing hole)
4	SQUARE_WASHER	ALLOY625	8	SHEET NO.U-49

NOTE

1. This drawing shows the assembly drawing of the first mirror (M1E5) of the UEMM.

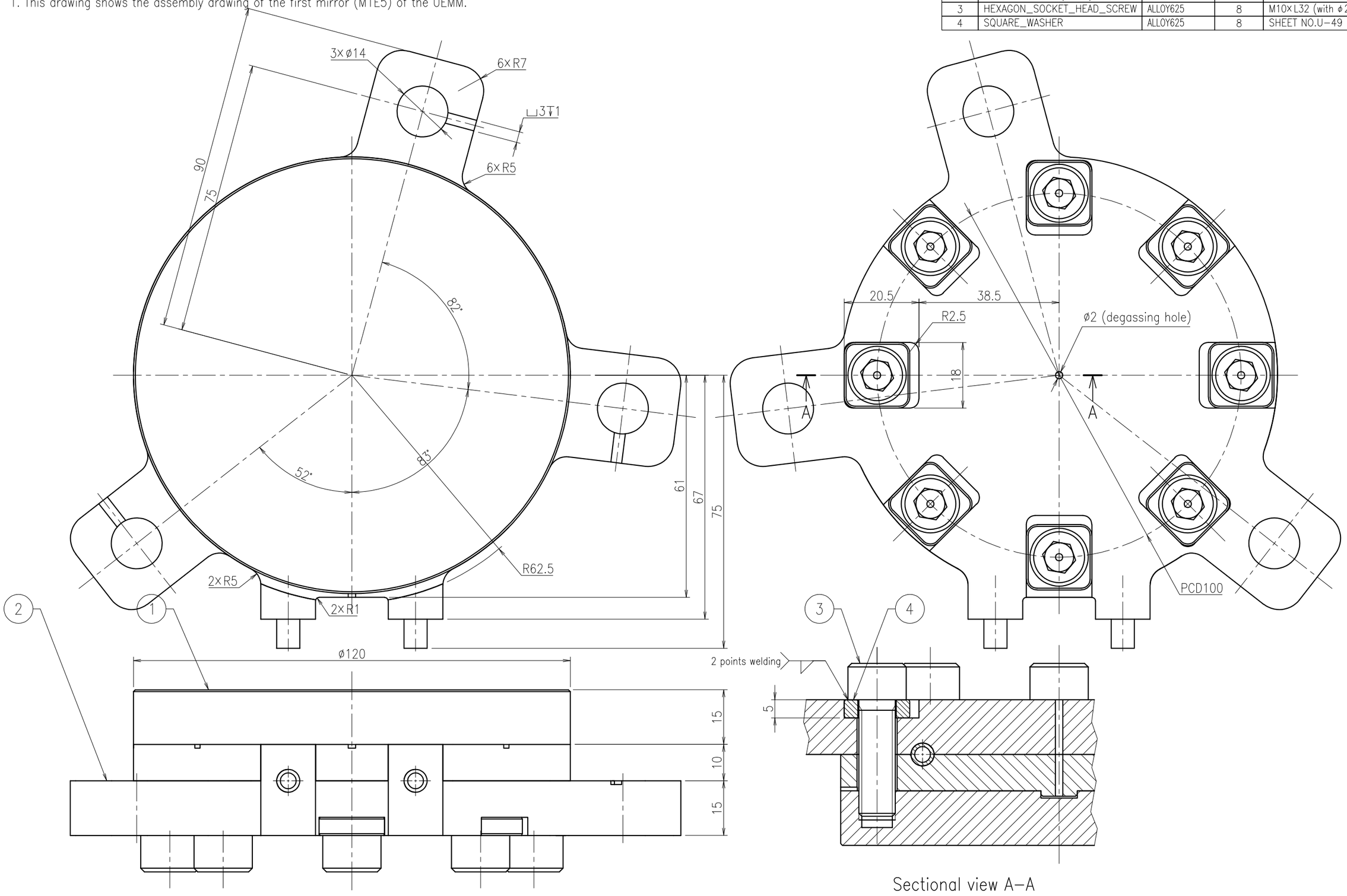

REMARKS		APPROVED	REVIEWED	DRAWN	DATE 2021.11.30	PBS TITLE Diagnostics Poloidal Polarimeter	PROJECTION	SIZE A3
	QST National Institutes for Quantum and Radiological Science and Technology				SCALE 1 : 1	DRAWING TITLE FIRST_MIRROR_ASSEMBLY(M1E5)	DRAWING NO. JADA-55342DW0100	SHEET NO. U-13 / REVISION 0

No.	Name	Material	Quantity	Remarks
1	TUNGSTEN_FIRST_MIRROR	Tungsten	1	SHEET NO.U−22
2	MIRROR_MOUNT (M1E6)	SS316LN-IG, CuCrZr	1set	SHEET NO.U−25
3	HEXAGON_SOCKET_HEAD_SCREW	ALLOY625	8	M10×L32 (with φ2 degassing hole)
4	SQUARE_WASHER	ALLOY625	8	SHEET NO.U−49

NOTE

1. This drawing shows the assembly drawing of the first mirror (M1E6) of the UEMM.

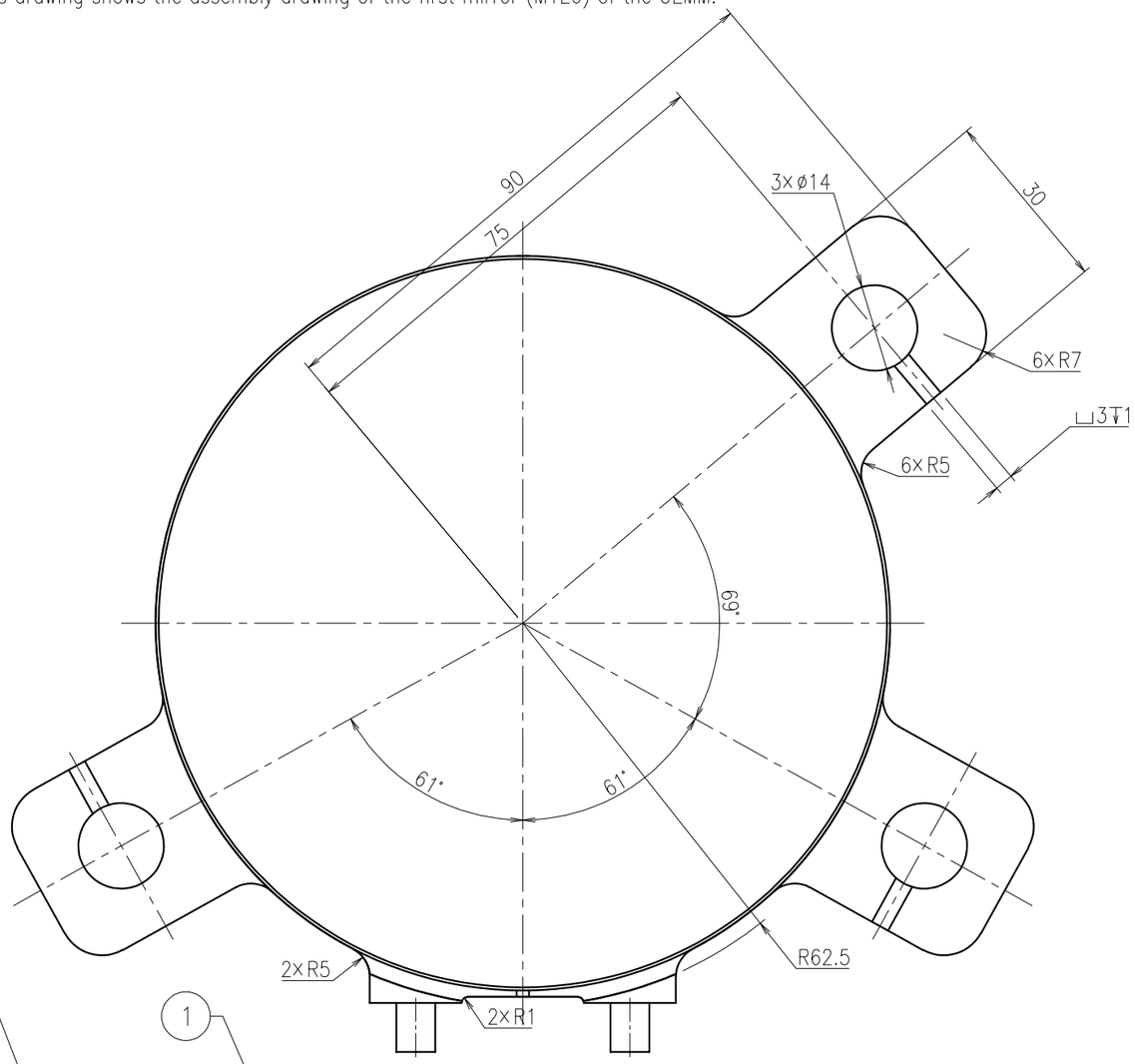

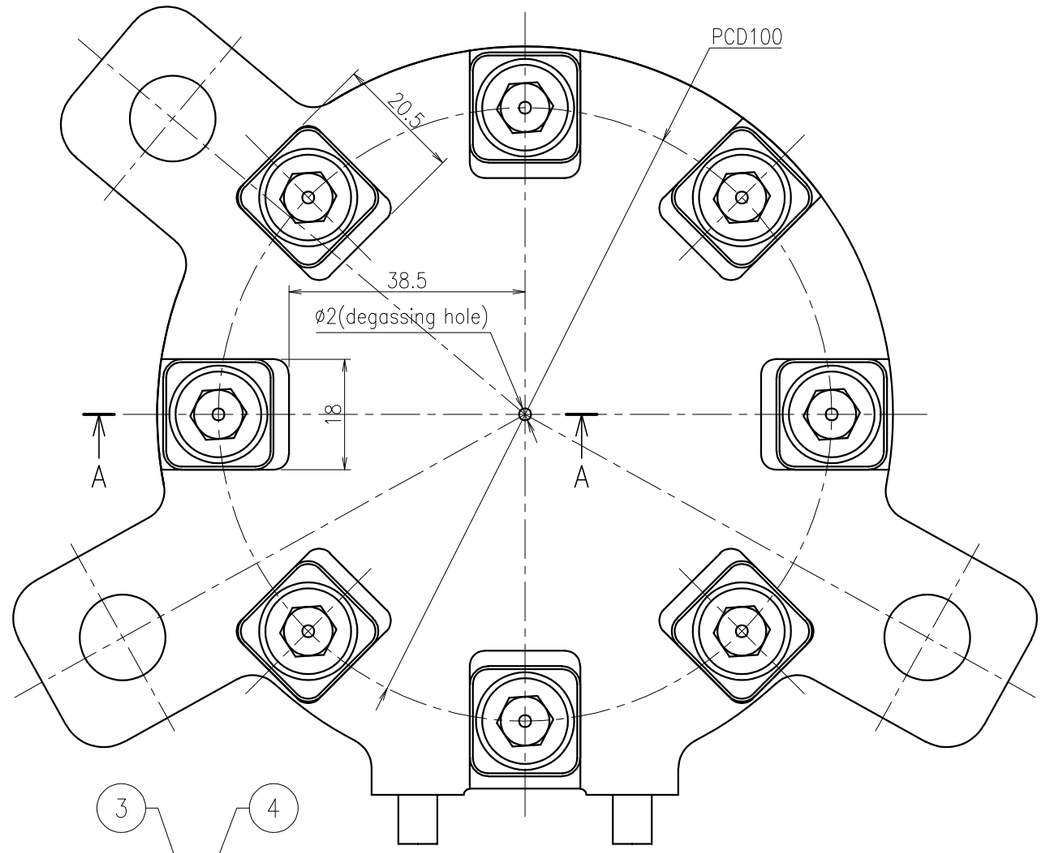

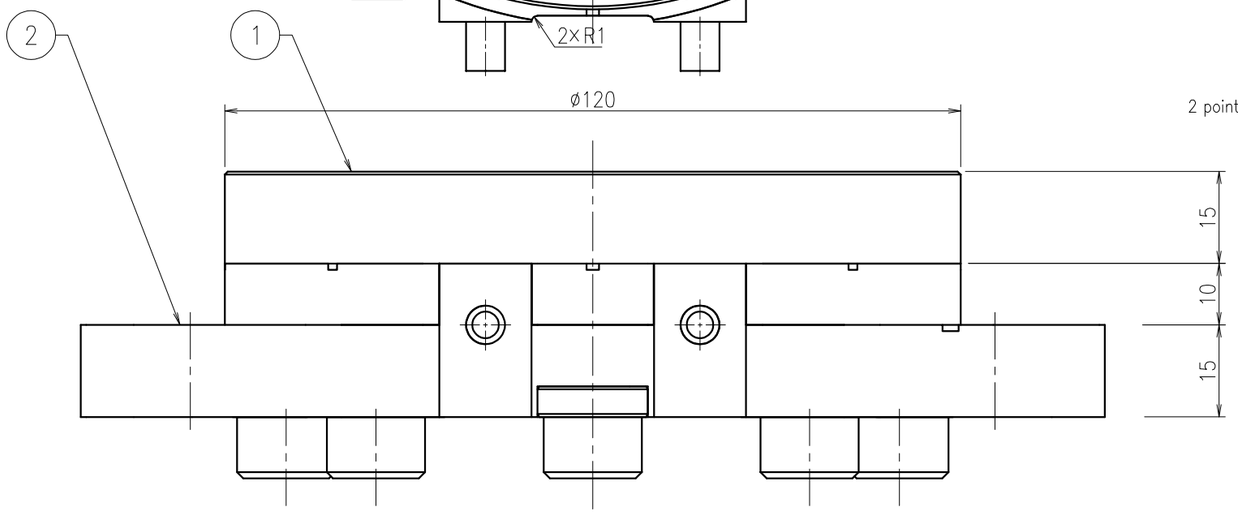

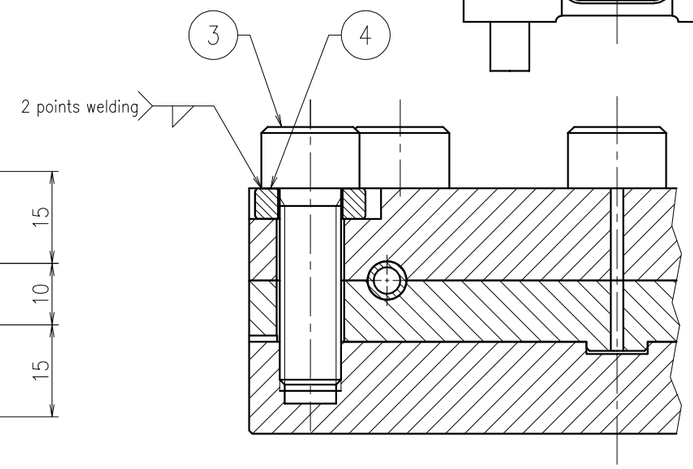

Sectional view A−A

REMARKS		APPROVED	REVIEWED	DRAWN	DATE 2021.11.30	PBS TITLE Diagnostics Poloidal Polarimeter		PROJECTION	SIZE A3
	QST National Institutes for Quantum and Radiological Science and Technology				SCALE 1 : 1	DRAWING TITLE FIRST_MIRROR_ASSEMBLY(M1E6)	DRAWING NO. JADA-55342DW0100	SHEET NO. U-14	REVISION 0

No.	Name	Material	Quantity	Remarks
1	TUNGSTEN_FIRST_MIRROR	Tungsten	1	SHEET NO.U−22
2	MIRROR_MOUNT (M1E7)	SS316LN-IG, CuCrZr	1set	SHEET NO.U−26
3	HEXAGON_SOCKET_HEAD_SCREW	ALLOY625	8	M10×L32 (with ϕ2 degassing hole)
4	SQUARE_WASHER	ALLOY625	8	SHEET NO.U−49

NOTE

1. This drawing shows the assembly drawing of the first mirror (M1E7) of the UEMM.

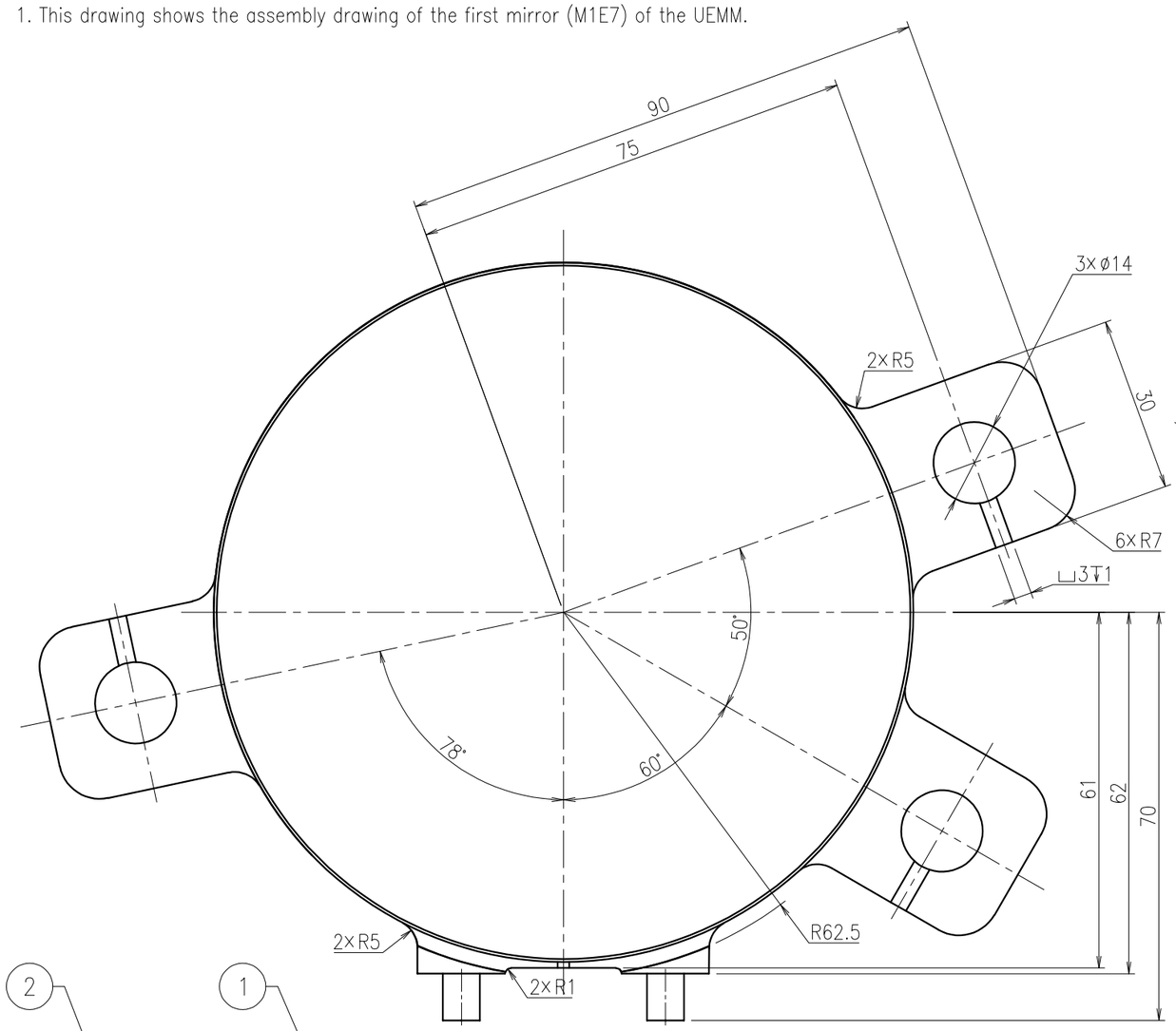

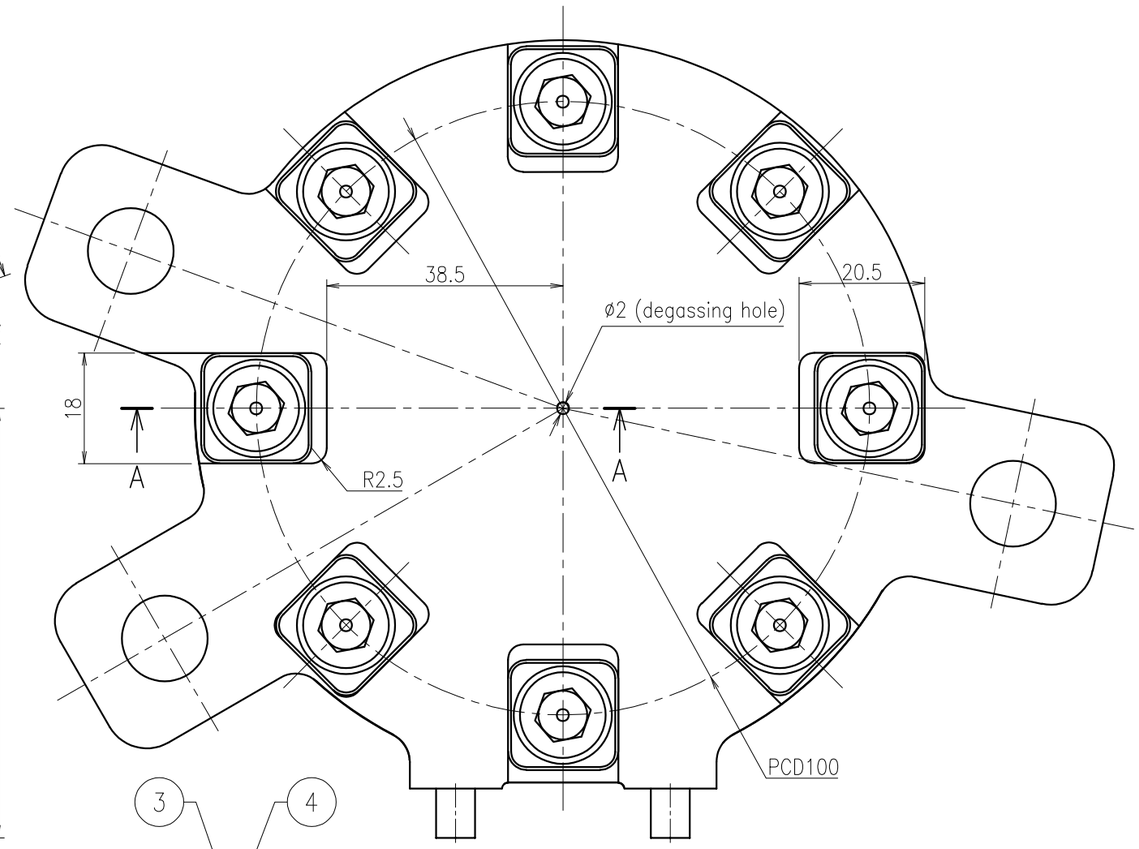

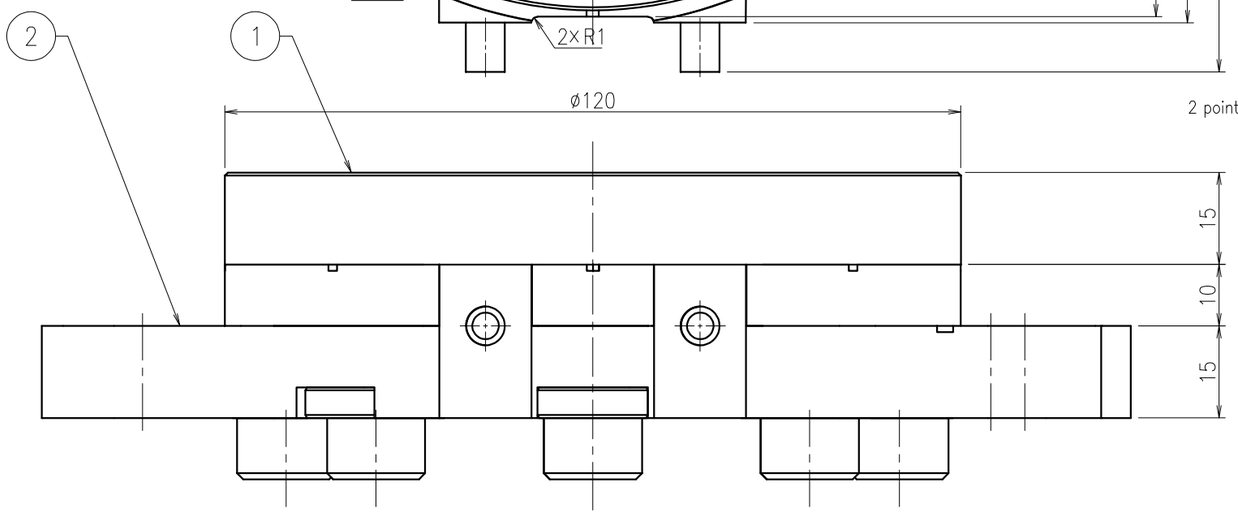

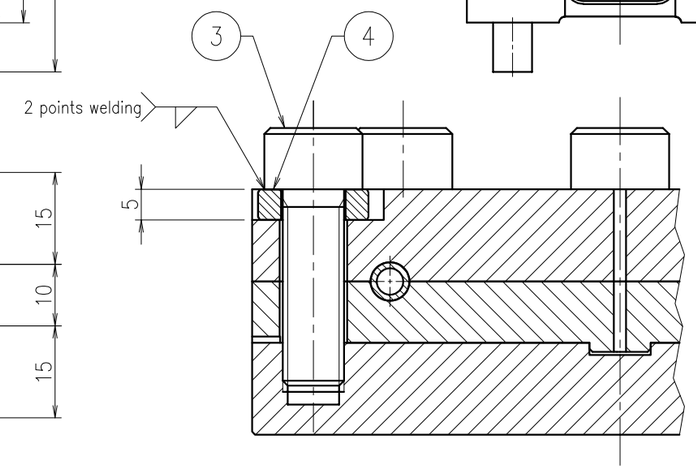

Sectional view A−A

REMARKS		APPROVED	REVIEWED	DRAWN	DATE	PBS TITLE		PROJECTION	SIZE
	QST National Institutes for Quantum and Radiological Science and Technology				2021.11.30	Diagnostics Poloidal Polarimeter			A3
					SCALE 1 : 1	DRAWING TITLE FIRST_MIRROR_ASSEMBLY(M1E7)	DRAWING NO. JADA-55342DW0100	SHEET NO. U-15	REVISION 0

NOTE

1. This drawing shows the assembly drawing of the first mirror (M1E8) of the UEMM.

No.	Name	Material	Quantity	Remarks
1	TUNGSTEN_FIRST_MIRROR	Tungsten	1	SHEET NO.U-22
2	MIRROR_MOUNT (M1E8)	SS316LN-IG, CuCrZr	1set	SHEET NO.U-27
3	HEXAGON_SOCKET_HEAD_SCREW	ALLOY625	8	M10×L32 (with ϕ2 degassing hole)
4	SQUARE_WASHER	ALLOY625	8	SHEET NO.U-49

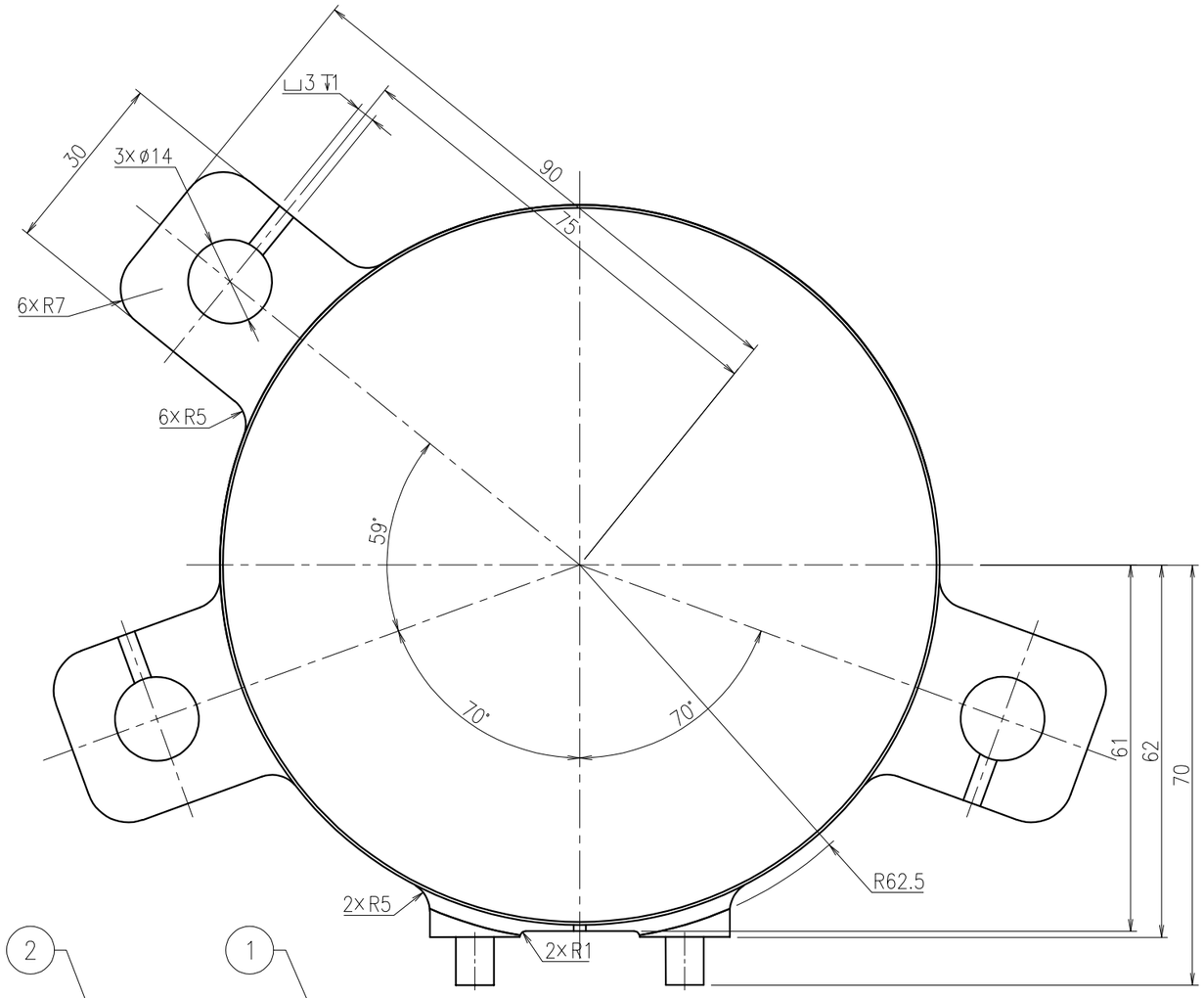

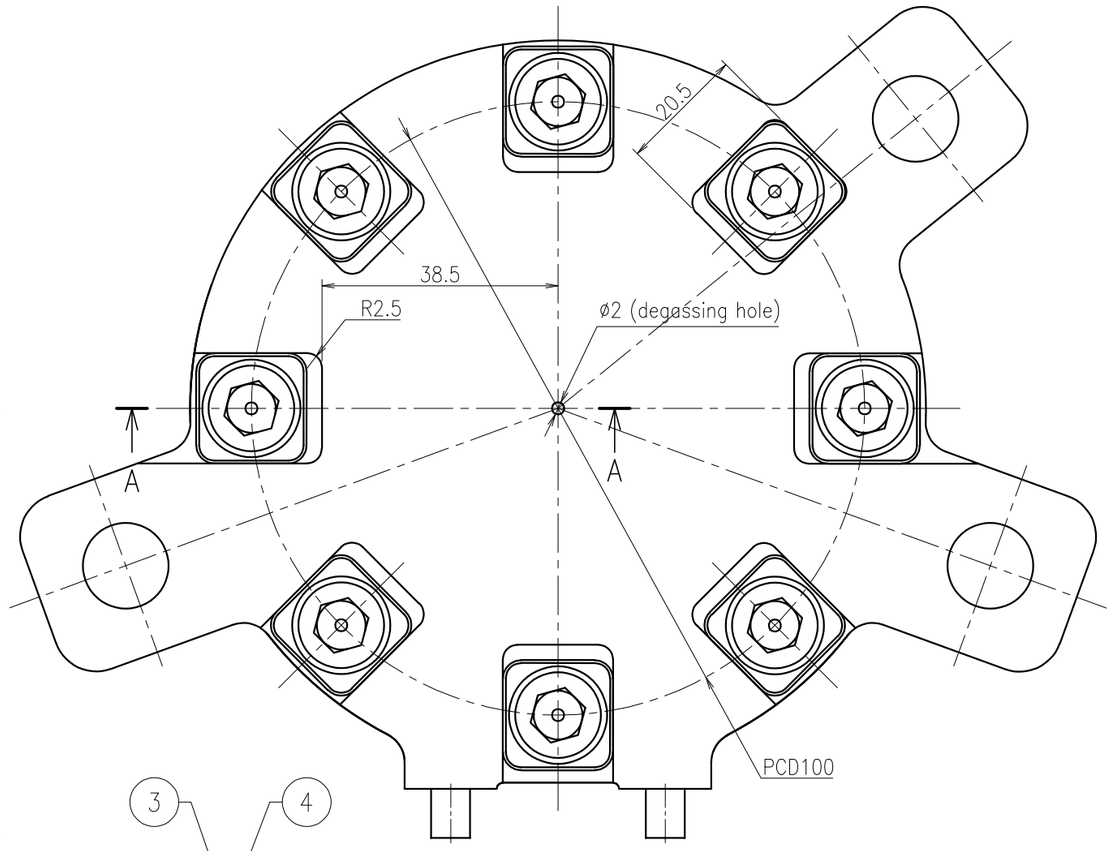

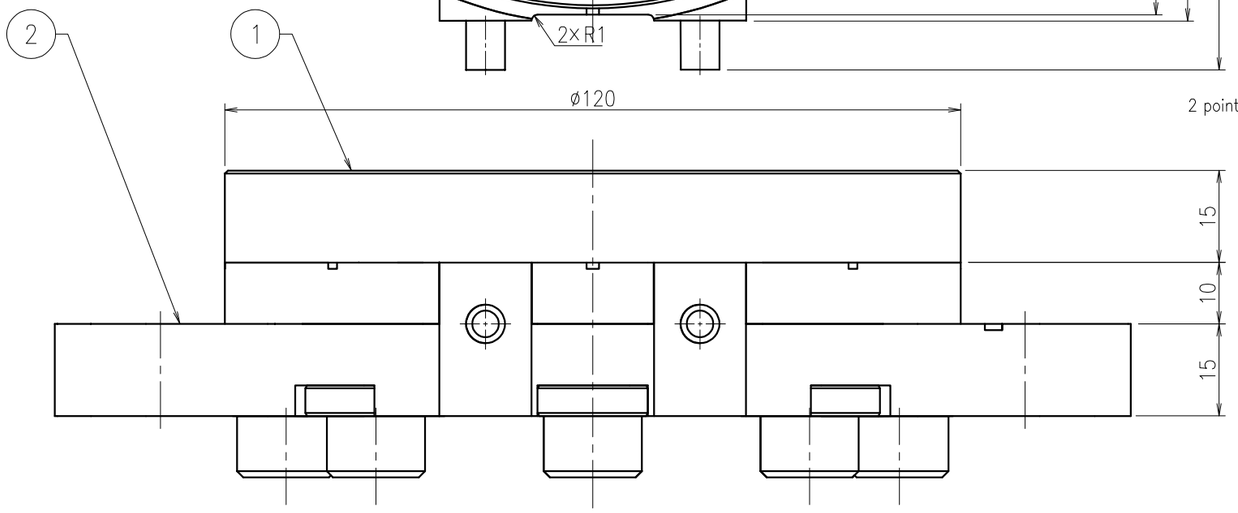

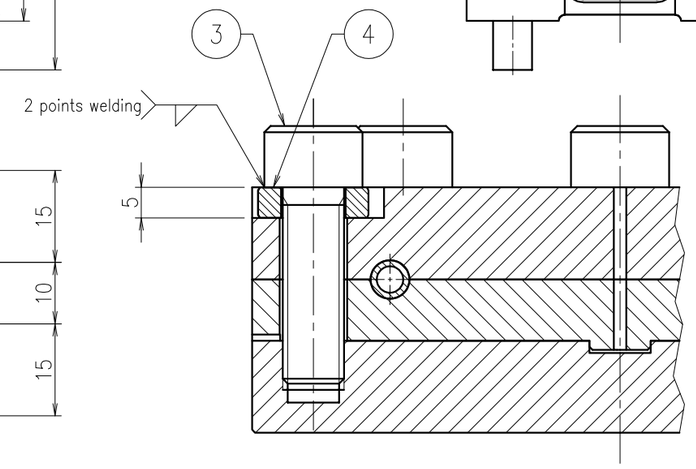

Sectional view A–A

REMARKS		APPROVED	REVIEWED	DRAWN	DATE 2021.11.30	PBS TITLE Diagnostics Poloidal Polarimeter		PROJECTION	SIZE A3
	QST National Institutes for Quantum and Radiological Science and Technology				SCALE 1 : 1	DRAWING TITLE FIRST_MIRROR_ASSEMBLY(M1E8)	DRAWING NO. JADA-55342DW0100	SHEET NO. U-16	REVISION 0

No.	Name	Material	Quantity	Remarks
1	TUNGSTEN_SECOND_MIRROR	Tungsten	1	SHEET NO.U−22
2	MIRROR_MOUNT (M2E1)	SS316LN-IG, CuCrZr	1set	SHEET NO.U−28
3	HEXAGON_SOCKET_HEAD_SCREW	ALLOY625	8	M10×L32 (with φ2 degassing hole)
4	SQUARE_WASHER	ALLOY625	8	SHEET NO.U−49

NOTE

1. This drawing shows the assembly drawing of the second mirror (M2E1) of the UEMM.

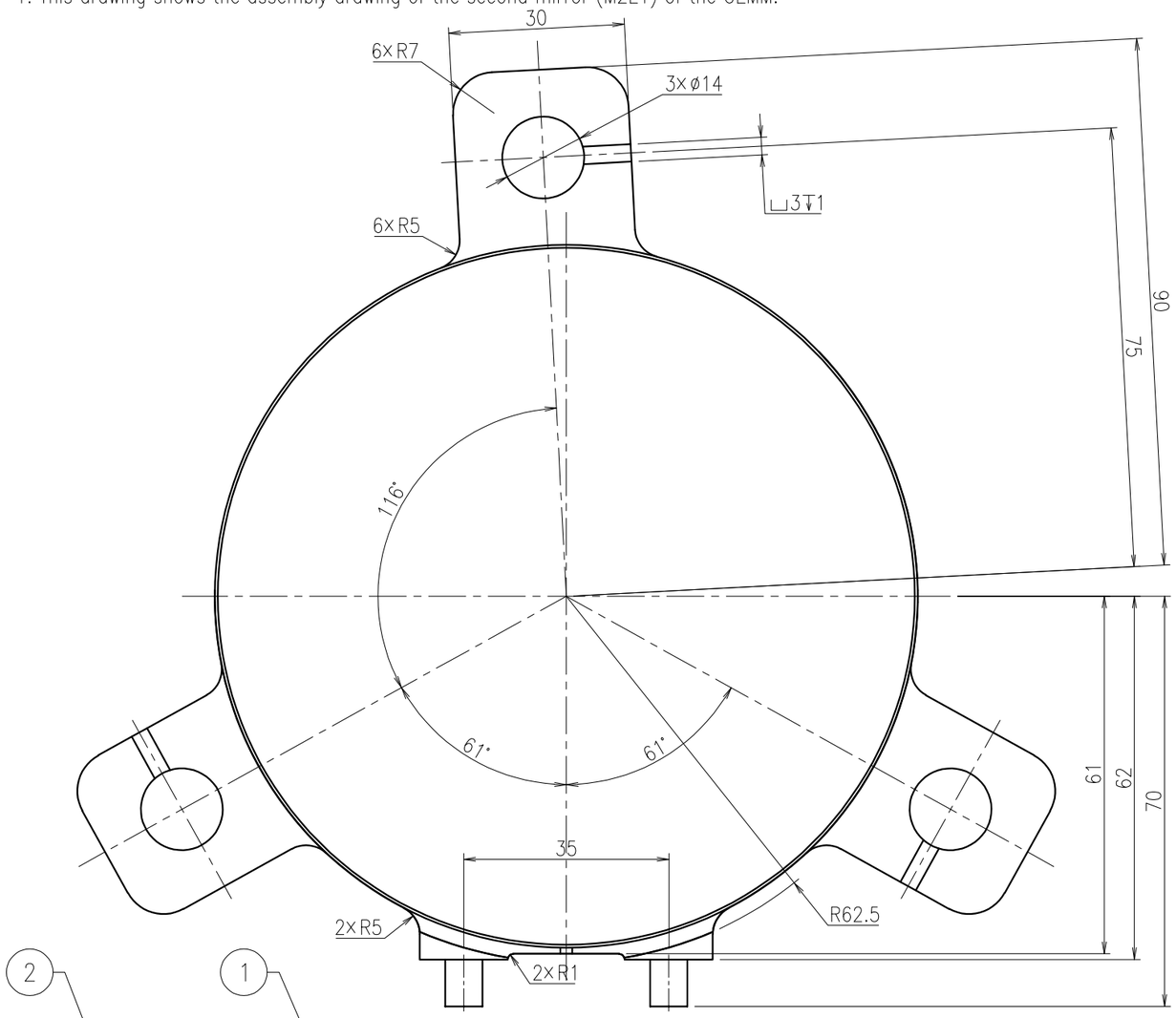

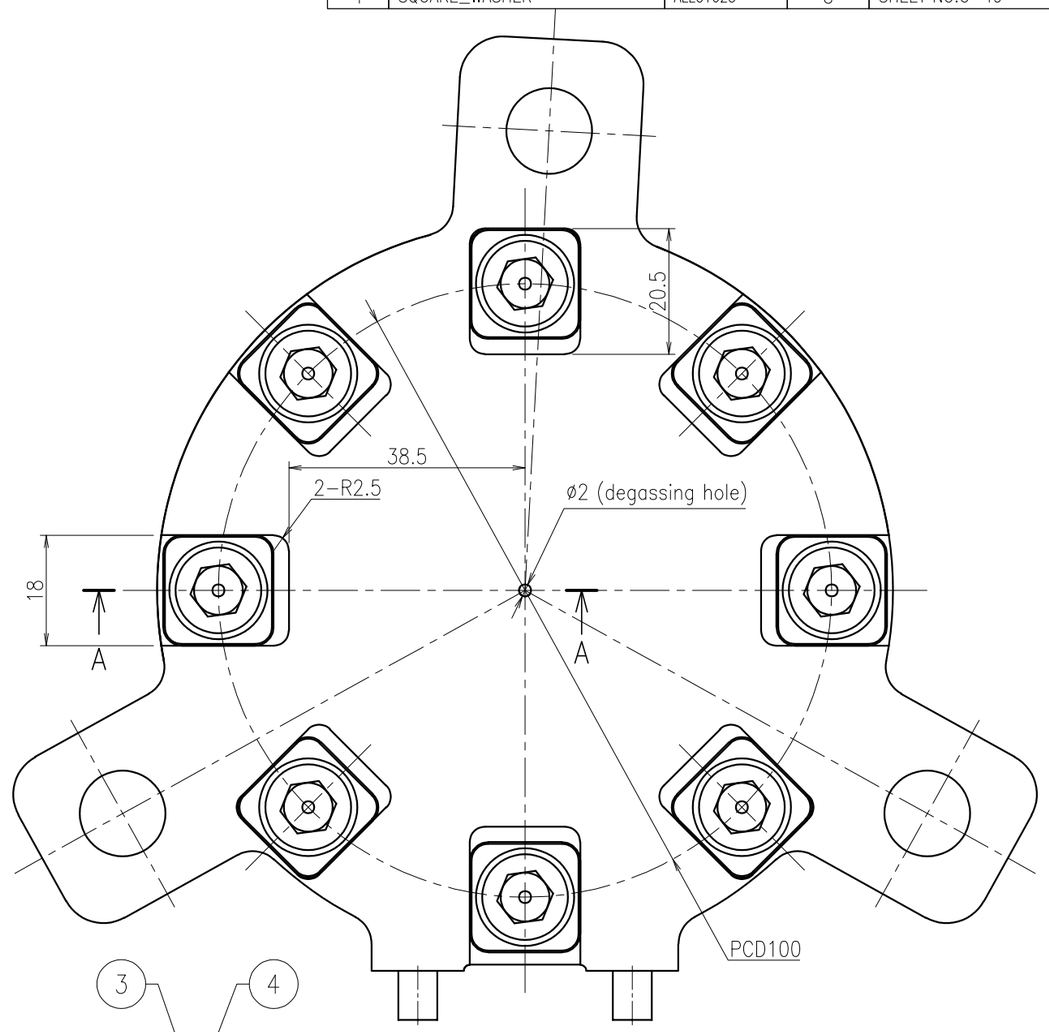

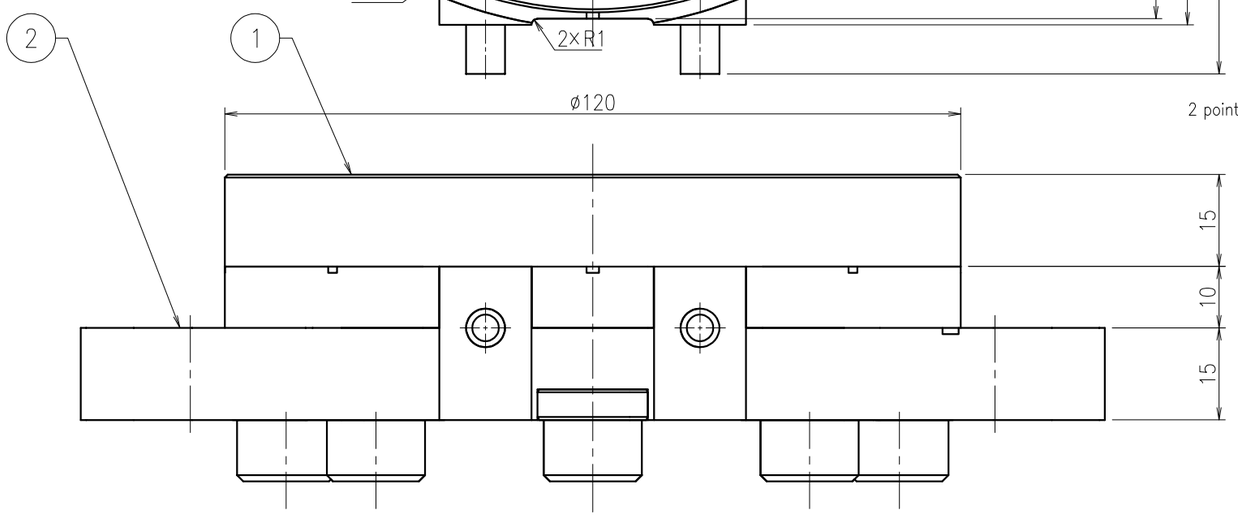

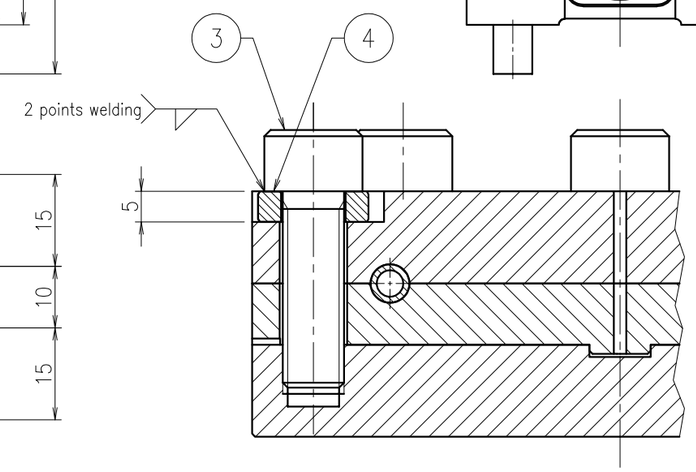

Sectional view A−A

REMARKS		APPROVED	REVIEWED	DRAWN	DATE 2021.11.30	PBS TITLE Diagnostics Poloidal Polarimeter	PROJECTION	SIZE A3
	QST National Institutes for Quantum and Radiological Science and Technology				SCALE 1 : 1	DRAWING TITLE SECOND_MIRROR_ASSEMBLY(M2E1)	DRAWING NO. JADA-55342DW0100	SHEET NO. U-17 / REVISION 0

NOTE

1. This drawing shows the assembly drawing of the second mirror (M2E5) of the UEMM.

No.	Name	Material	Quantity	Remarks
1	TUNGSTEN_SECOND_MIRROR	Tungsten	1	SHEET NO.U-22
2	MIRROR_MOUNT (M2E5)	SS316LN-IG, CuCrZr	1set	SHEET NO.U-29
3	HEXAGON_SOCKET_HEAD_SCREW	ALLOY625	8	M10×L32 (with φ2 degassing hole)
4	SQUARE_WASHER	ALLOY625	8	SHEET NO.U-49

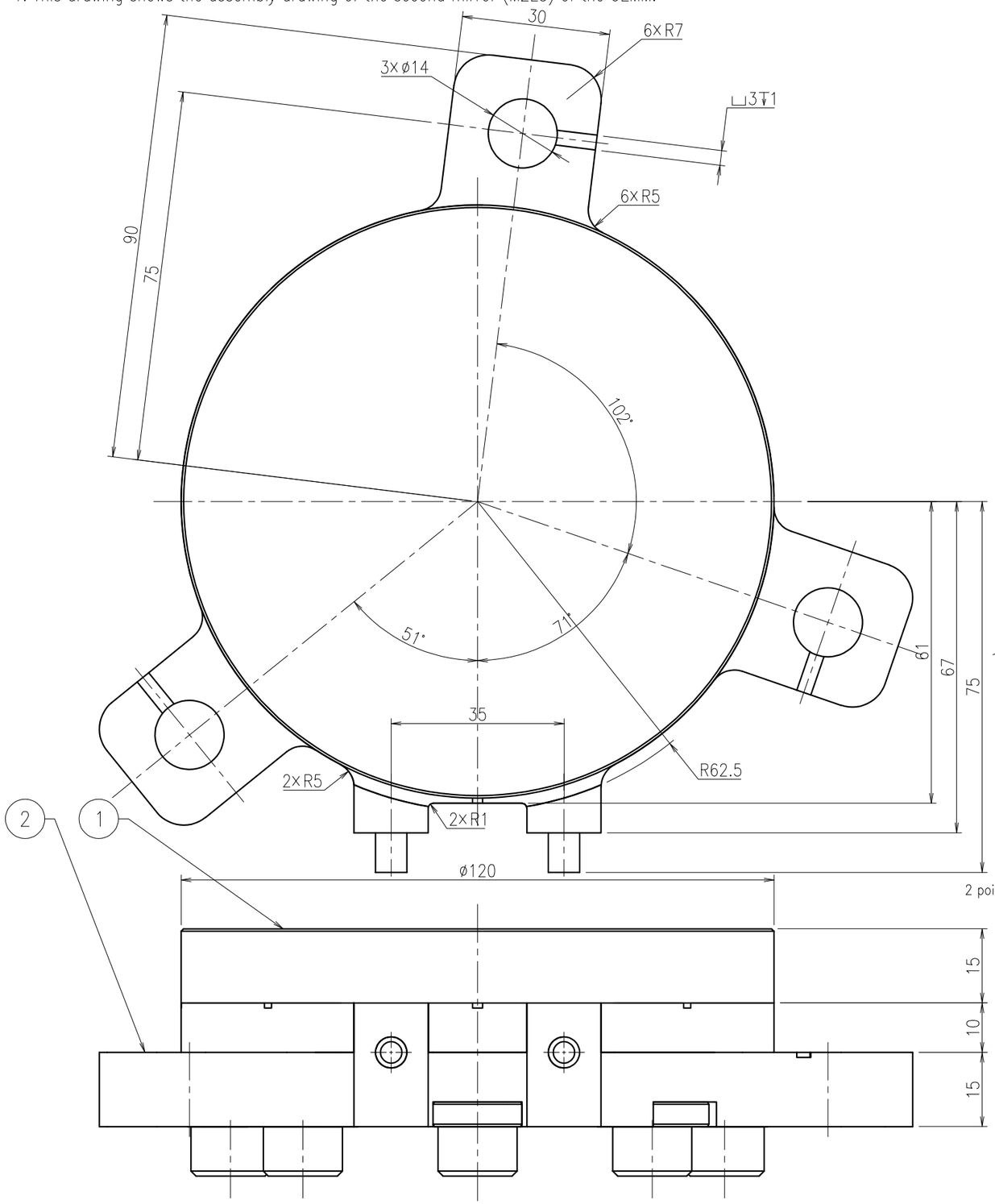

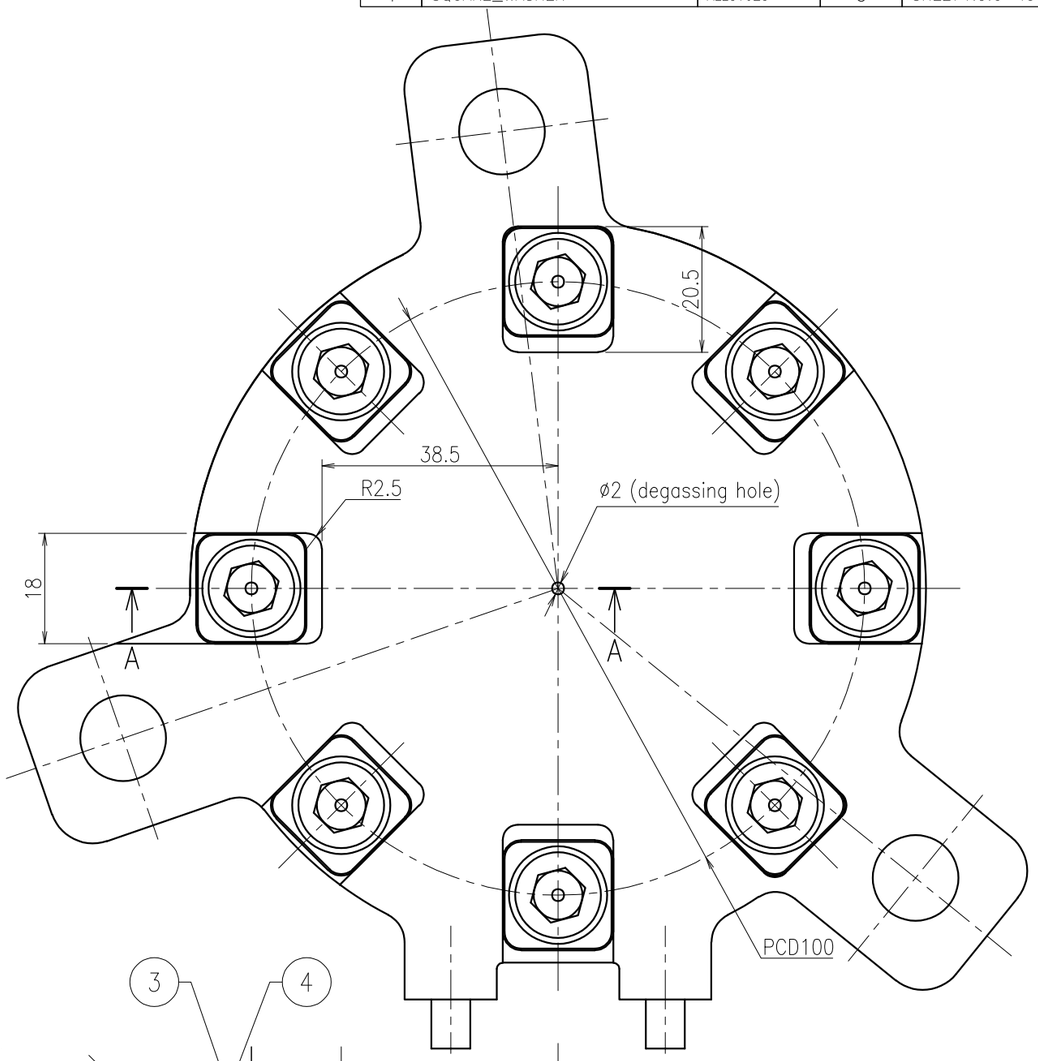

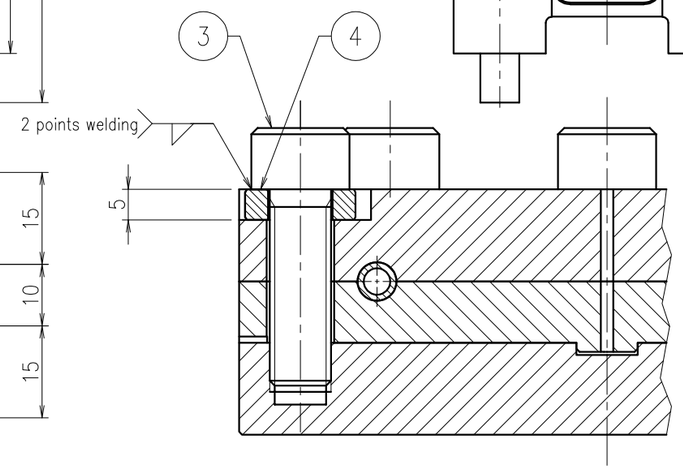

Sectional view A–A

REMARKS		APPROVED	REVIEWED	DRAWN	DATE 2021.11.30	PBS TITLE Diagnostics Poloidal Polarimeter	PROJECTION	SIZE A3
	QST National Institutes for Quantum and Radiological Science and Technology				SCALE 1 : 1	DRAWING TITLE SECOND_MIRROR_ASSEMBLY(M2E5)	DRAWING NO. JADA-55342DW0100	SHEET NO. U-18 / REVISION 0

No.	Name	Material	Quantity	Remarks
1	TUNGSTEN_SECOND_MIRROR	Tungsten	1	SHEET NO.U−22
2	MIRROR_MOUNT (M2E6)	SS316LN-IG, CuCrZr	1set	SHEET NO.U−30
3	HEXAGON_SOCKET_HEAD_SCREW	ALLOY625	8	M10×L32 (with ϕ2 degassing hole)
4	SQUARE_WASHER	ALLOY625	8	SHEET NO.U−49

NOTE

1. This drawing shows the assembly drawing of the second mirror (M2E6) of the UEMM.

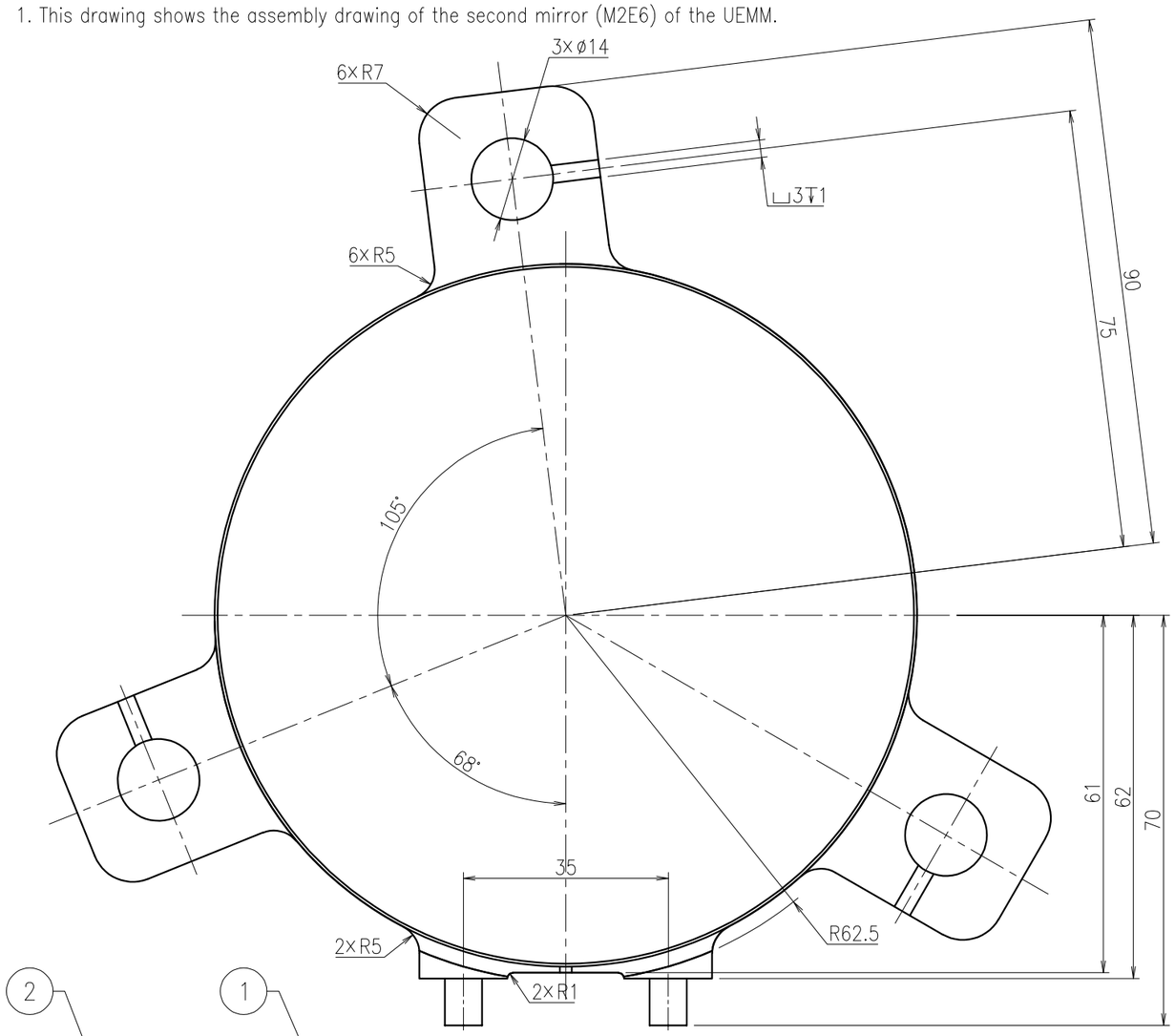

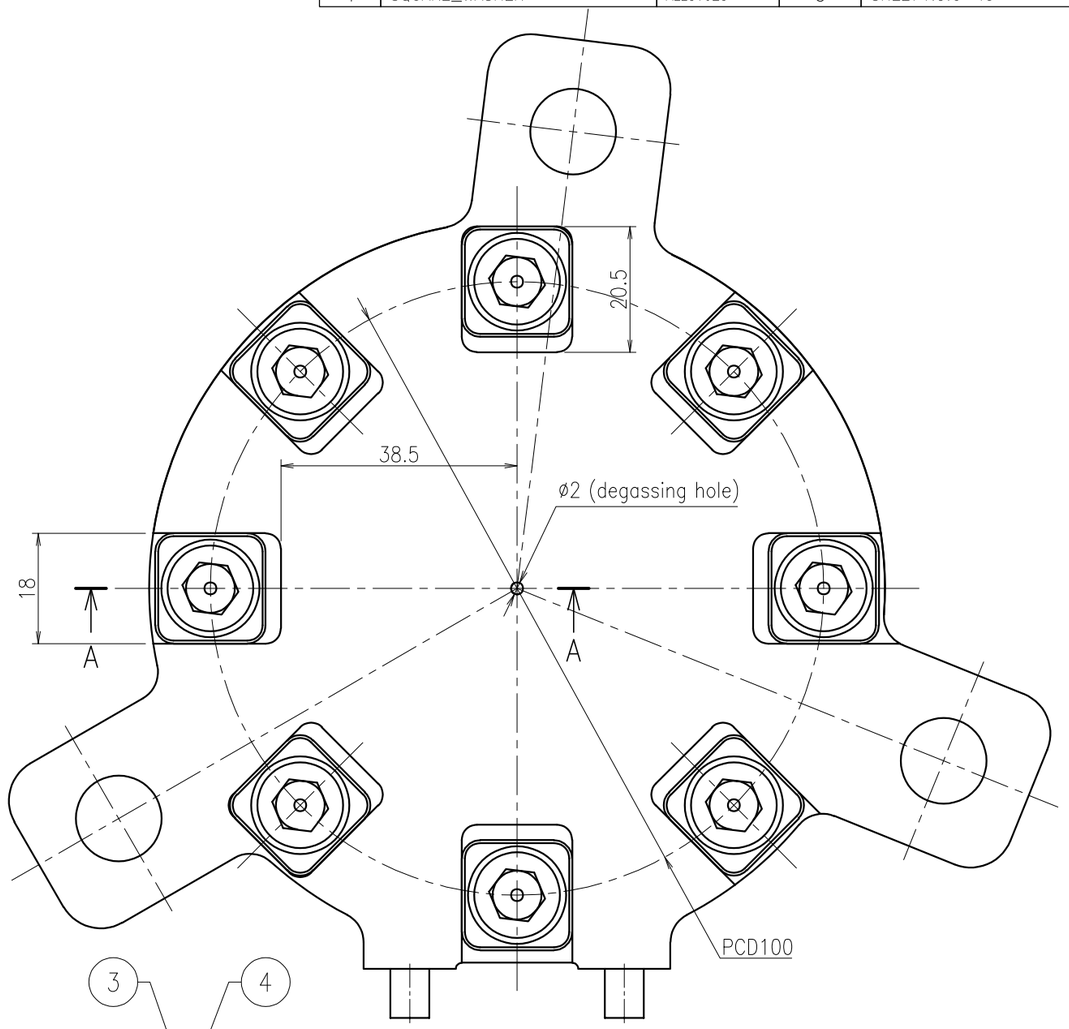

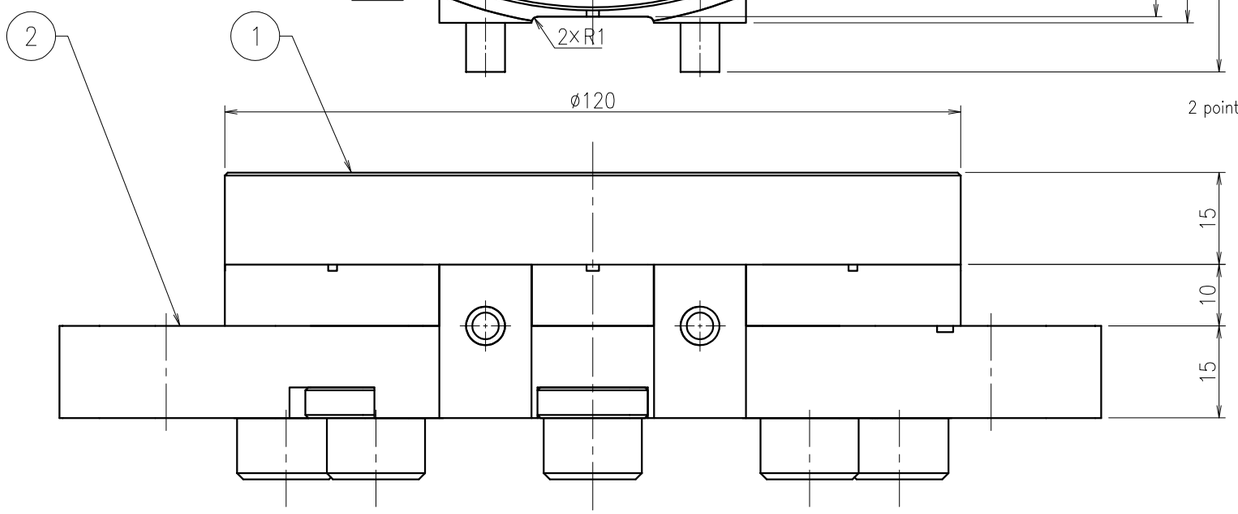

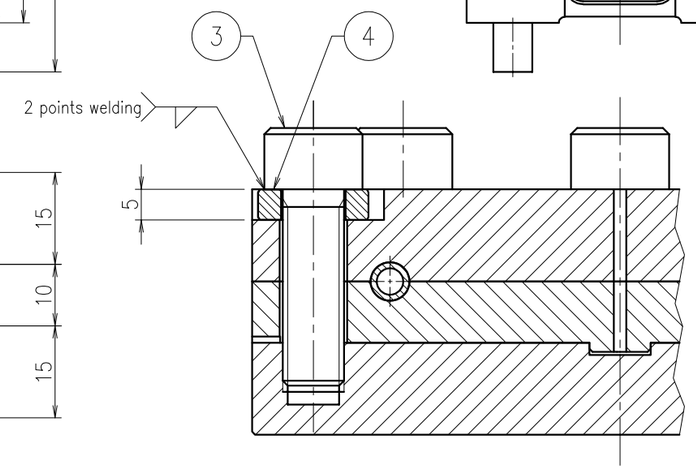

Sectional view A−A

REMARKS		APPROVED	REVIEWED	DRAWN	DATE 2021.11.30	PBS TITLE Diagnostics Poloidal Polarimeter	PROJECTION	SIZE A3
	QST National Institutes for Quantum and Radiological Science and Technology				SCALE 1 : 1	DRAWING TITLE SECOND_MIRROR_ASSEMBLY(M2E6)	DRAWING NO. JADA-55342DW0100	SHEET NO. U-19 / REVISION 0

No.	Name	Material	Quantity	Remarks
1	TUNGSTEN_SECOND_MIRROR	Tungsten	1	SHEET NO.U-22
2	MIRROR_MOUNT (M2E7)	SS316LN-IG, CuCrZr	1set	SHEET NO.U-31
3	HEXAGON_SOCKET_HEAD_SCREW	ALLOY625	8	M10×L32 (with φ2 degassing hole)
4	SQUARE_WASHER	ALLOY625	8	SHEET NO.U-49

NOTE

1. This drawing shows the assembly drawing of the second mirror (M2E7) of the UEMM.

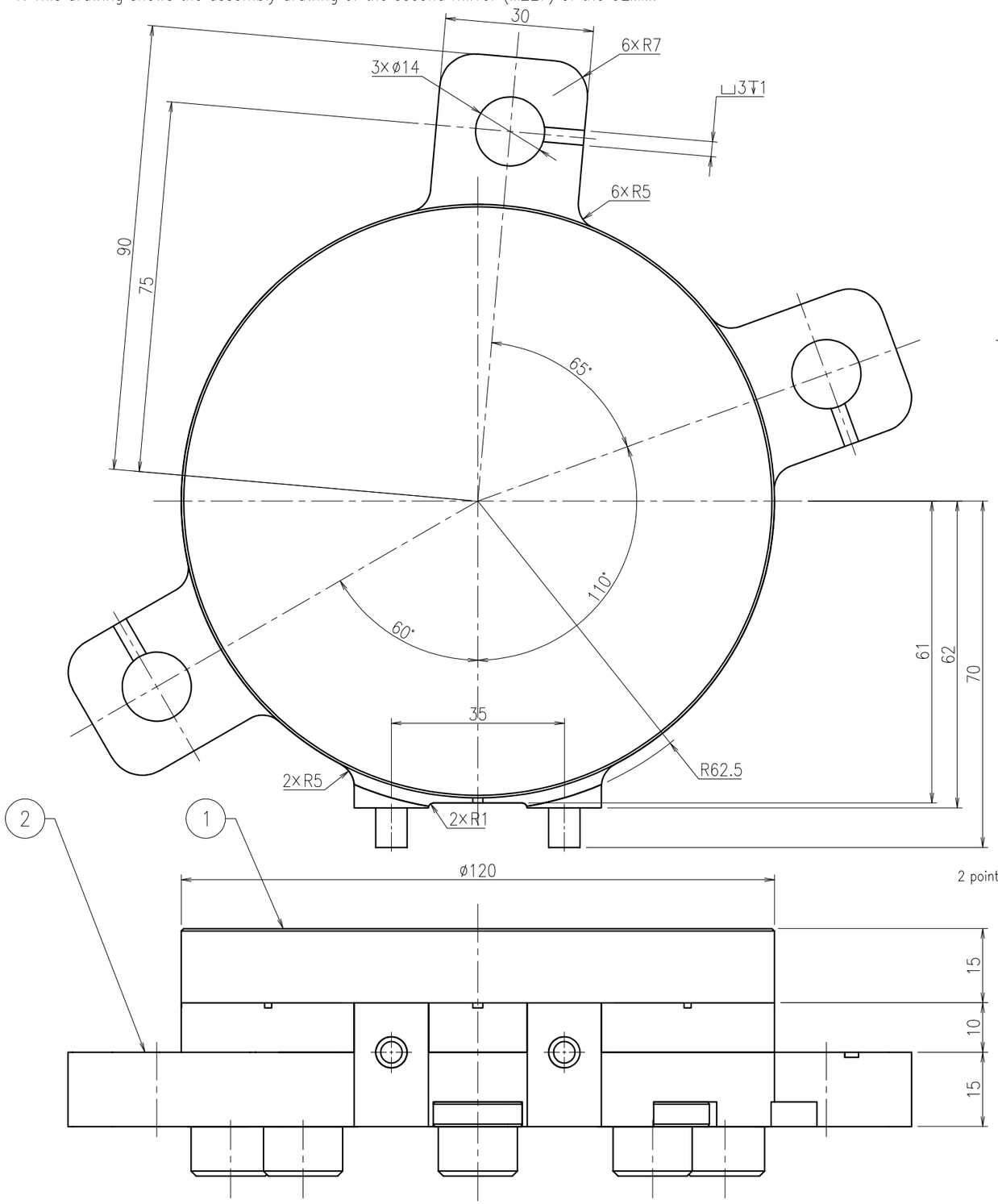

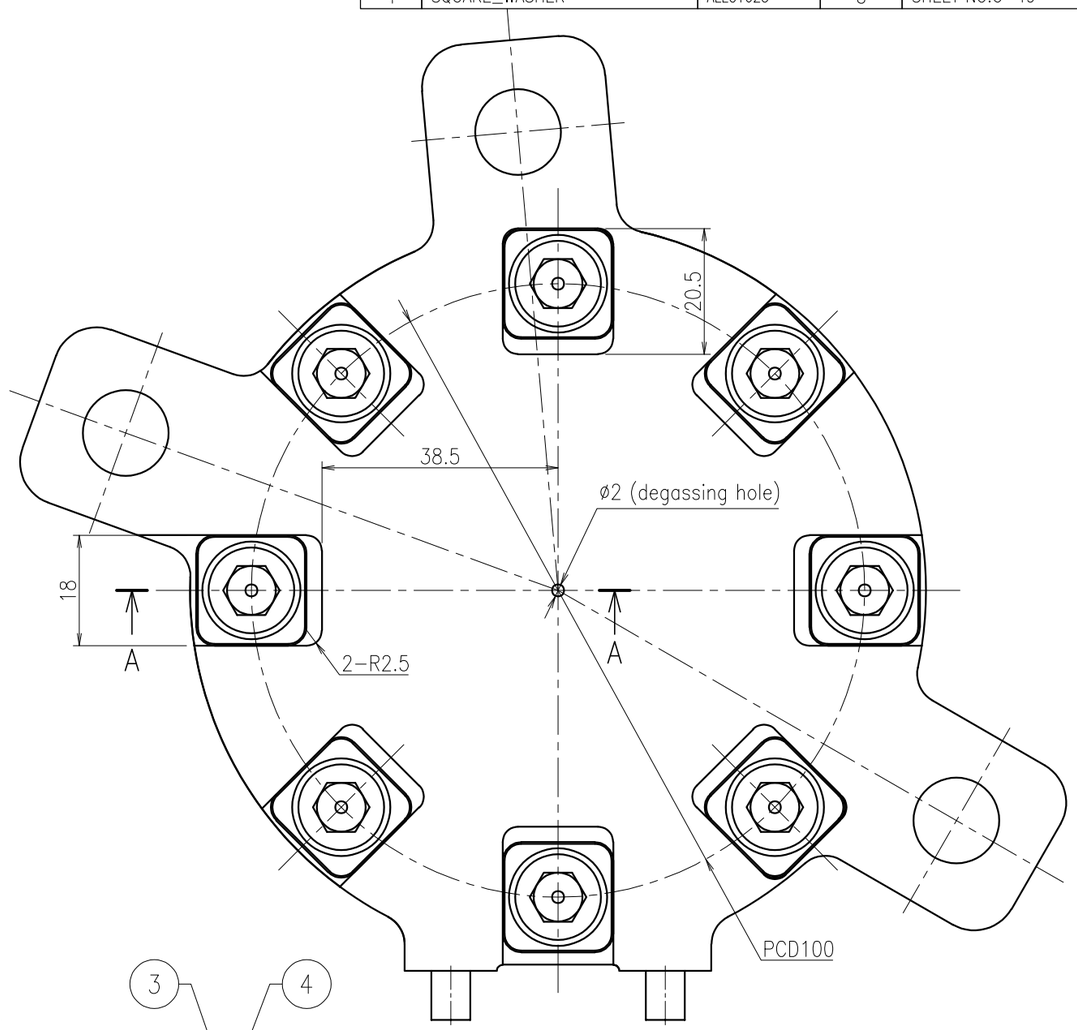

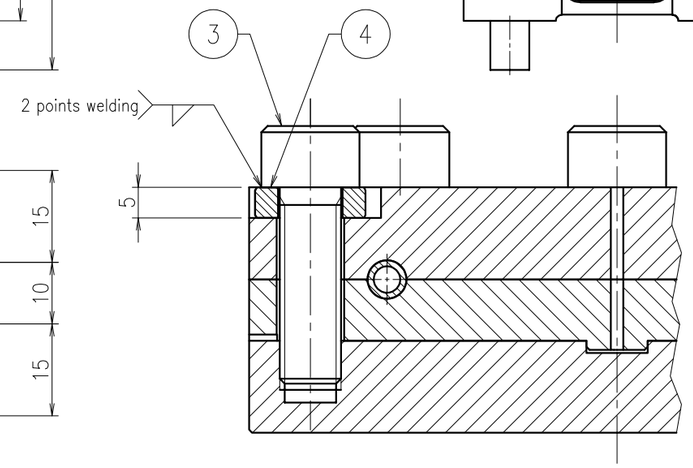

Sectional view A-A

REMARKS		APPROVED	REVIEWED	DRAWN	DATE	PBS TITLE		PROJECTION	SIZE
	QST National Institutes for Quantum and Radiological Science and Technology				2021.11.30	Diagnostics Poloidal Polarimeter			A3
					SCALE 1 : 1	DRAWING TITLE SECOND_MIRROR_ASSEMBLY(M2E7)	DRAWING NO. JADA-55342DW0100	SHEET NO. U-20	REVISION 0

No.	Name	Material	Quantity	Remarks
1	TUNGSTEN_SECOND_MIRROR	Tungsten	1	SHEET NO.U−22
2	MIRROR_MOUNT (M2E8)	SS316LN-IG, CuCrZr	1set	SHEET NO.U−32
3	HEXAGON_SOCKET_HEAD_SCREW	ALLOY625	8	M10×L32 (with ϕ2 degassing hole)
4	SQUARE_WASHER	ALLOY625	8	SHEET NO.U−49

NOTE

1. This drawing shows the assembly drawing of the second mirror (M2E8) of the UEMM.

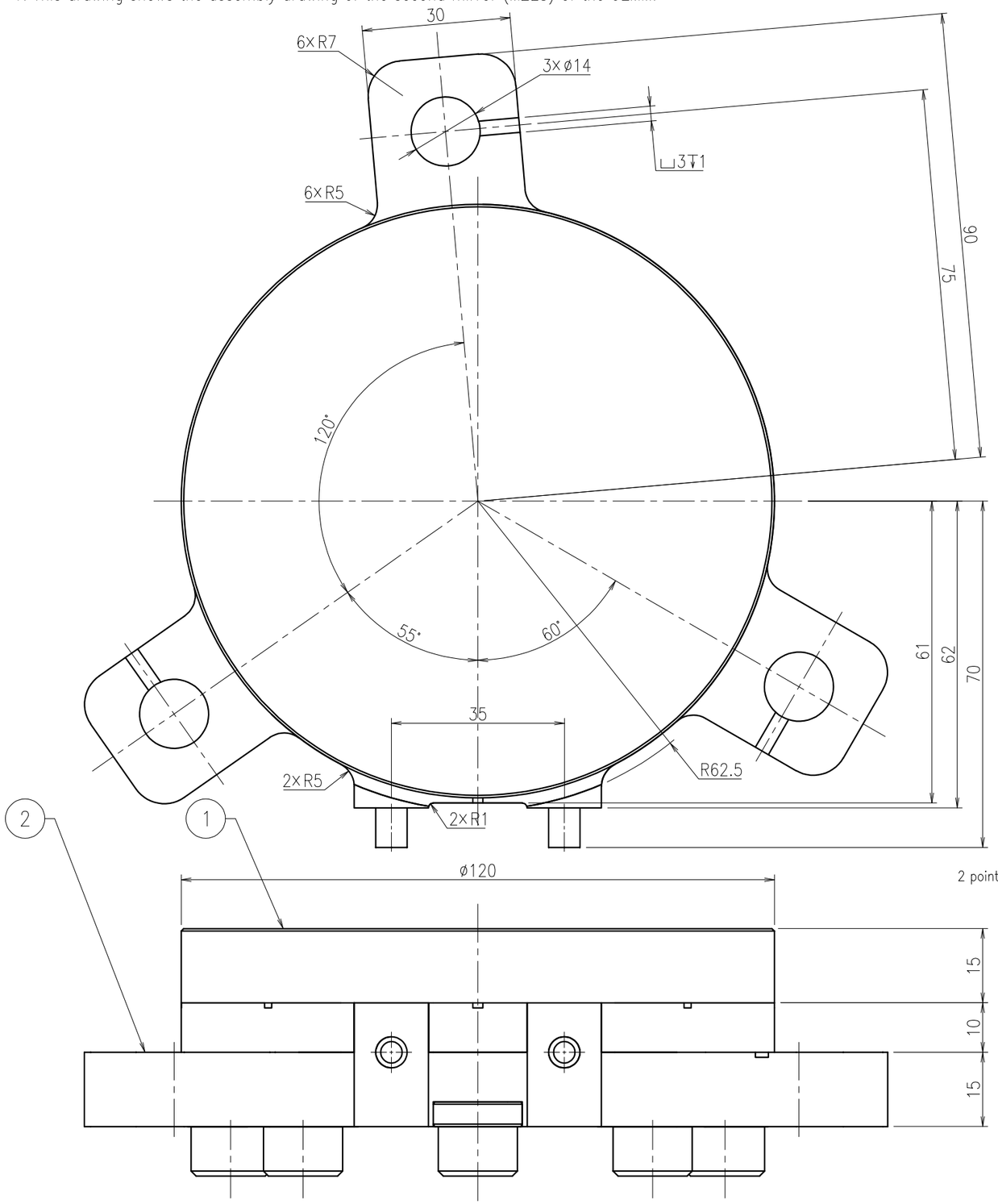

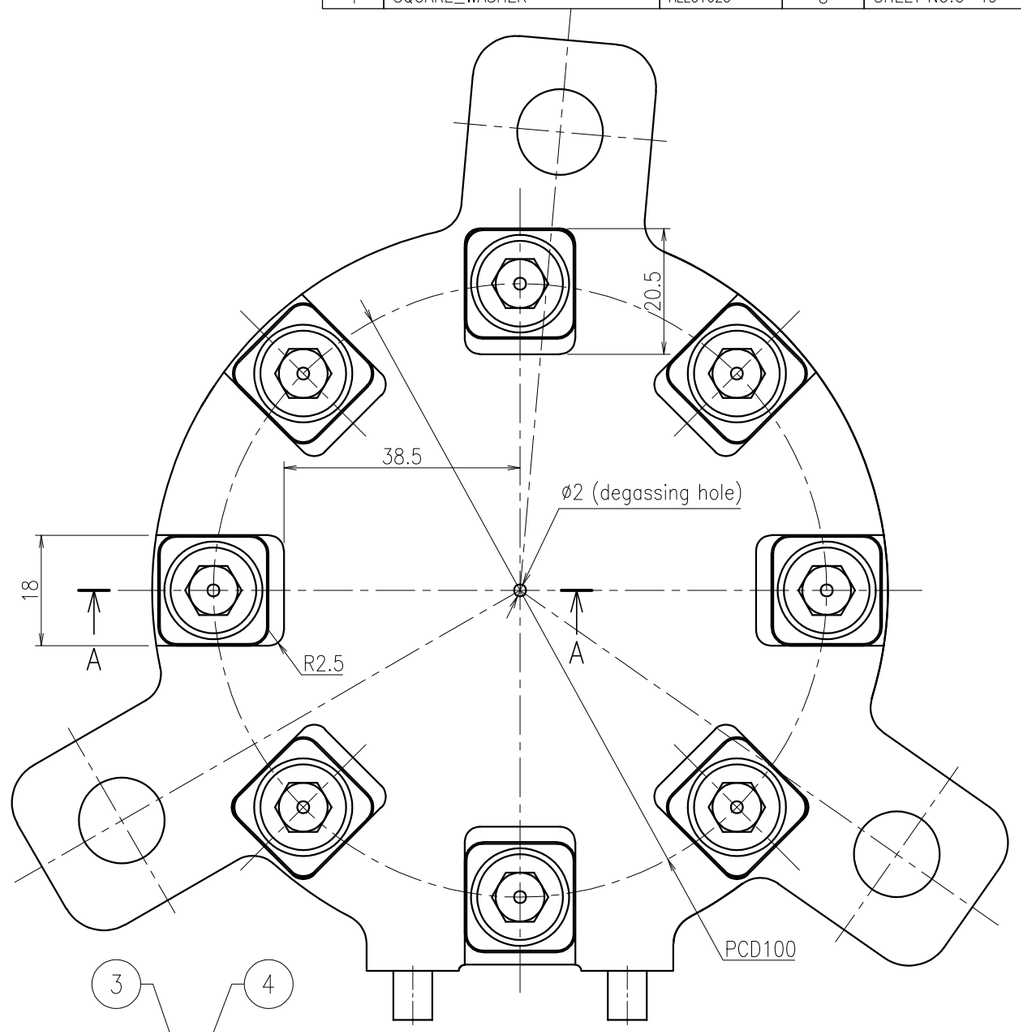

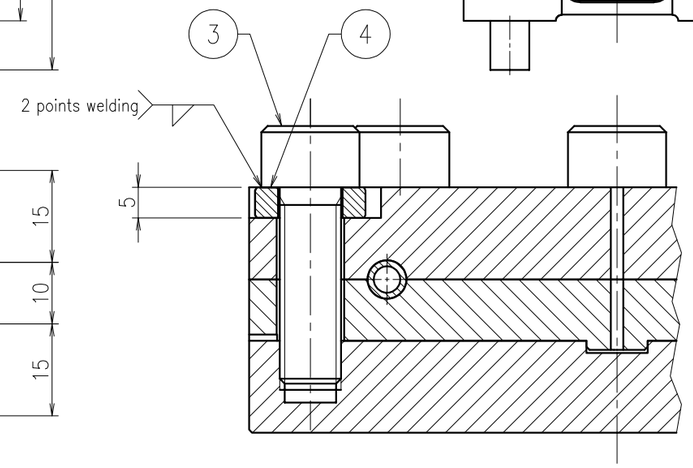

Sectional view A−A

REMARKS		APPROVED	REVIEWED	DRAWN	DATE 2021.11.30	PBS TITLE Diagnostics Poloidal Polarimeter		PROJECTION	SIZE A3
	QST National Institutes for Quantum and Radiological Science and Technology				SCALE 1 : 1	DRAWING TITLE SECOND_MIRROR_ASSEMBLY(M2E8)	DRAWING NO. JADA-55342DW0100	SHEET NO. U-21	REVISION 0

Name	Material	Quantity	Remarks
TUNGSTEN_FIRST_MIRROR	Tungsten	5	
TUNGSTEN_SECOND_MIRROR	Tungsten	5	

General Tolerance : ISO 2768 m-K
Surface roughness not indicated : Ra3.2

NOTE
1. The ridges and corners should be chamfered(about C0.2), and there should be no burrs.
2. Minimize the chamfer dimensions of the screw hole edges.
3. After processing, perform degreasing cleaning.
4. The mirror surface is finished by polishing.
5. The mirror surface after polishing is protected by a special sheet.

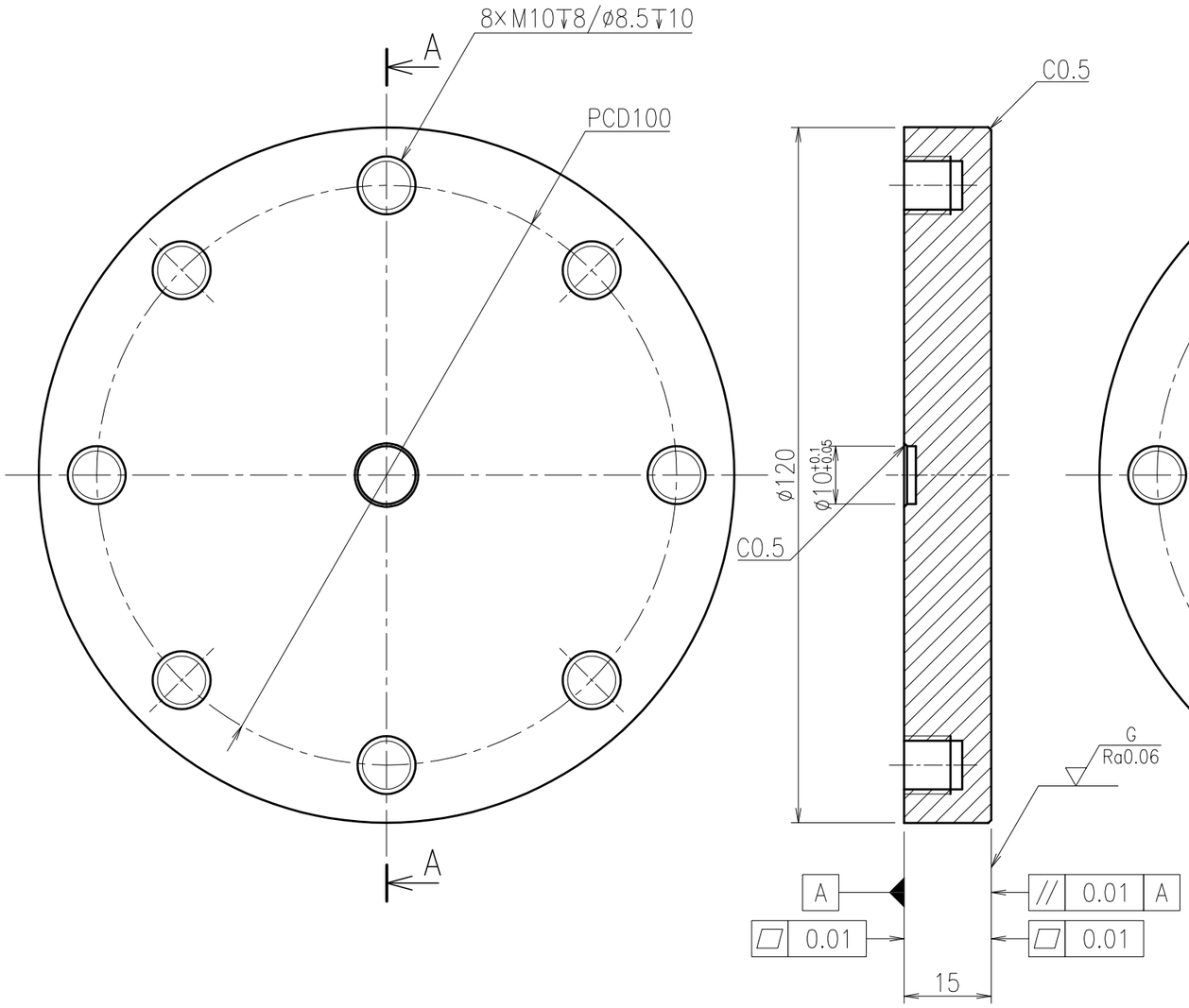

Sectional view A–A

TUNGSTEN_FIRST_MIRROR

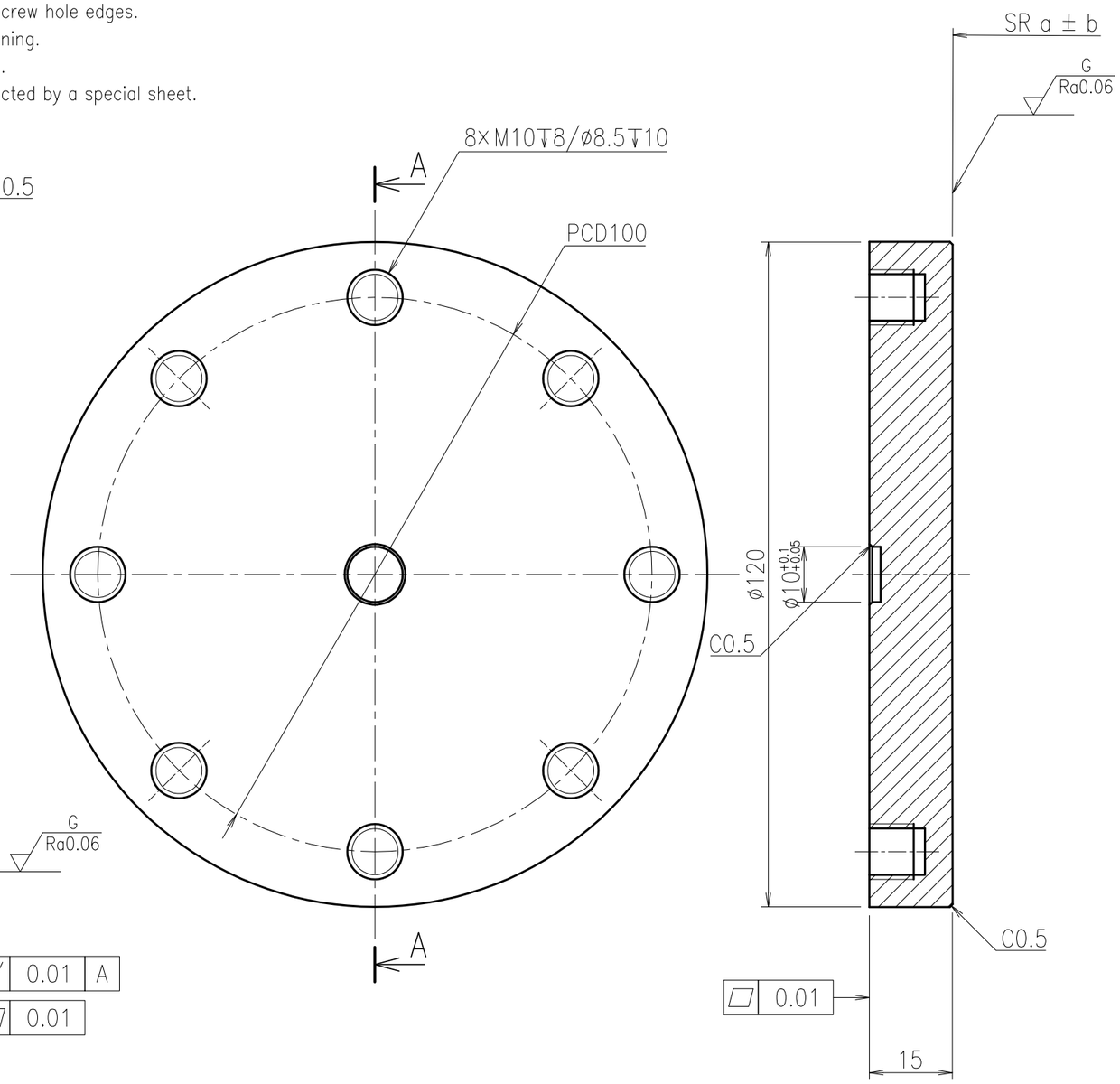

Sectional view A–A

TUNGSTEN_SECOND_MIRROR

Mirror_number	a	b
M2E1	25000	1250
M2E5	21000	1050
M2E6	21000	1050
M2E7	21000	1050
M2E8	21000	1050

REMARKS		APPROVED	REVIEWED	DRAWN	DATE 2021.11.30	PBS TITLE Diagnostics Poloidal Polarimeter	PROJECTION	SIZE A3
	QST National Institutes for Quantum and Radiological Science and Technology				SCALE 1 : 1	DRAWING TITLE TUNGSTEN_MIRROR	DRAWING NO. JADA-55342DW0100	SHEET NO. U-22 / REVISION 0

General Tolerance : ISO 2768 m-K
Surface roughness not indicated : Ra6.3

NOTE
1. This drawing shows a machining drawing of a member molded by the hot isostatic pressing method.
2. The ridges and corners should be chamfered(about C0.2), and there should be no burrs.
3. After processing, perform degreasing cleaning.
4. SHEET NO.U-51 shows the assembly of parts before processing by the hot isostatic pressing method.

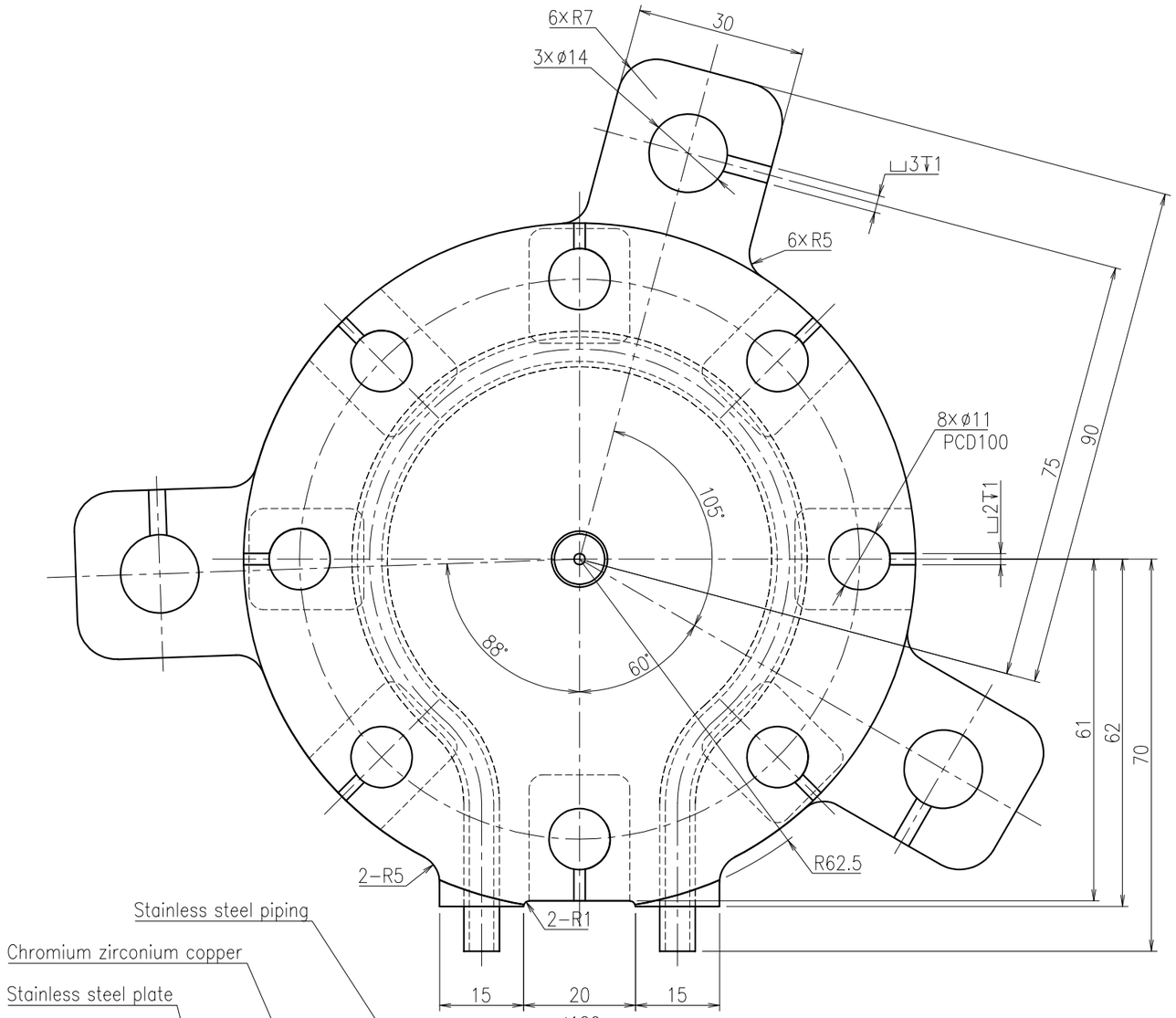

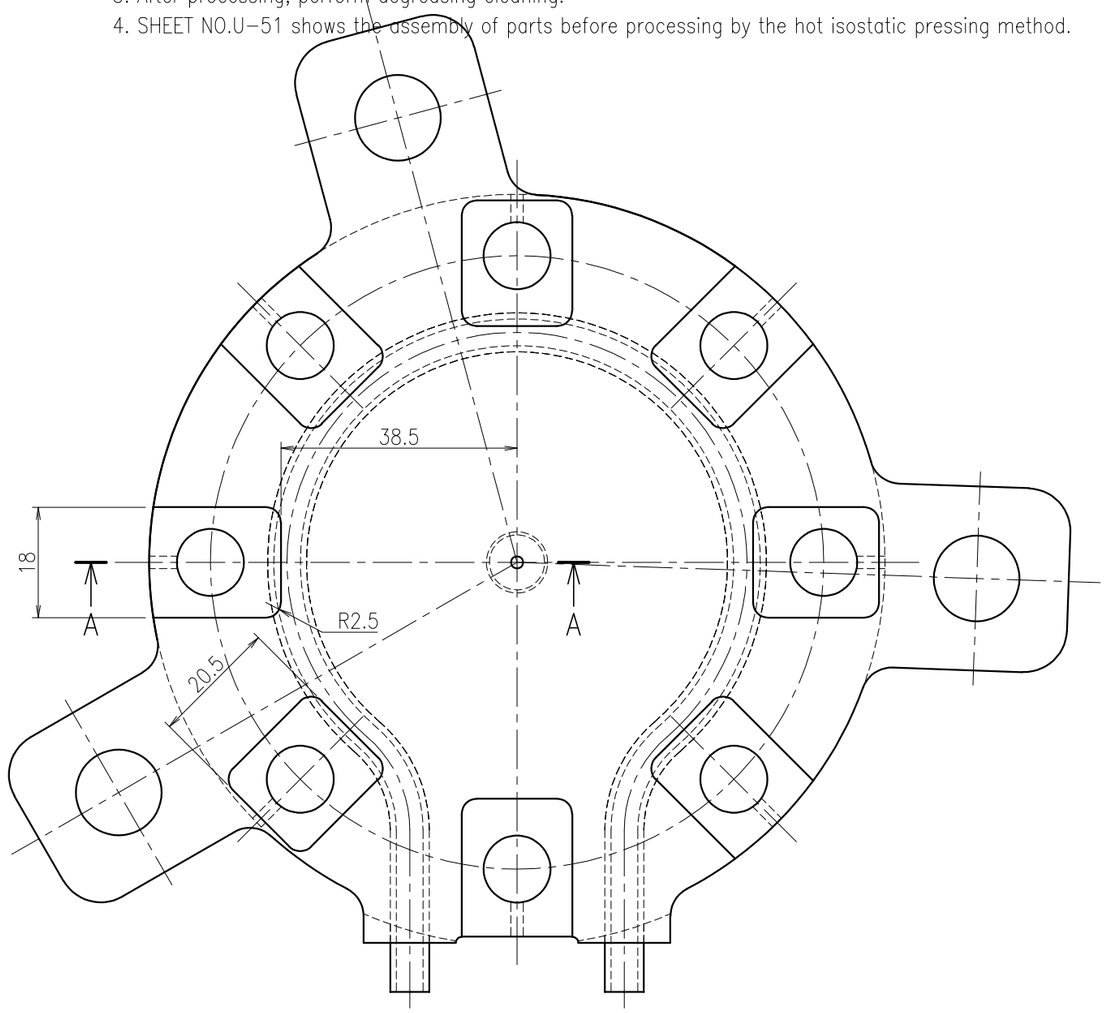

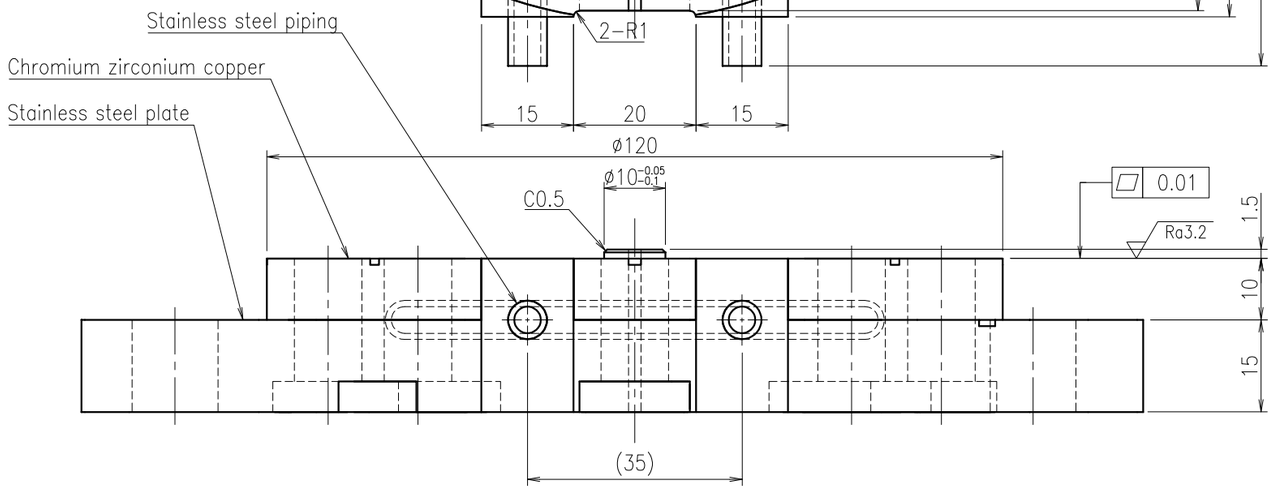

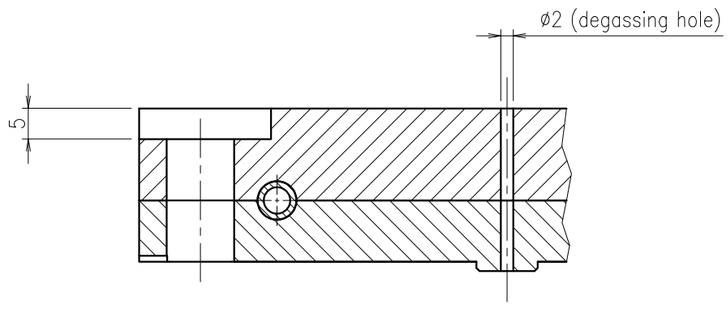

Sectional view A-A

REMARKS		APPROVED	REVIEWED	DRAWN	DATE 2021.11.30	PBS TITLE Diagnostics Poloidal Polarimeter	PROJECTION	SIZE A3
	QST National Institutes for Quantum and Radiological Science and Technology				SCALE 1 : 1	DRAWING TITLE MIRROR_MOUNT (M1E1)	DRAWING NO. JADA-55342DW0100	SHEET NO. U-23 / REVISION 0

General Tolerance : ISO 2768 m-K
Surface roughness not indicated : Ra6.3

NOTE
1. This drawing shows a machining drawing of a member molded by the hot isostatic pressing method.
2. The ridges and corners should be chamfered(about C0.2), and there should be no burrs.
3. After processing, perform degreasing cleaning.
4. SHEET NO.U-51 shows the assembly of parts before processing by the hot isostatic pressing method.

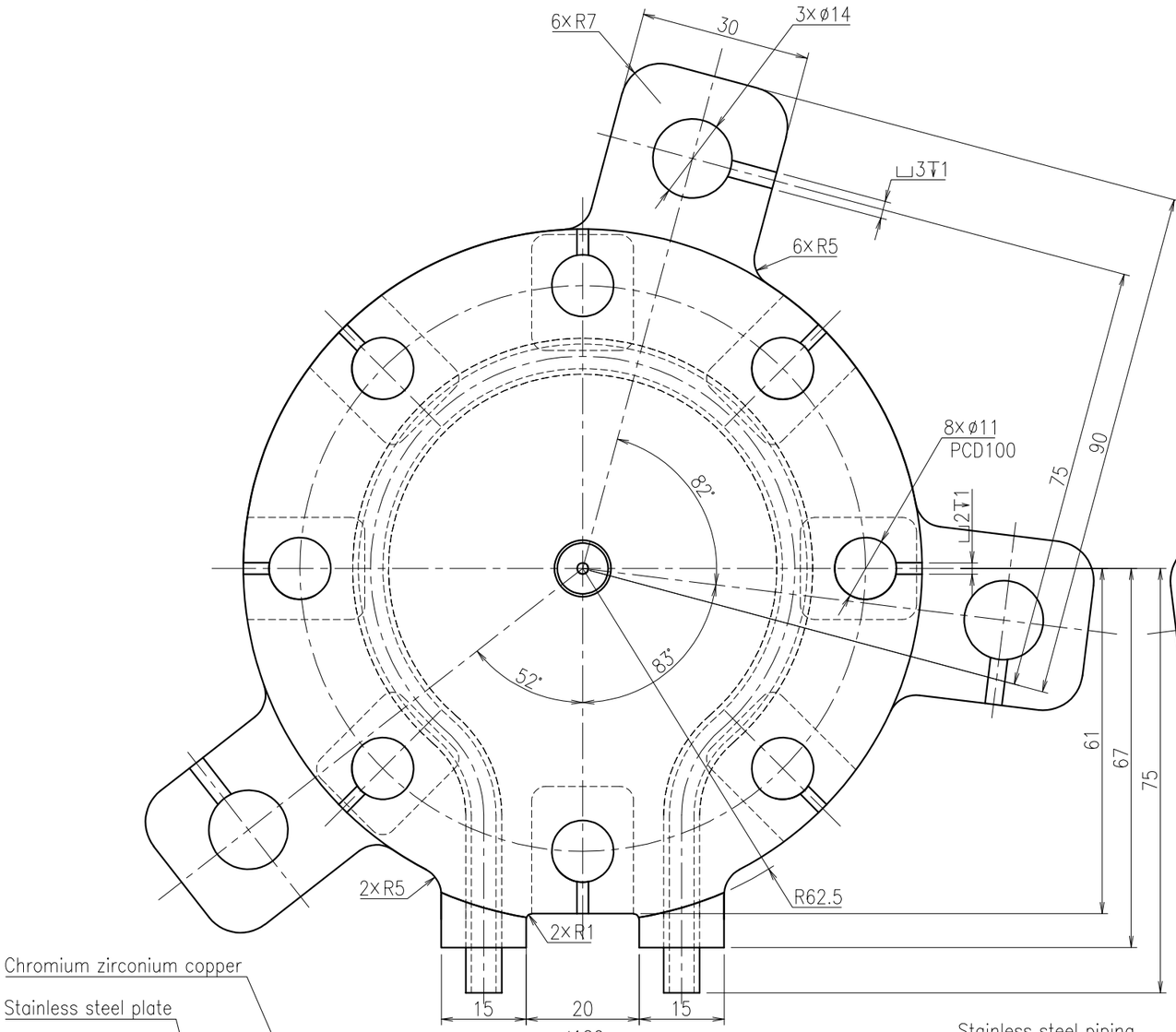

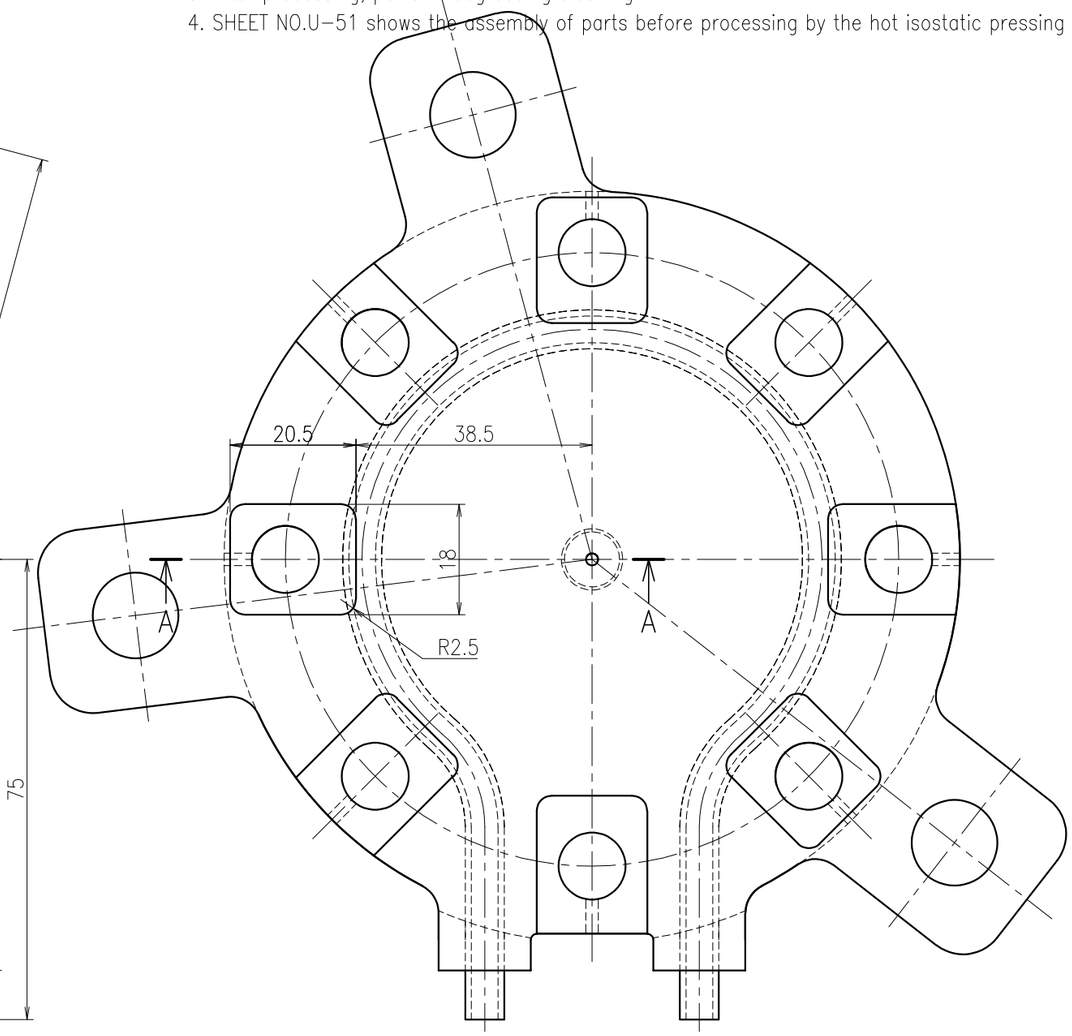

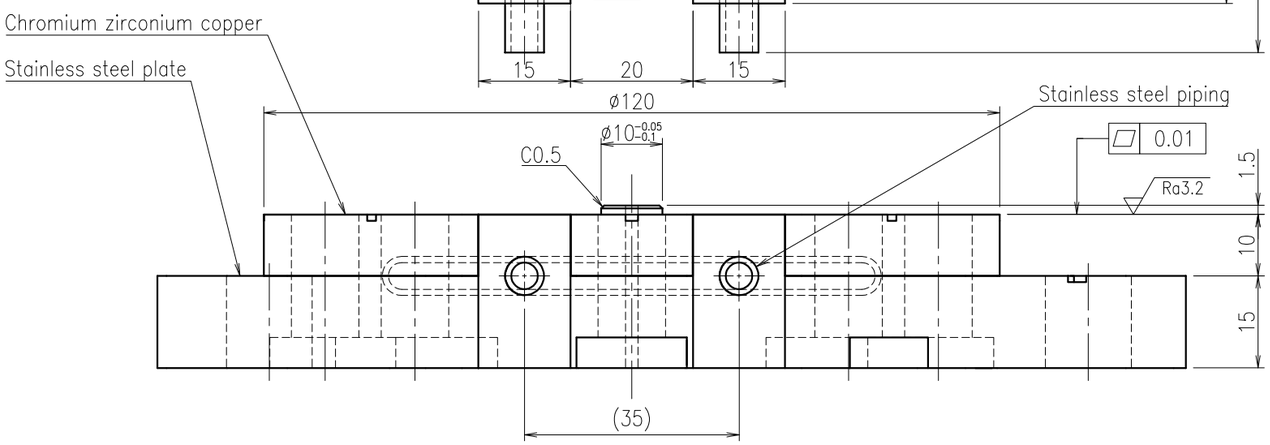

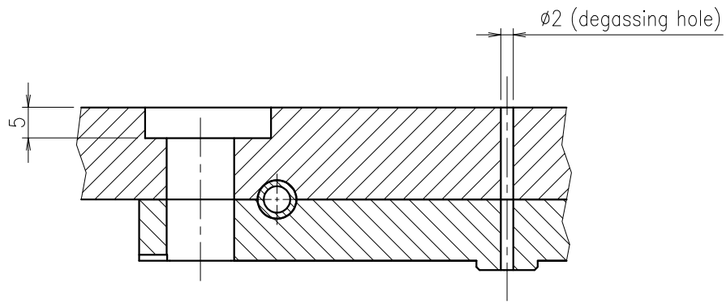

Sectional view A-A

REMARKS		APPROVED	REVIEWED	DRAWN	DATE 2021.11.30	PBS TITLE Diagnostics Poloidal Polarimeter	PROJECTION	SIZE A3
	QST National Institutes for Quantum and Radiological Science and Technology				SCALE 1 : 1	DRAWING TITLE MIRROR_MOUNT (M1E5)	DRAWING NO. JADA-55342DW0100	SHEET NO. U-24 / REVISION 0

General Tolerance : ISO 2768 m-K
Surface roughness not indicated : Ra6.3

NOTE
1. This drawing shows a machining drawing of a member molded by the hot isostatic pressing method.
2. The ridges and corners should be chamfered(about C0.2), and there should be no burrs.
3. After processing, perform degreasing cleaning.
4. SHEET NO.U-51 shows the assembly of parts before processing by the hot isostatic pressing method.

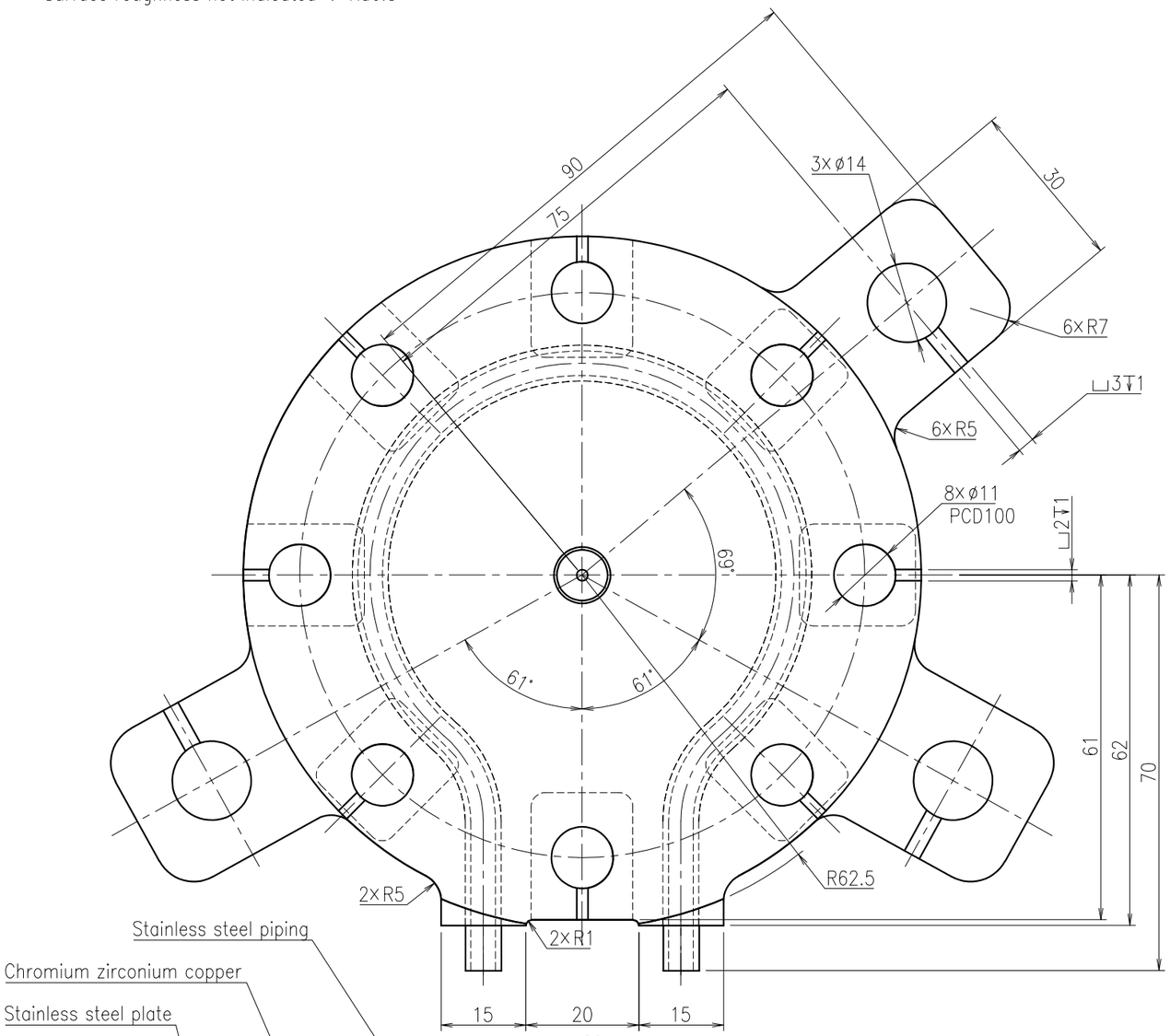

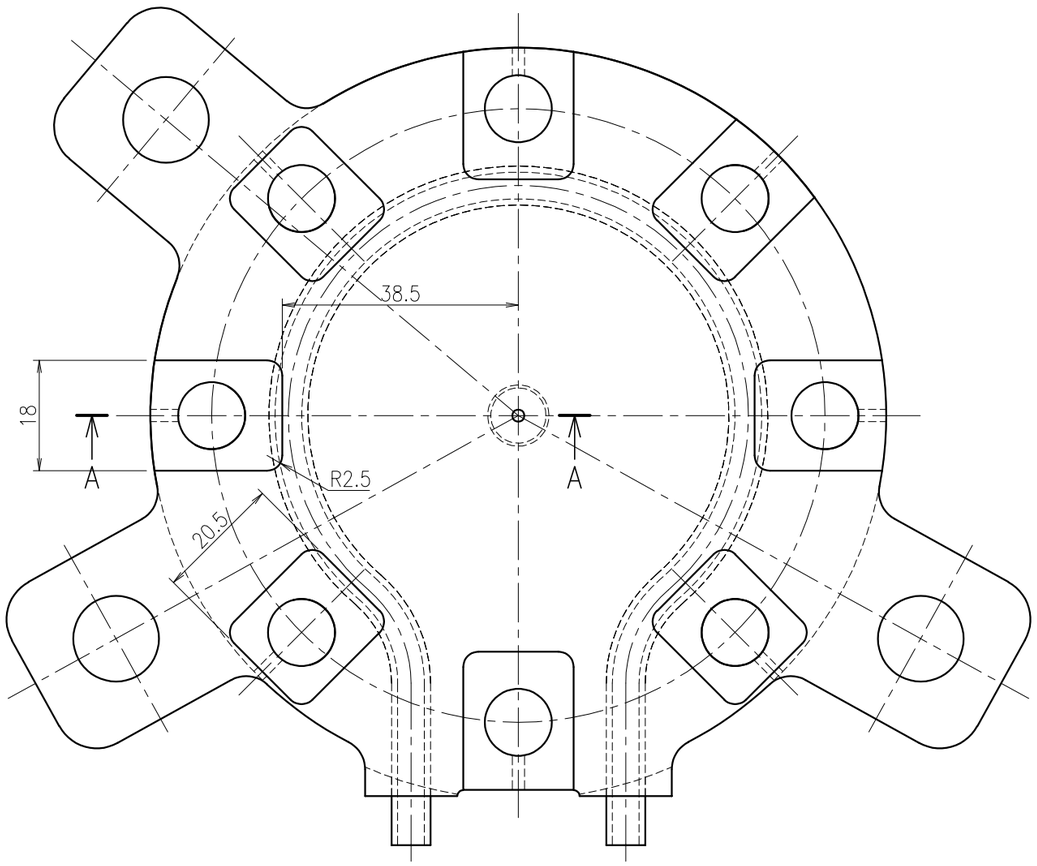

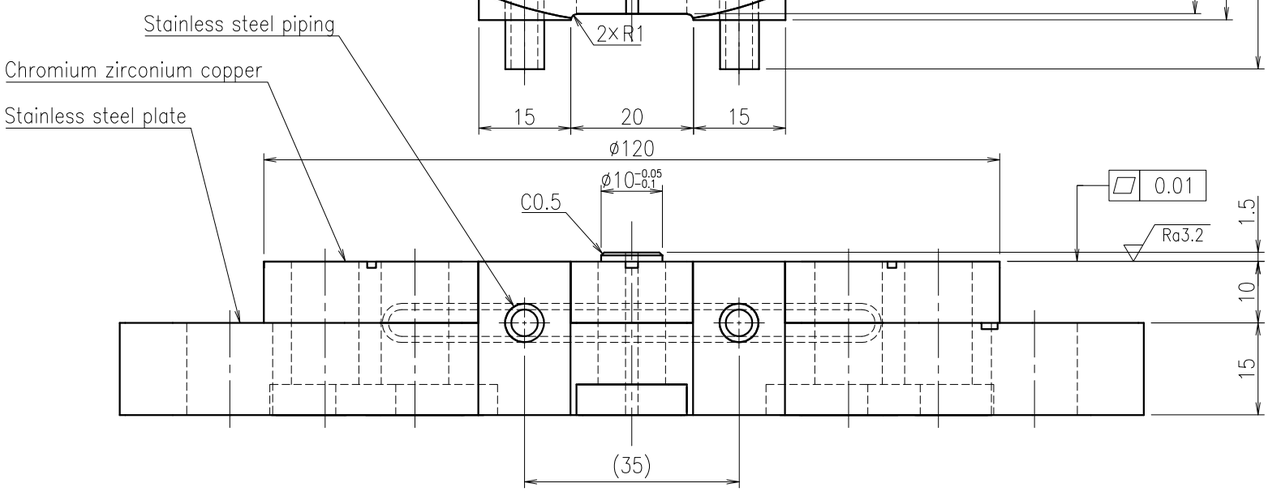

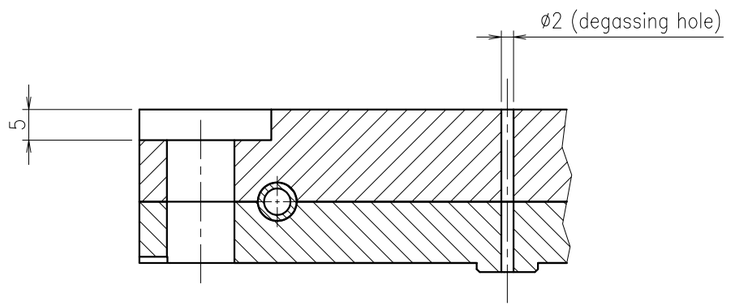

Sectional view A-A

REMARKS		APPROVED	REVIEWED	DRAWN	DATE	PBS TITLE	PROJECTION	SIZE
	QST National Institutes for Quantum and Radiological Science and Technology				2021.11.30	Diagnostics Poloidal Polarimeter		A3
					SCALE 1 : 1	DRAWING TITLE MIRROR_MOUNT (M1E6)	DRAWING NO. JADA-55342DW0100	SHEET NO. U-25 / REVISION 0

General Tolerance : ISO 2768 m-K
Surface roughness not indicated : Ra6.3

NOTE
1. This drawing shows a machining drawing of a member molded by the hot isostatic pressing method.
2. The ridges and corners should be chamfered(about C0.2), and there should be no burrs.
3. After processing, perform degreasing cleaning.
4. SHEET NO.U-51 shows the assembly of parts before processing by the hot isostatic pressing method.

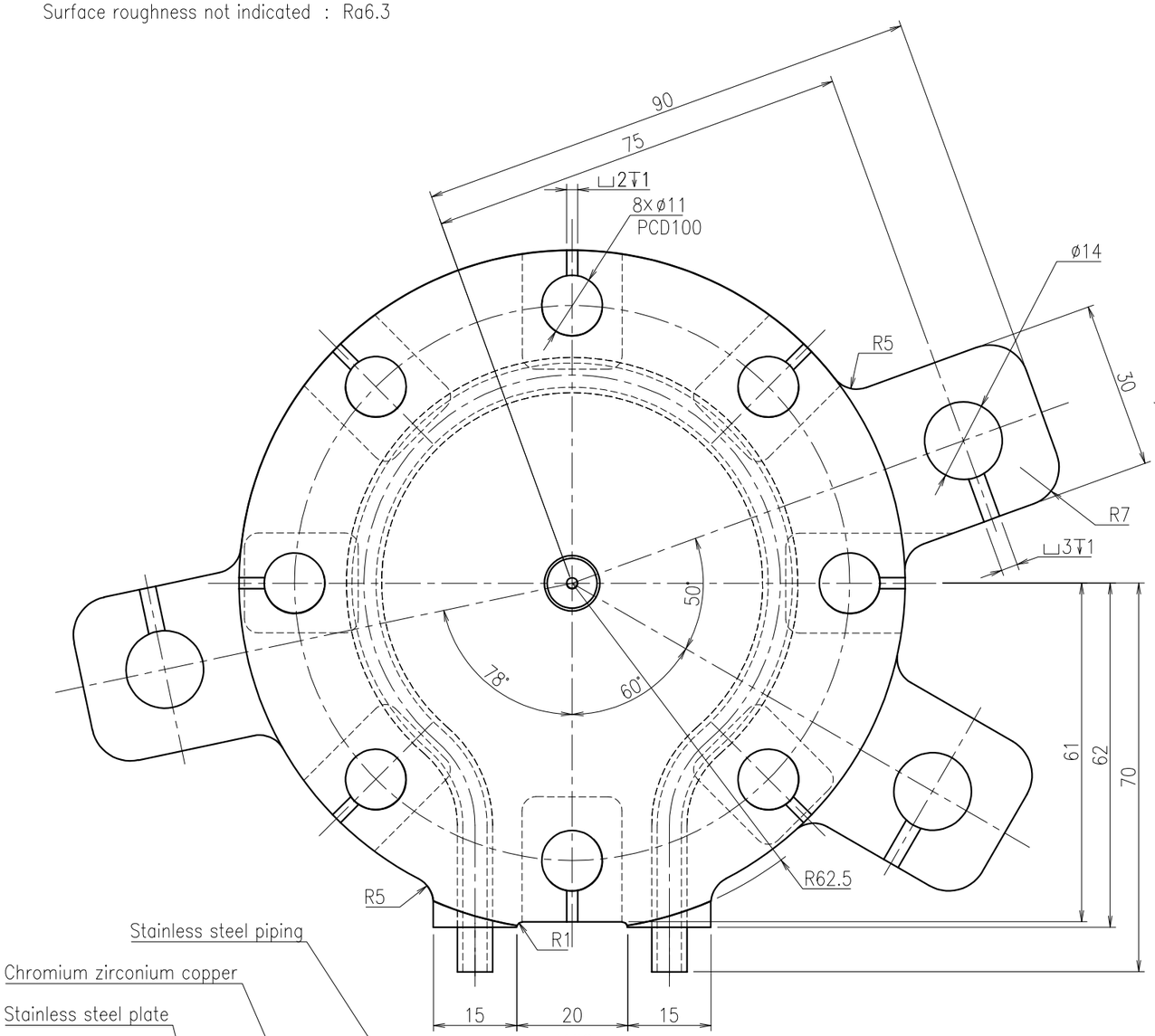

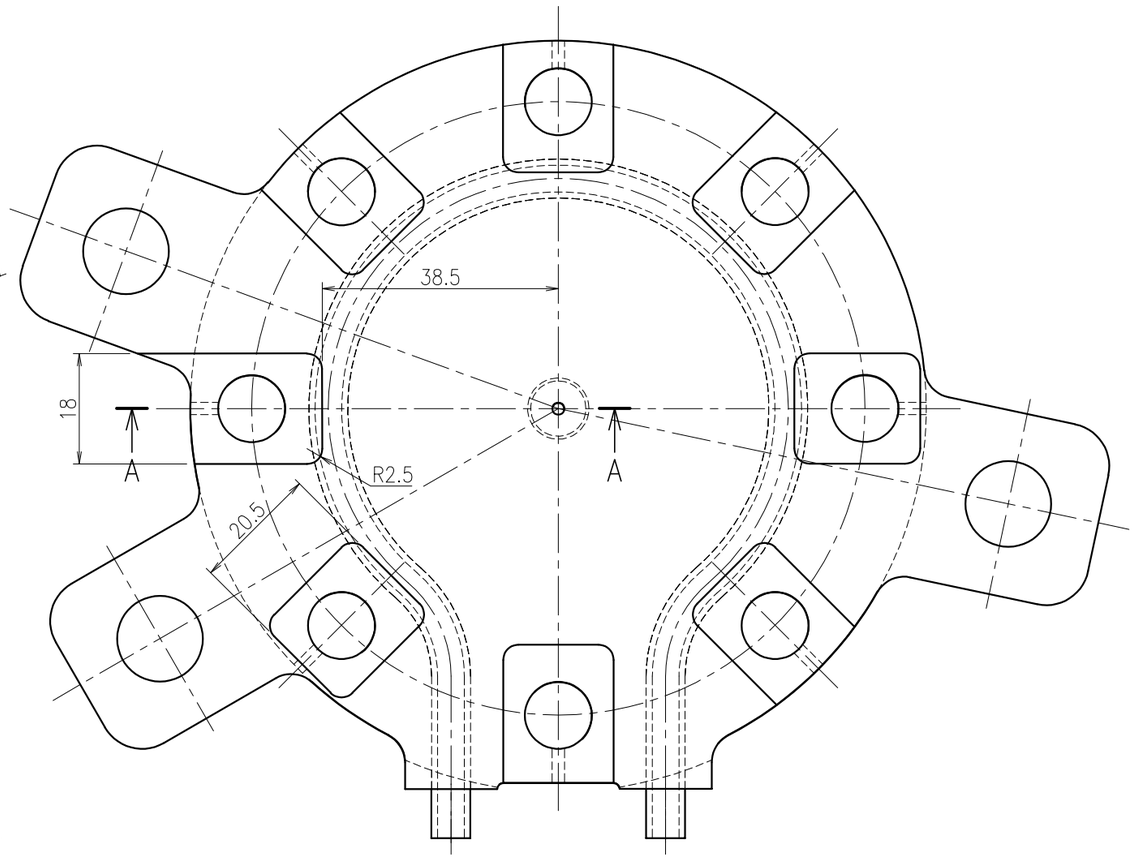

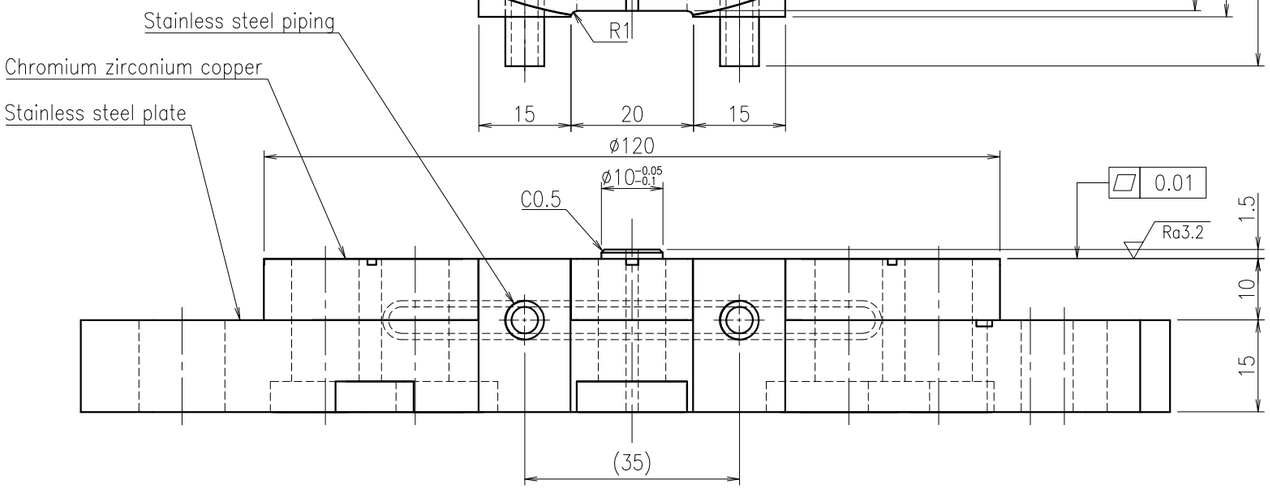

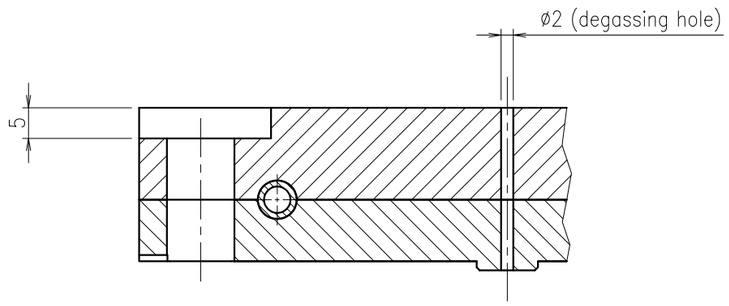

Sectional view A-A

REMARKS		APPROVED	REVIEWED	DRAWN	DATE	PBS TITLE	PROJECTION	SIZE
	QST National Institutes for Quantum and Radiological Science and Technology				2021.11.30	Diagnostics Poloidal Polarimeter		A3
					SCALE 1 : 1	DRAWING TITLE MIRROR_MOUNT (M1E7)	DRAWING NO. JADA-55342DW0100	SHEET NO. U-26 / REVISION 0

IO APPROVED BY : VAYAKIS G. DATE : 18 MAR 2022 INTENDED USAGE : FOR TENDER

General Tolerance : ISO 2768 m-K
Surface roughness not indicated : Ra6.3

NOTE
1. This drawing shows a machining drawing of a member molded by the hot isostatic pressing method.
2. The ridges and corners should be chamfered(about C0.2), and there should be no burrs.
3. After processing, perform degreasing cleaning.
4. SHEET NO.U-51 shows the assembly of parts before processing by the hot isostatic pressing method.

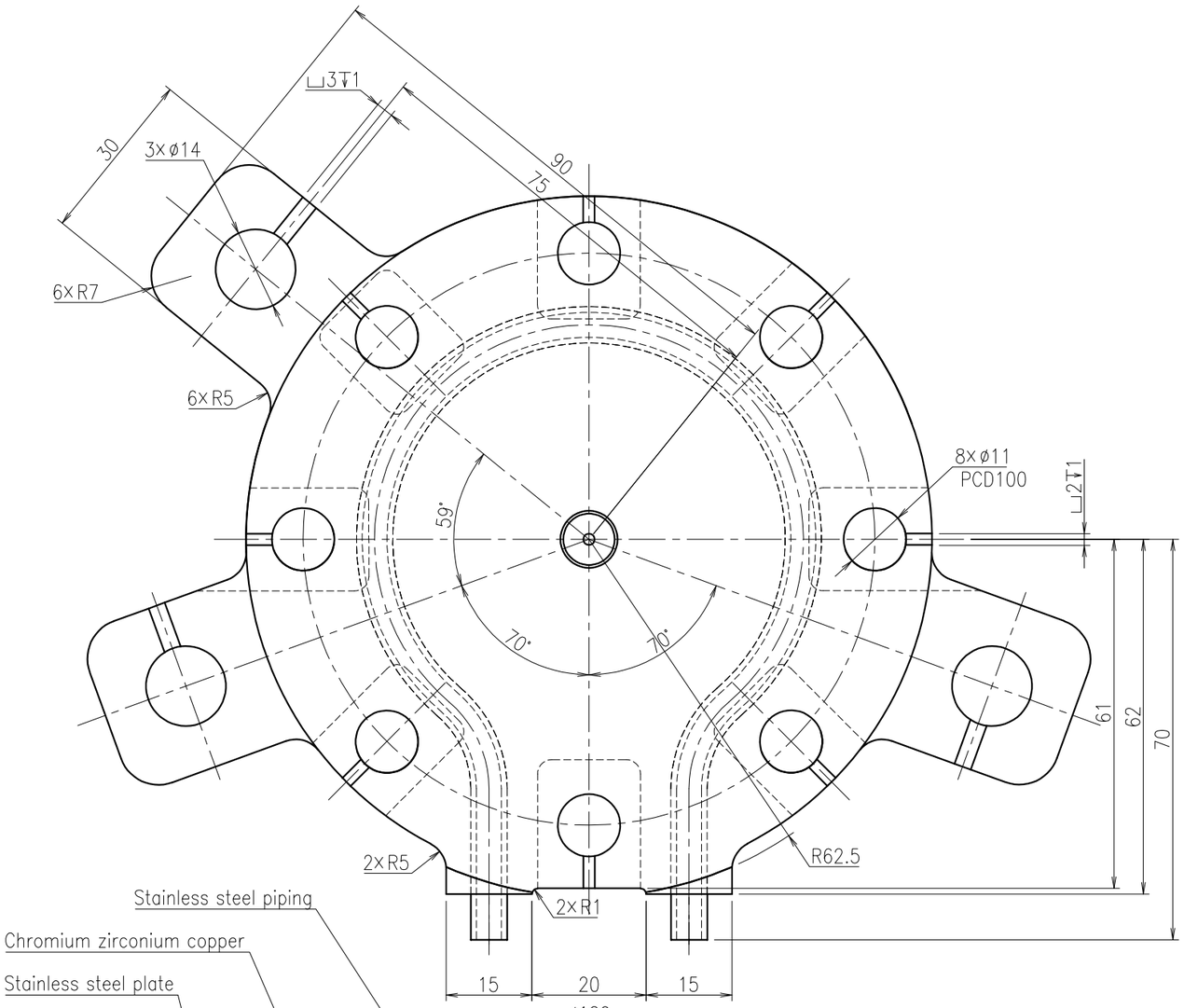

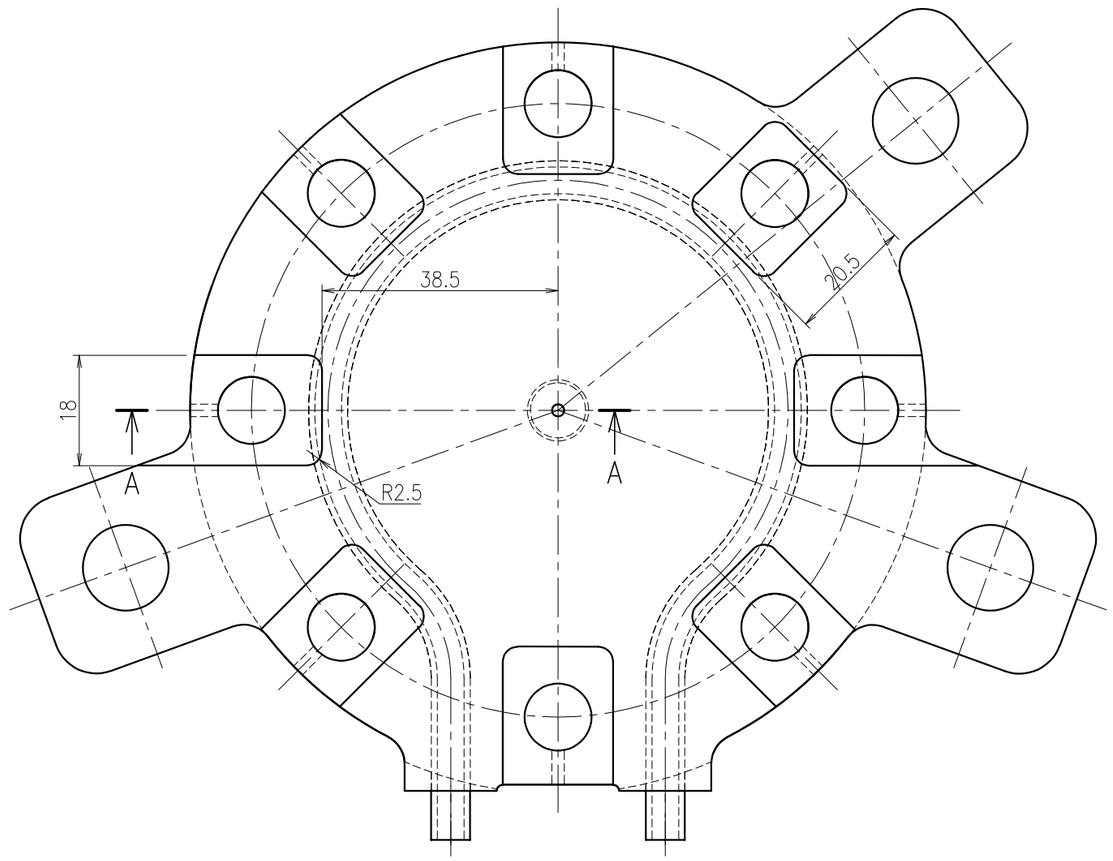

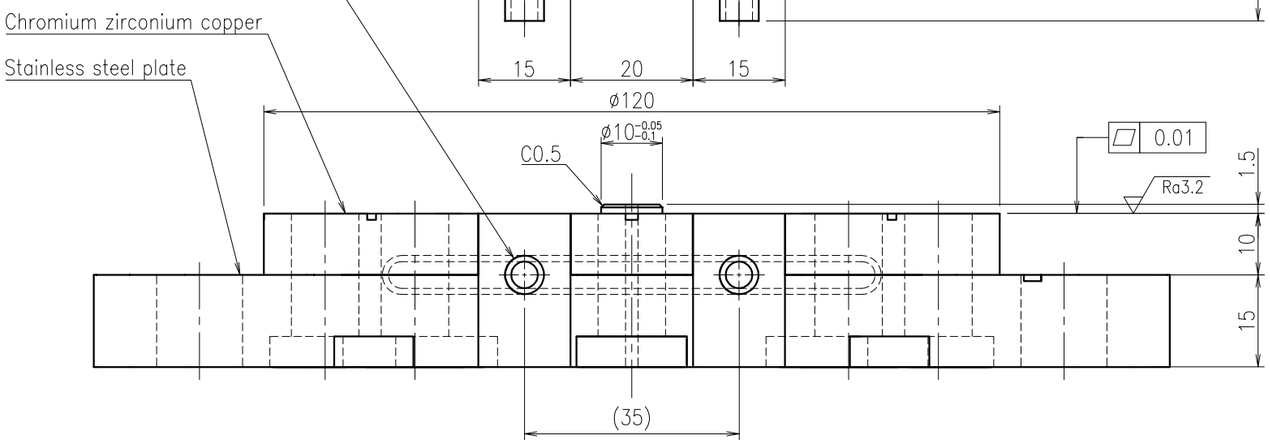

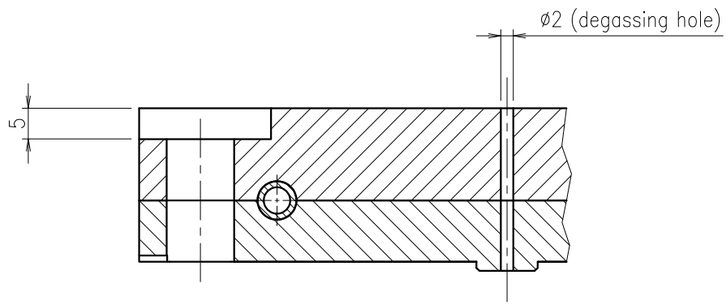

Sectional view A-A

REMARKS		APPROVED	REVIEWED	DRAWN	DATE	PBS TITLE	PROJECTION	SIZE
	QST National Institutes for Quantum and Radiological Science and Technology				2021.11.30	Diagnostics Poloidal Polarimeter		A3
					SCALE 1 : 1	DRAWING TITLE MIRROR_MOUNT (M1E8)	DRAWING NO. JADA-55342DW0100	SHEET NO. U-27 / REVISION 0

IO APPROVED BY : VAYAKIS G. DATE : 18 MAR 2022 INTENDED USAGE : FOR TENDER

General Tolerance : ISO 2768 m-K
Surface roughness not indicated : Ra6.3

NOTE
1. This drawing shows a machining drawing of a member molded by the hot isostatic pressing method.
2. The ridges and corners should be chamfered(about C0.2), and there should be no burrs.
3. After processing, perform degreasing cleaning.
4. SHEET NO.U-51 shows the assembly of parts before processing by the hot isostatic pressing method.

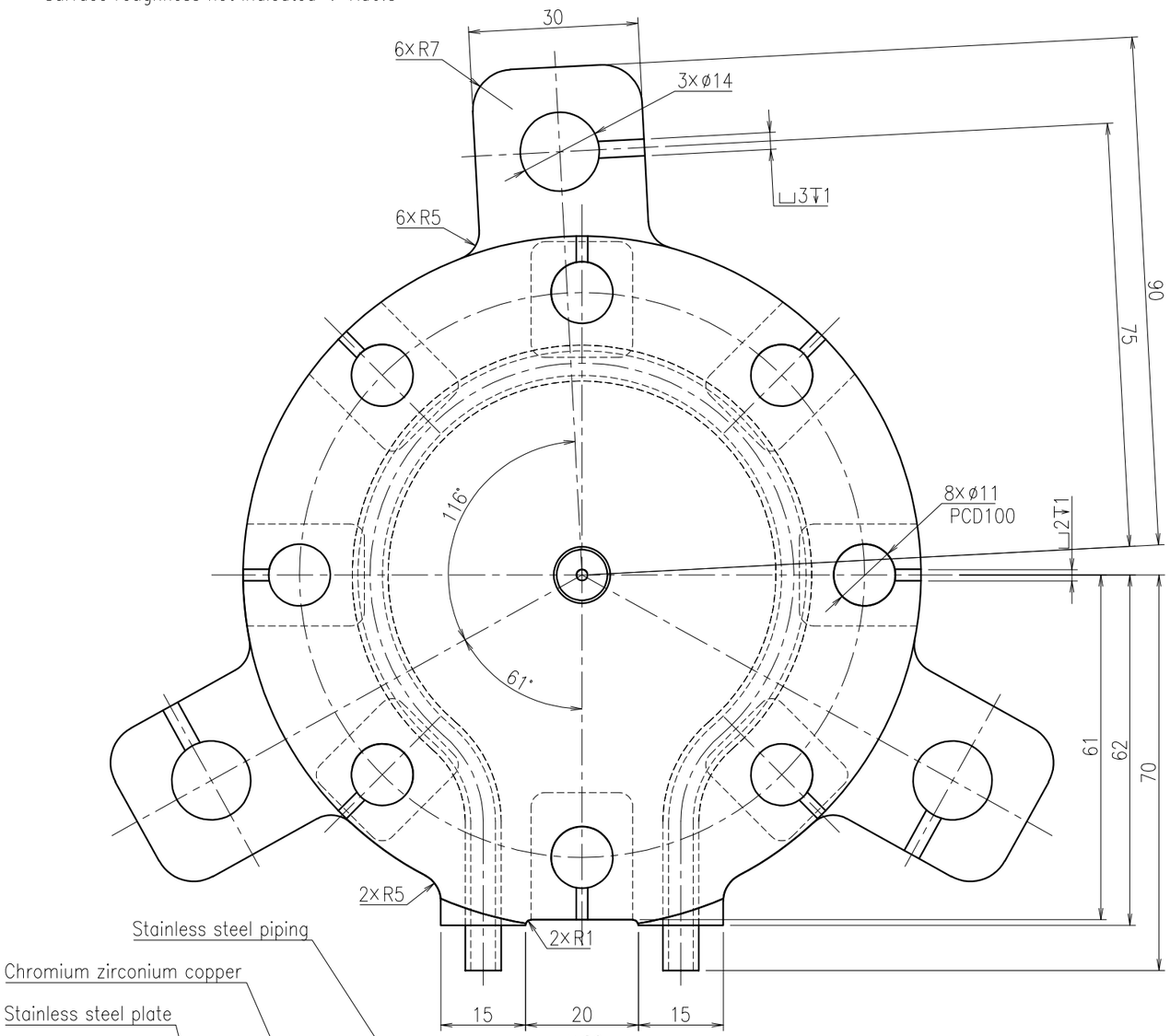

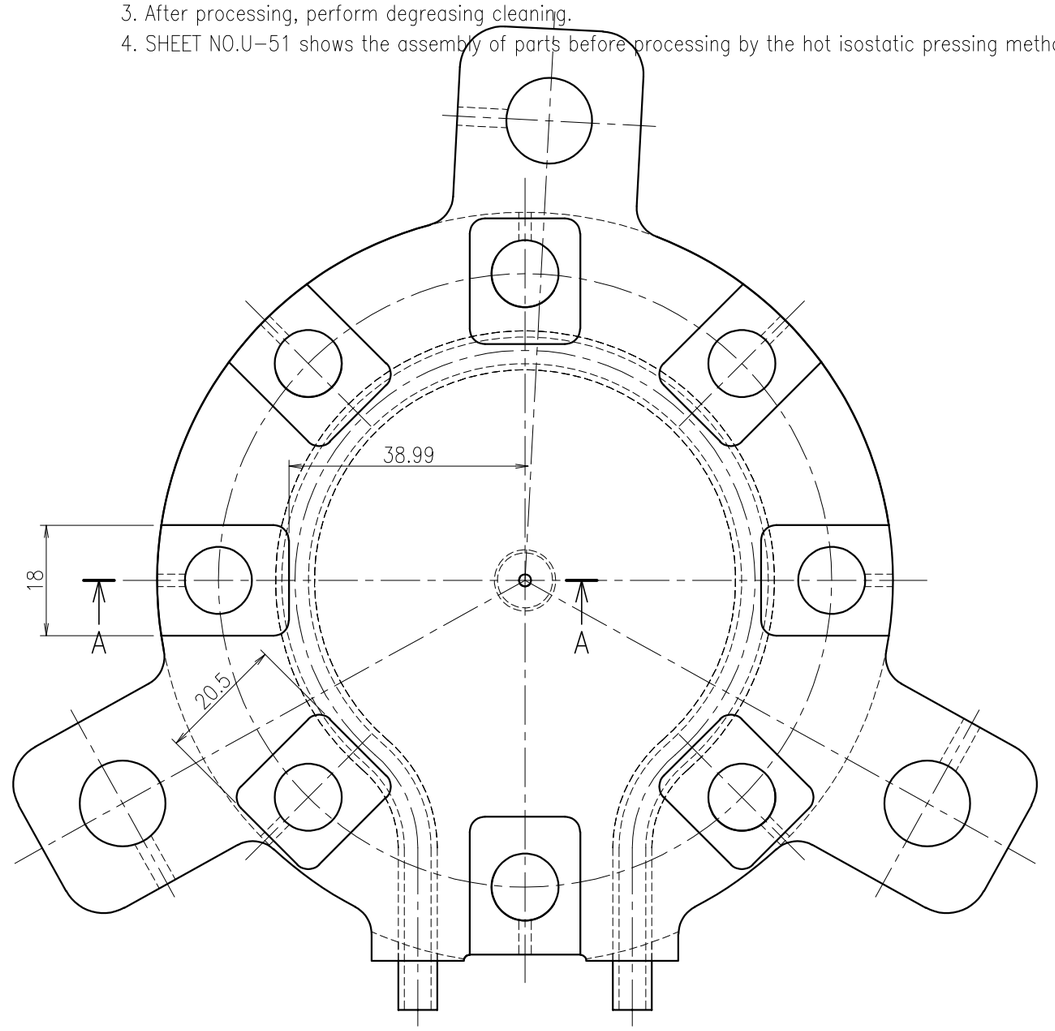

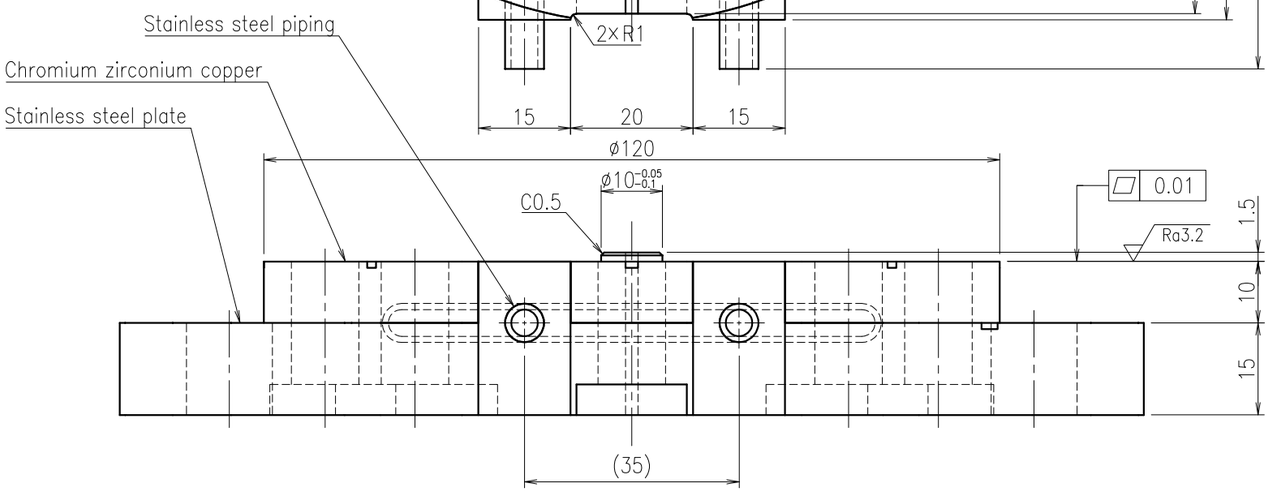

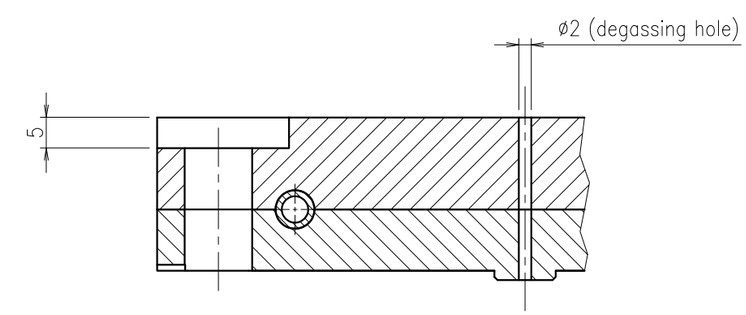

Sectional view A-A

REMARKS		APPROVED	REVIEWED	DRAWN	DATE	PBS TITLE		PROJECTION	SIZE
	QST National Institutes for Quantum and Radiological Science and Technology				2021.11.30	Diagnostics Poloidal Polarimeter			A3
					SCALE 1 : 1	DRAWING TITLE MIRROR_MOUNT (M2E1)	DRAWING NO. JADA-55342DW0100	SHEET NO. U-28	REVISION 0

IO APPROVED BY : VAYAKIS G. DATE : 18 MAR 2022 INTENDED USAGE : FOR TENDER

General Tolerance : ISO 2768 m-K
Surface roughness not indicated : Ra6.3

NOTE
1. This drawing shows a machining drawing of a member molded by the hot isostatic pressing method.
2. The ridges and corners should be chamfered(about C0.2), and there should be no burrs.
3. After processing, perform degreasing cleaning.
4. SHEET NO.U-51 shows the assembly of parts before processing by the hot isostatic pressing method.

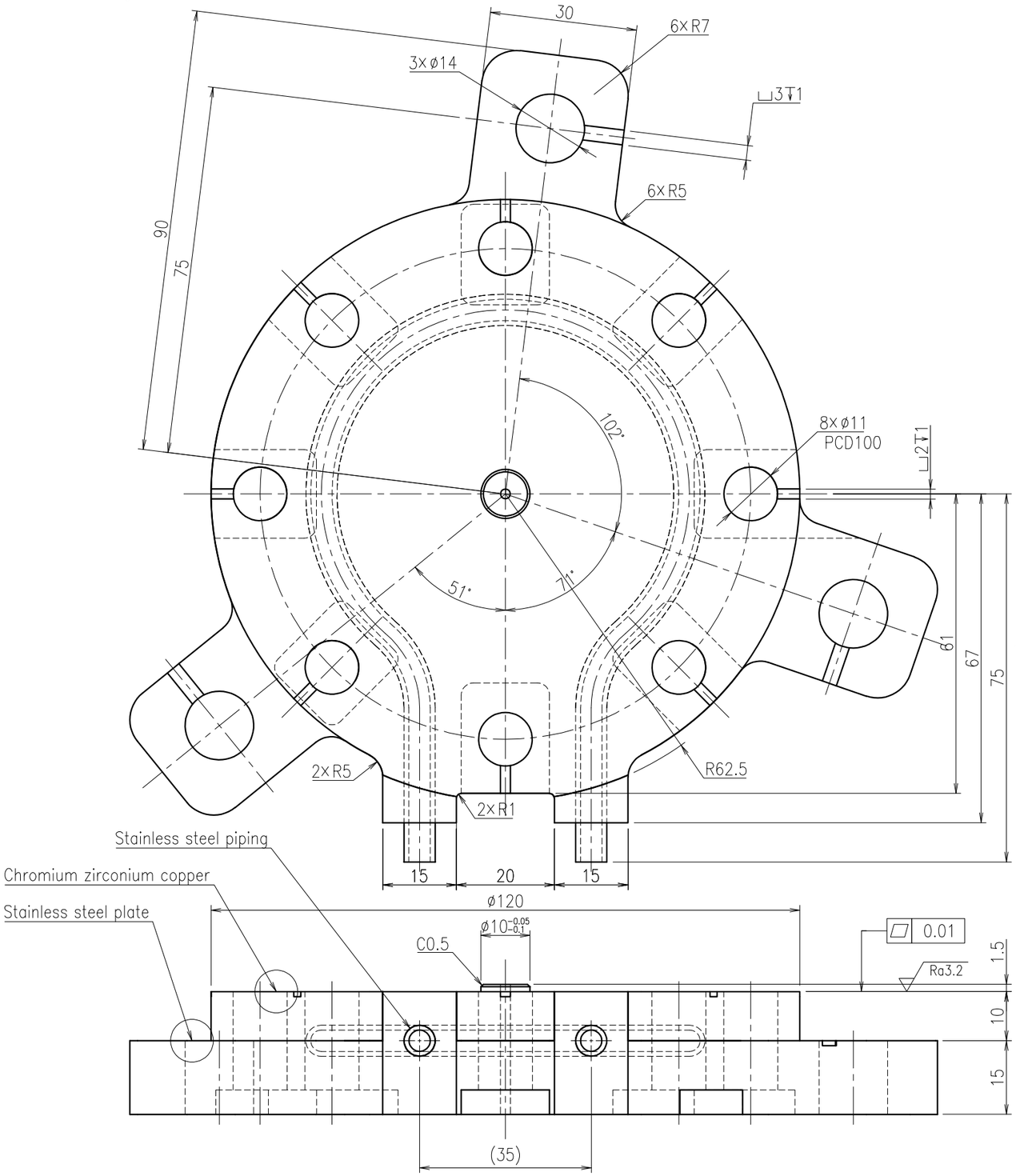

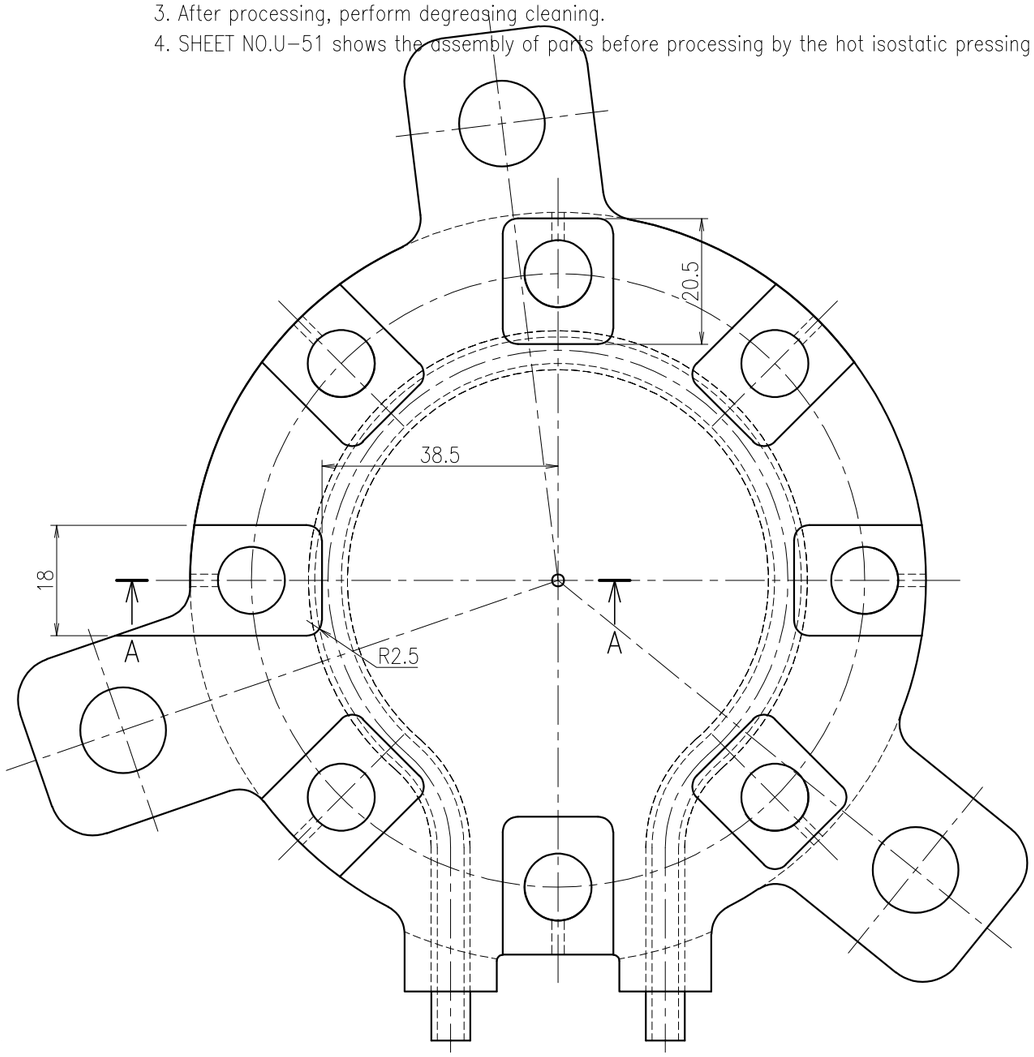

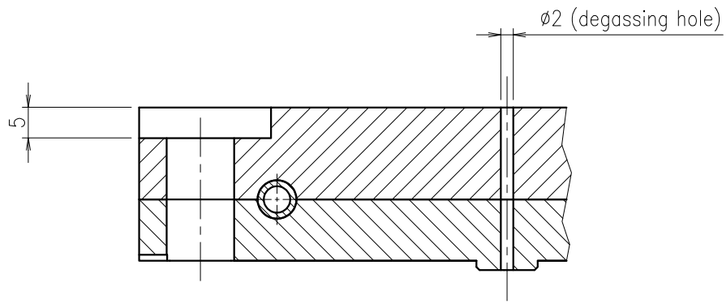

Sectional view A-A

REMARKS		APPROVED	REVIEWED	DRAWN	DATE	PBS TITLE	PROJECTION	SIZE
	QST National Institutes for Quantum and Radiological Science and Technology				2021.11.30	Diagnostics Poloidal Polarimeter		A3
					SCALE 1 : 1	DRAWING TITLE MIRROR_MOUNT (M2E5)	DRAWING NO. JADA-55342DW0100	SHEET NO. U-29 / REVISION 0

General Tolerance : ISO 2768 m-K
Surface roughness not indicated : Ra6.3

NOTE
1. This drawing shows a machining drawing of a member molded by the hot isostatic pressing method.
2. The ridges and corners should be chamfered(about C0.2), and there should be no burrs.
3. After processing, perform degreasing cleaning.
4. SHEET NO.U-51 shows the assembly of parts before processing by the hot isostatic pressing method.

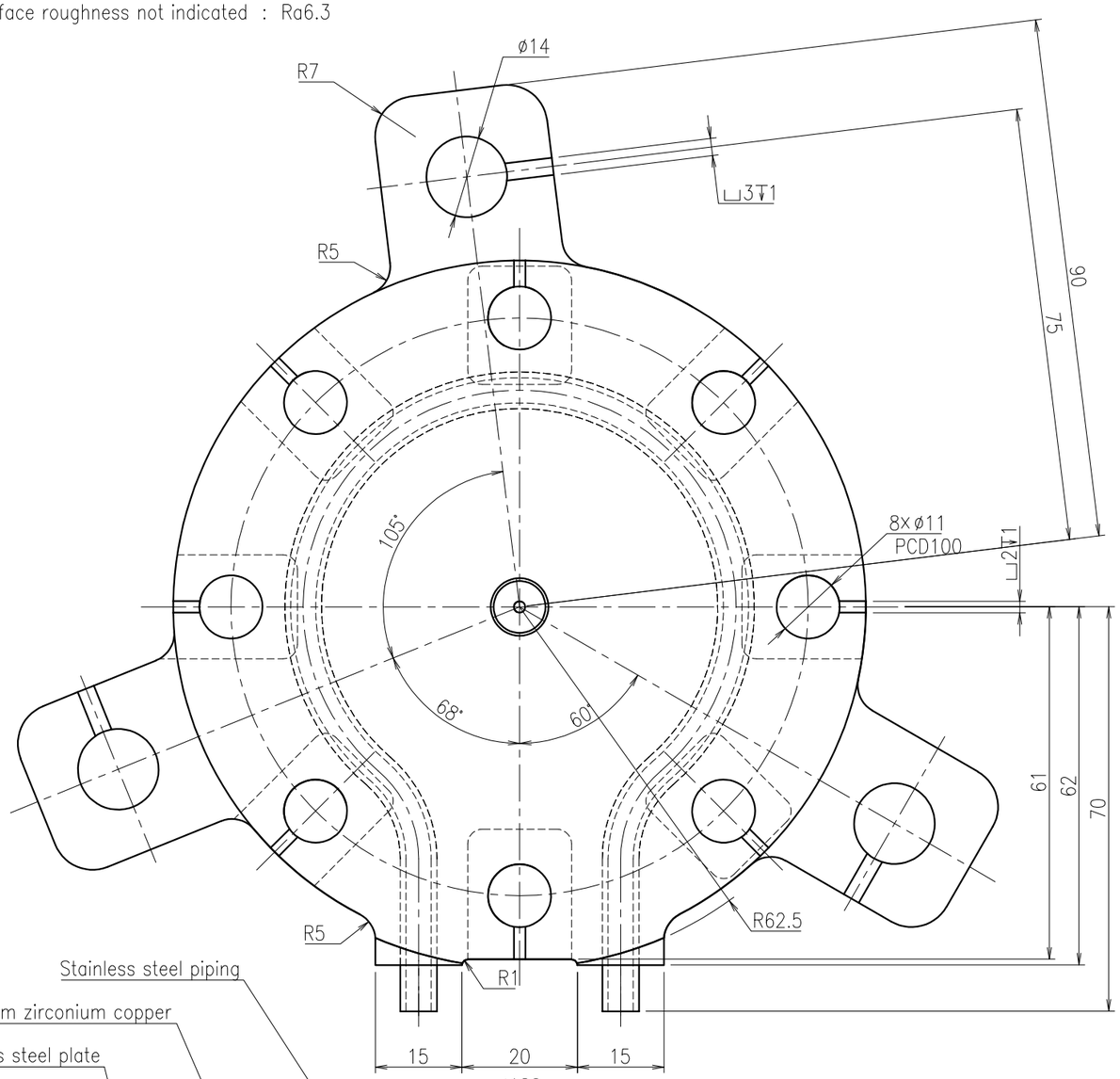

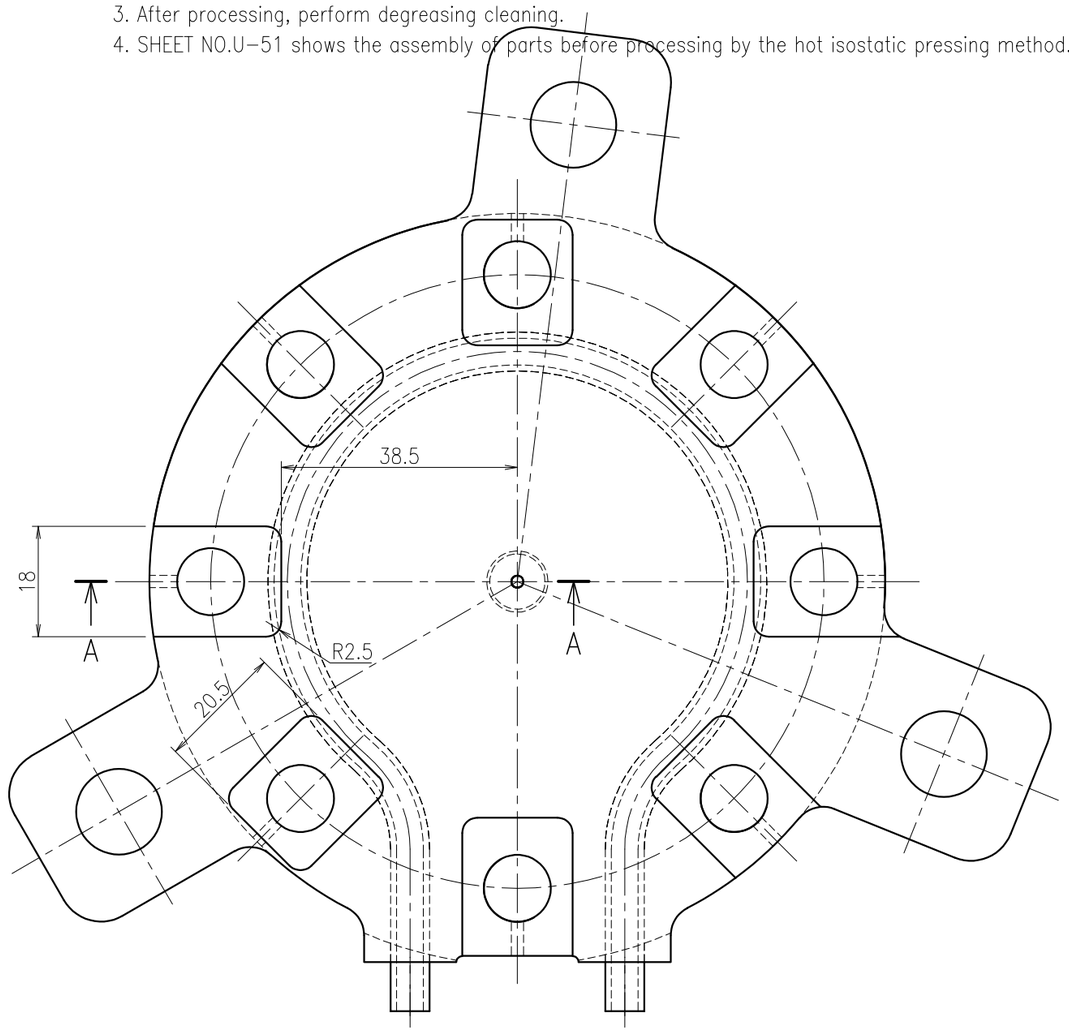

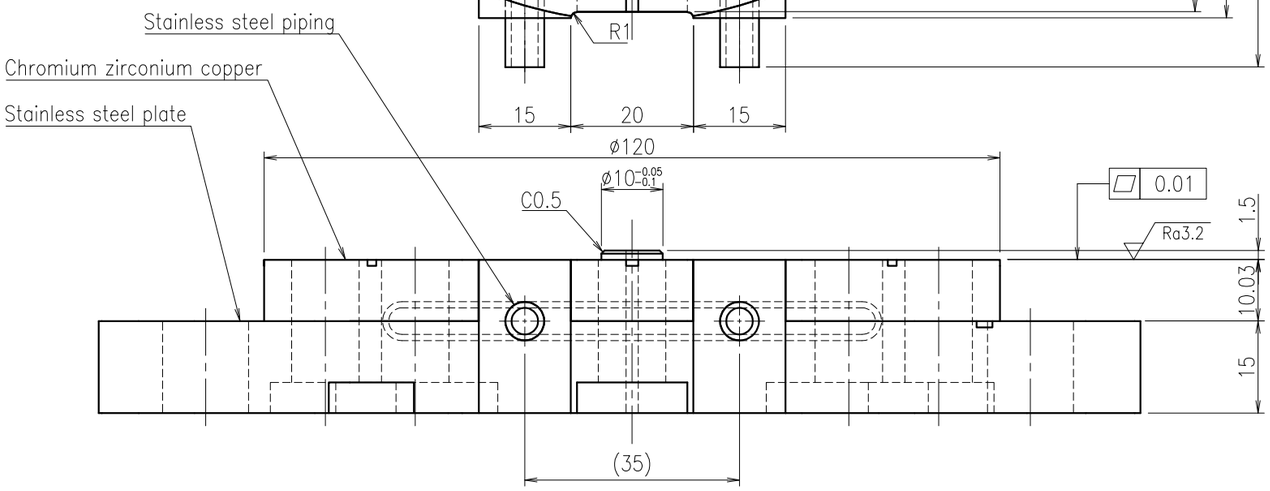

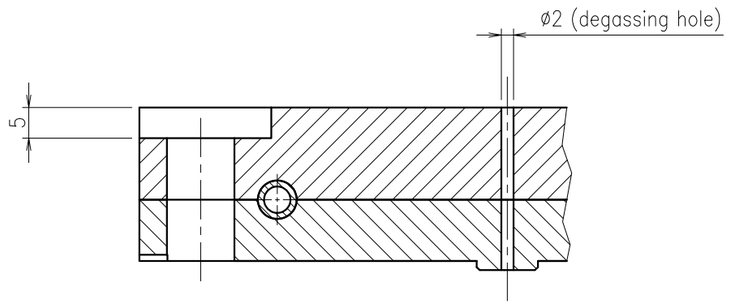

Sectional view A-A

REMARKS		APPROVED	REVIEWED	DRAWN	DATE	PBS TITLE	PROJECTION	SIZE
	QST National Institutes for Quantum and Radiological Science and Technology				2021.11.30	Diagnostics Poloidal Polarimeter		A3
					SCALE 1 : 1	DRAWING TITLE MIRROR_MOUNT (M2E6)	DRAWING NO. JADA-55342DW0100	SHEET NO. U-30 / REVISION 0

IO APPROVED BY : VAYAKIS G. DATE : 18 MAR 2022 INTENDED USAGE : FOR TENDER

General Tolerance : ISO 2768 m-K
Surface roughness not indicated : Ra6.3

NOTE
1. This drawing shows a machining drawing of a member molded by the hot isostatic pressing method.
2. The ridges and corners should be chamfered(about C0.2), and there should be no burrs.
3. After processing, perform degreasing cleaning.
4. SHEET NO.U-51 shows the assembly of parts before processing by the hot isostatic pressing method.

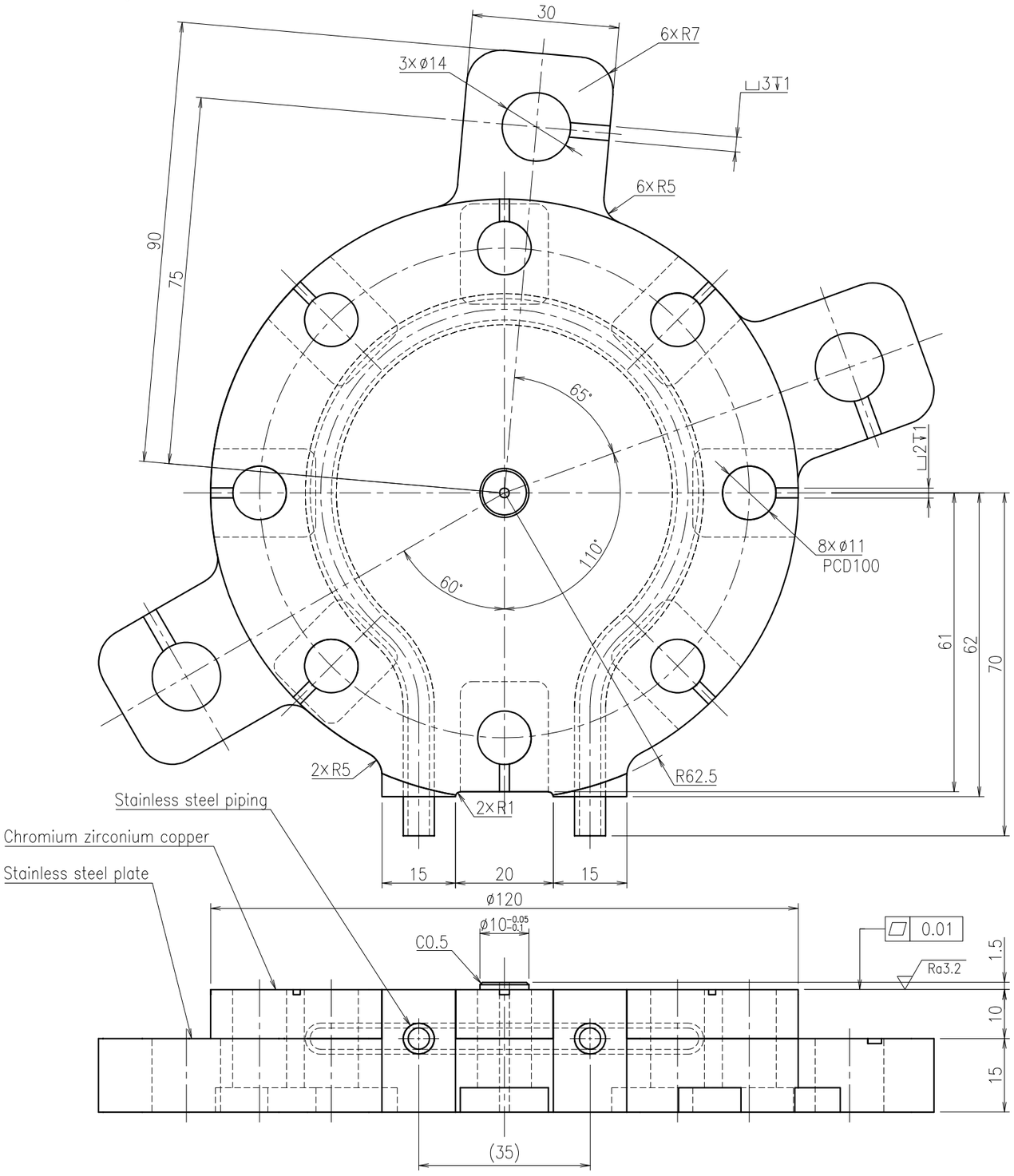

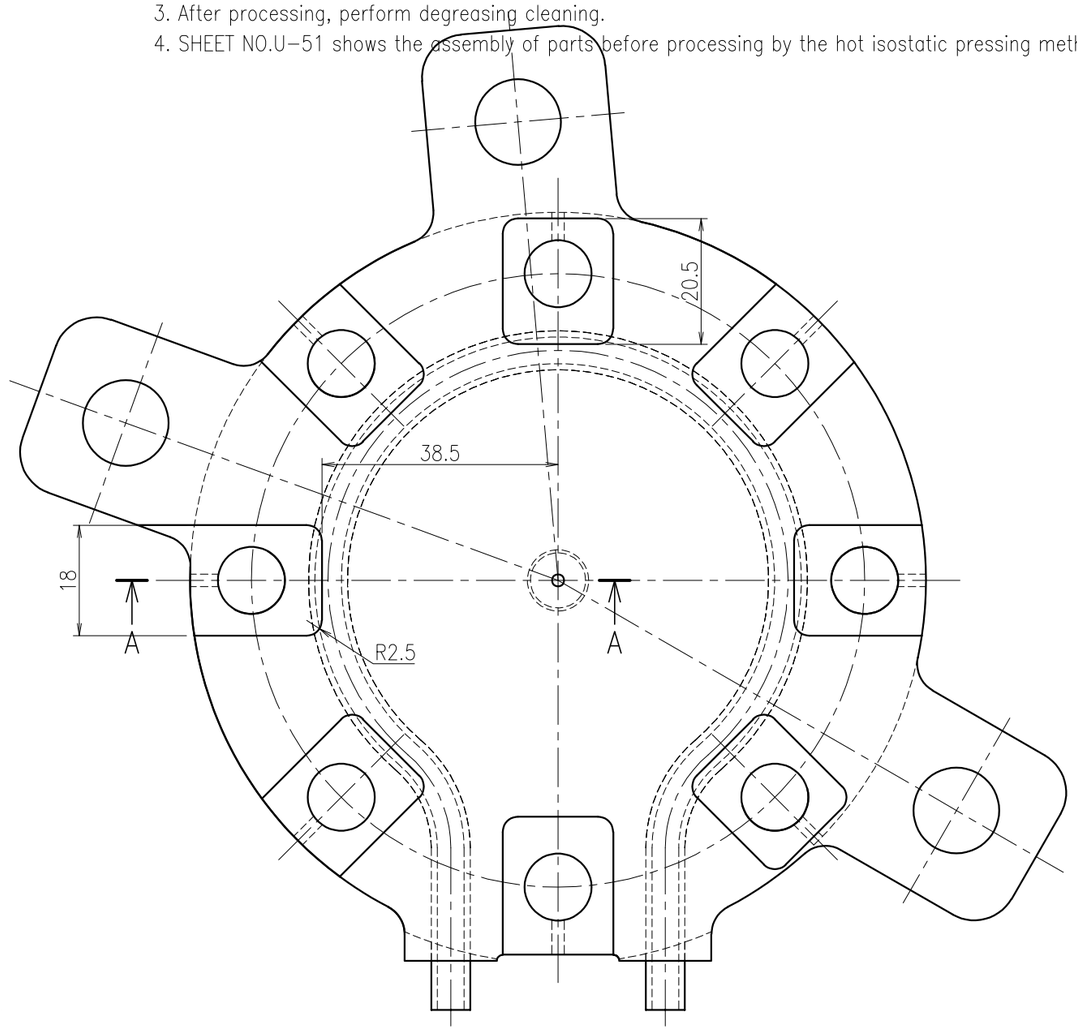

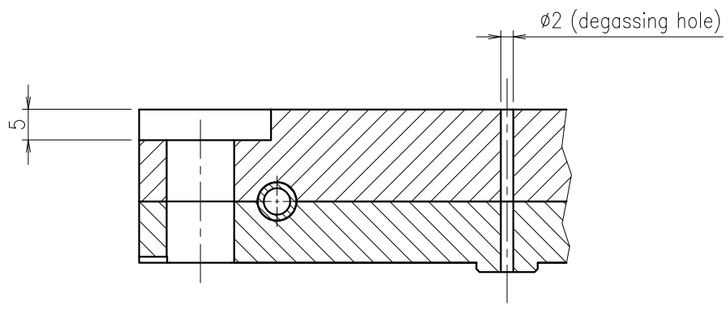

Sectional view A-A

REMARKS		APPROVED	REVIEWED	DRAWN	DATE 2021.11.30	PBS TITLE Diagnostics Poloidal Polarimeter	PROJECTION	SIZE A3
	QST National Institutes for Quantum and Radiological Science and Technology				SCALE 1 : 1	DRAWING TITLE MIRROR_MOUNT (M2E7)	DRAWING NO. JADA-55342DW0100	SHEET NO. U-31 / REVISION 0

IO APPROVED BY : VAYAKIS G. DATE : 18 MAR 2022 INTENDED USAGE : FOR TENDER

General Tolerance : ISO 2768 m-K
Surface roughness not indicated : Ra6.3

NOTE
1. This drawing shows a machining drawing of a member molded by the hot isostatic pressing method.
2. The ridges and corners should be chamfered(about C0.2), and there should be no burrs.
3. After processing, perform degreasing cleaning.
4. SHEET NO.U-51 shows the assembly of parts before processing by the hot isostatic pressing method.

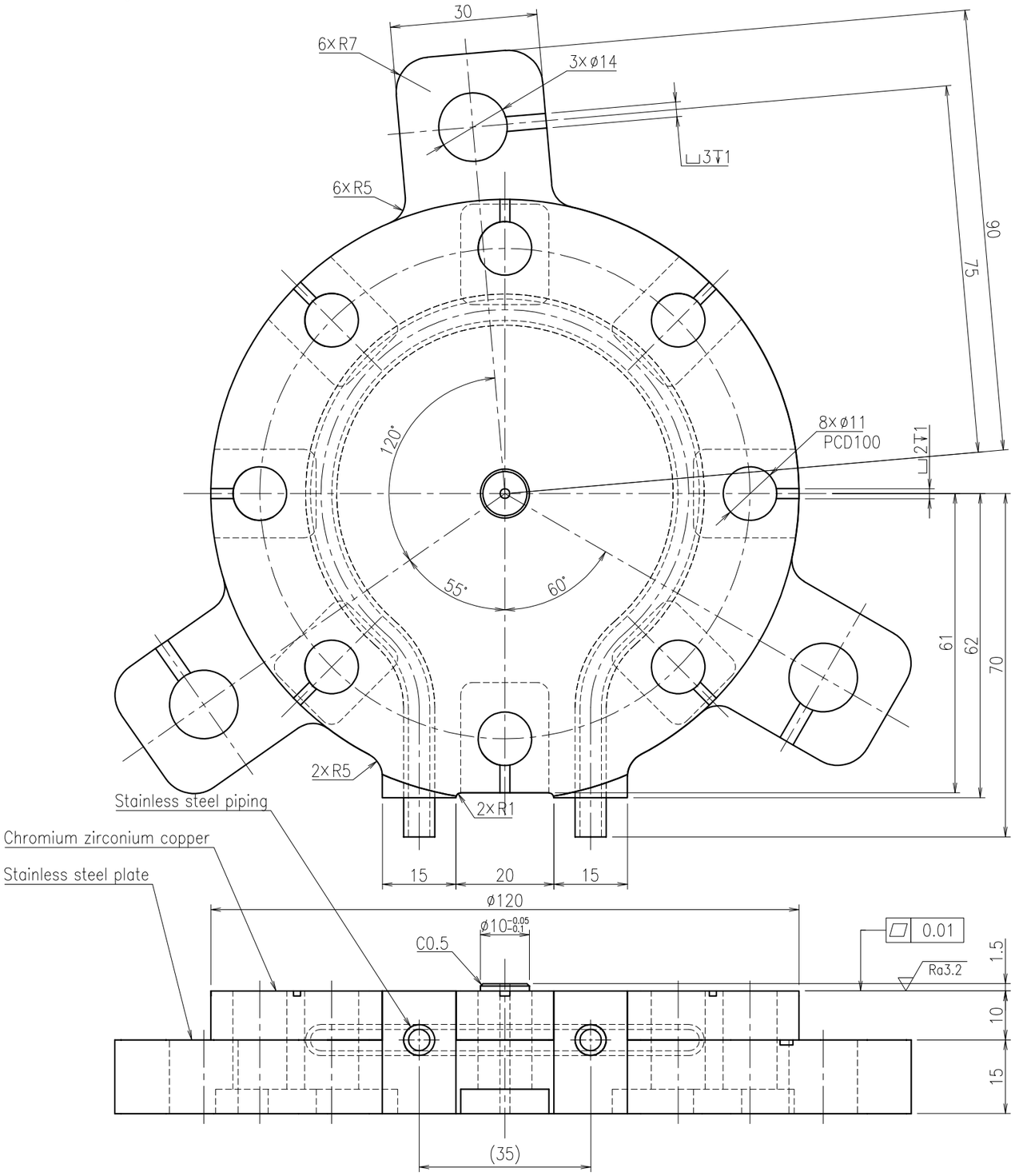

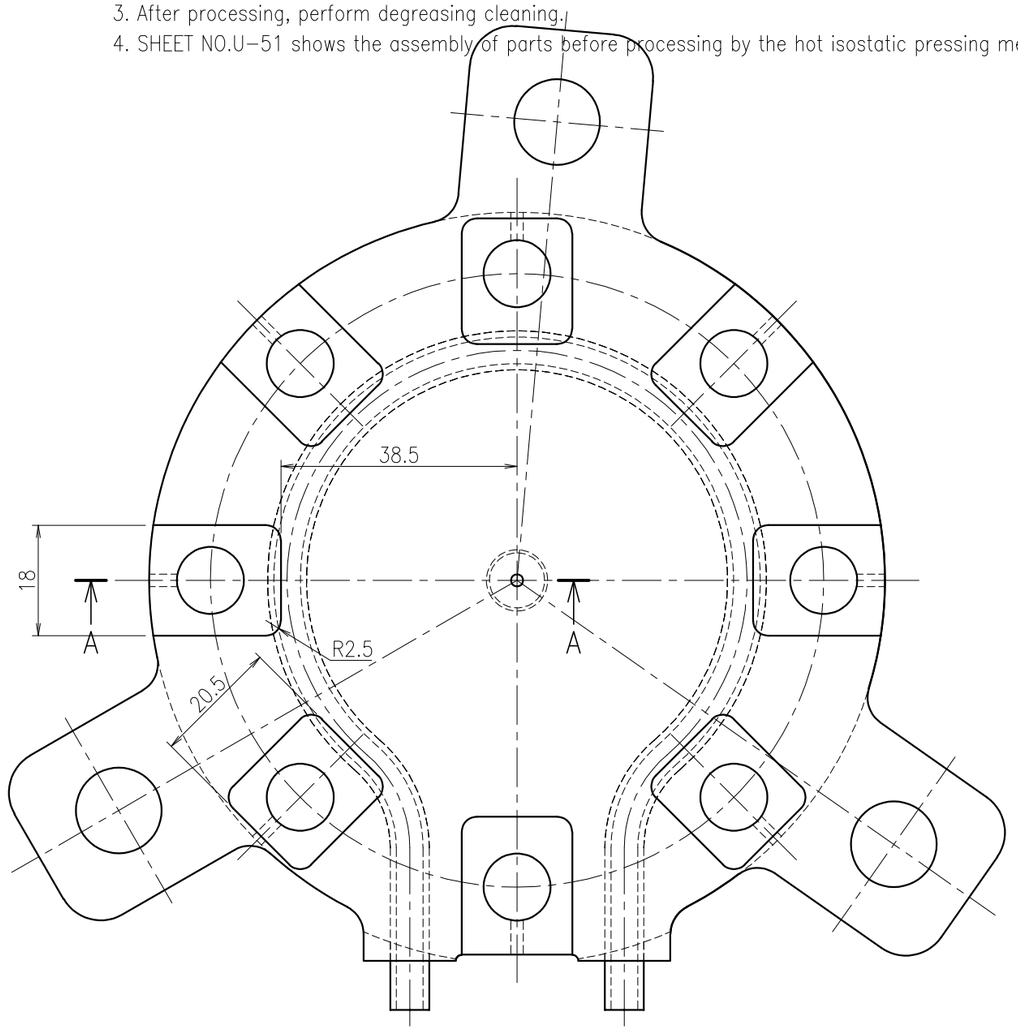

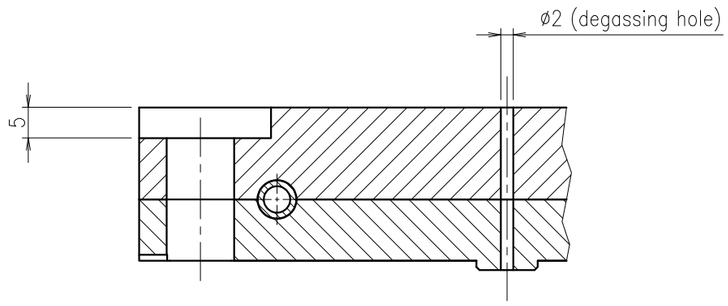

Sectional view A-A

REMARKS		APPROVED	REVIEWED	DRAWN	DATE	PBS TITLE	PROJECTION	SIZE
	QST National Institutes for Quantum and Radiological Science and Technology				2021.11.30	Diagnostics Poloidal Polarimeter		A3
					SCALE 1 : 1	DRAWING TITLE MIRROR_MOUNT (M2E8)	DRAWING NO. JADA-55342DW0100	SHEET NO. U-32 / REVISION 0

General Tolerance : ISO 2768 m-K
Surface roughness not indicated : Ra6.3

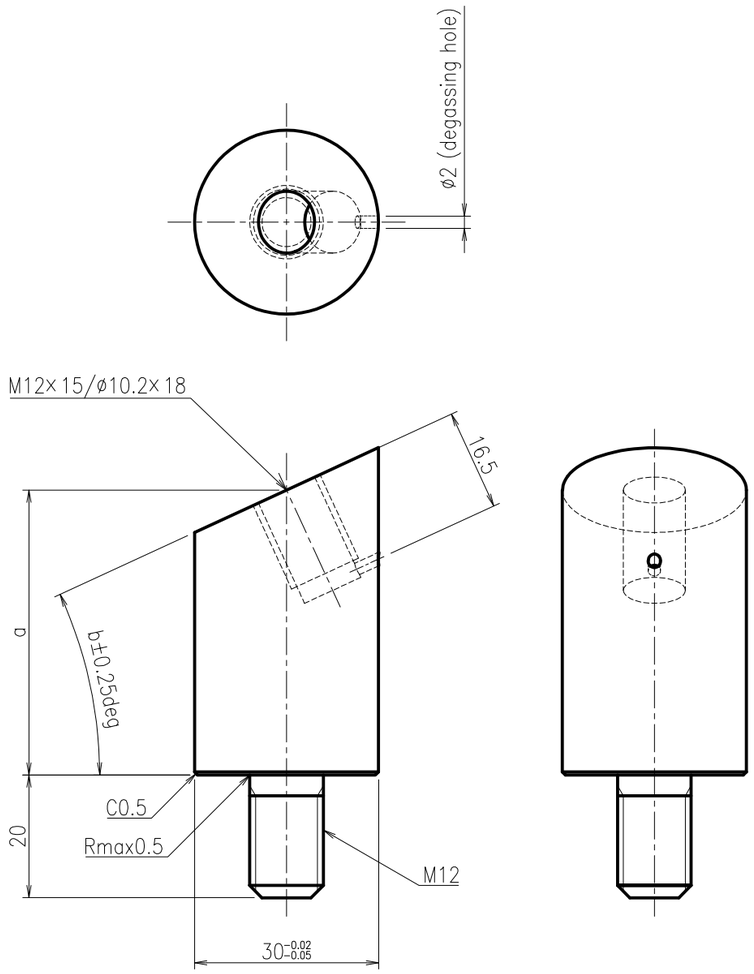

Mirror_number	Work	Dimension a	Dimension b	Quantity
M1E1	A	27.3 (mm)	16.0 (deg)	1
	B	58.8	16.0	1
	C	58.9	16.0	1
M1E5	A	36.0	10.2	1
	B	47.8	10.2	1
	C	58.8	10.2	1
M1E6	A	29.0	14.7	1
	B	48.9	14.7	1
	C	64.8	14.7	1
M1E7	A	31.8	11.0	1
	B	39.4	11.0	1
	C	59.1	11.0	1
M1E8	A	33.1	9.6	1
	B	39.3	9.6	1
	C	55.0	9.6	1
M2E1	A	35.9	9.8	1
	B	43.6	9.8	1
	C	57.8	9.8	1
M2E5	A	33.6	9.1	1
	B	52.9	9.1	1
	C	53.7	9.1	1
M2E6	A	35.0	14.7	1
	B	41.2	14.7	1
	C	65.4	14.7	1
M2E7	A	37.1	9.3	1
	B	49.9	9.3	1
	C	52.3	9.3	1
M2E8	A	35.2	13.4	1
	B	39.8	13.4	1
	C	63.5	13.4	1

NOTE
1. This drawing shows the mirror rod of the UEMM.
2. The material of these part is SS316LN-IG.
3. The ridges and corners should be chamfered(about C0.2), and there should be no burrs.
4. After processing, perform degreasing cleaning.

REMARKS		APPROVED	REVIEWED	DRAWN	DATE 2021.11.30	PBS TITLE Diagnostics Poloidal Polarimeter	PROJECTION	SIZE A3
	QST National Institutes for Quantum and Radiological Science and Technology				SCALE 1 : 1	DRAWING TITLE UEMM_MIRROR_ROD	DRAWING NO. JADA-55342DW0100	SHEET NO. U-33 / REVISION 0

IO APPROVED BY : VAYAKIS G. DATE : 18 MAR 2022 INTENDED USAGE : FOR TENDER

General Tolerance : ISO 2768 m-K
Surface roughness not indicated : Ra6.3

Name	Material	Quantity	Remarks
PIPING_SUPPORT_TYPE_8	SS316LN-IG	1	
PIPING_SUPPORT_TYPE_9	SS316LN-IG	1	

Name	Material	Quantity	Remarks
PIPING_SUPPORT_TYPE_1	SS316LN-IG	14	
PIPING_SUPPORT_TYPE_2	SS316LN-IG	1	
PIPING_SUPPORT_TYPE_3	SS316LN-IG	1	
PIPING_SUPPORT_TYPE_4	SS316LN-IG	1	
PIPING_SUPPORT_TYPE_5	SS316LN-IG	1	
PIPING_SUPPORT_TYPE_6	SS316LN-IG	3	
PIPING_SUPPORT_TYPE_7	SS316LN-IG	2	

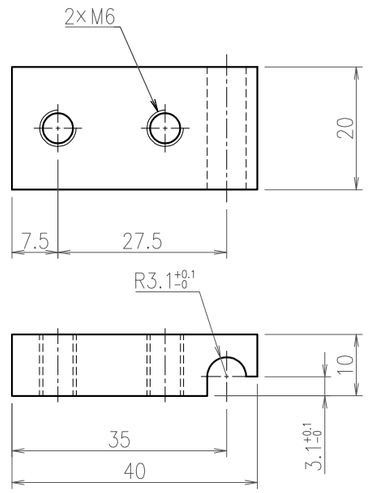

PIPING_SUPPORT_TYPE_1

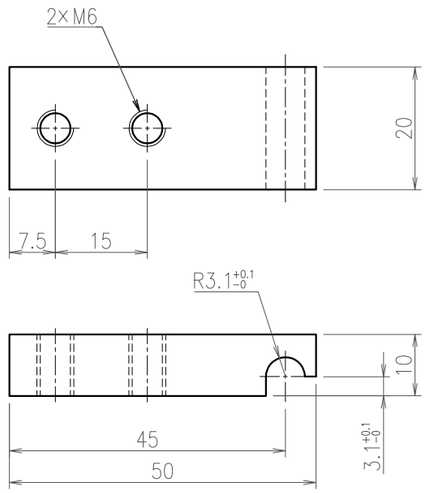

PIPING_SUPPORT_TYPE_2

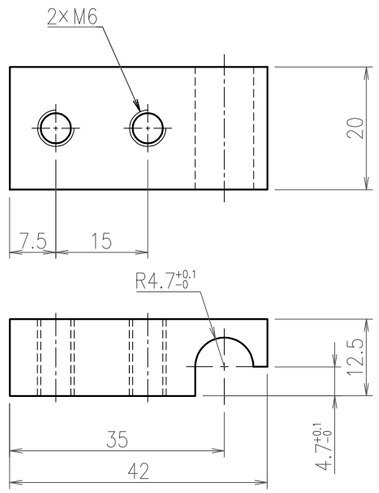

PIPING_SUPPORT_TYPE_3

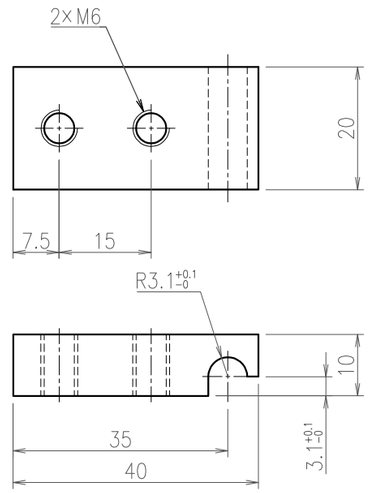

PIPING_SUPPORT_TYPE_4

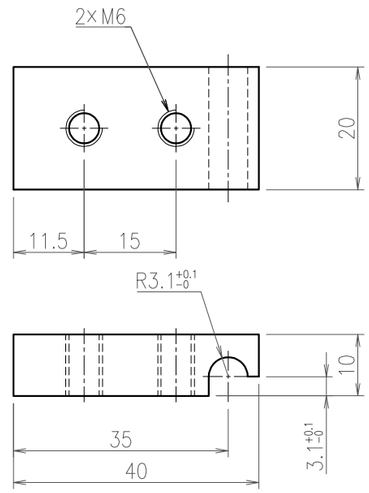

PIPING_SUPPORT_TYPE_5

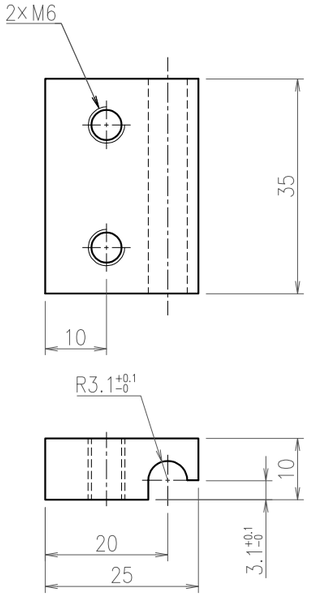

PIPING_SUPPORT_TYPE_6

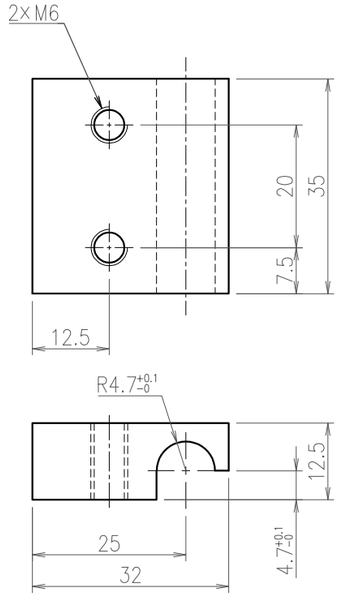

PIPING_SUPPORT_TYPE_7

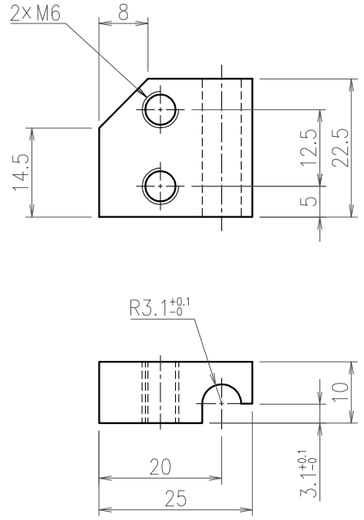

PIPING_SUPPORT_TYPE_8

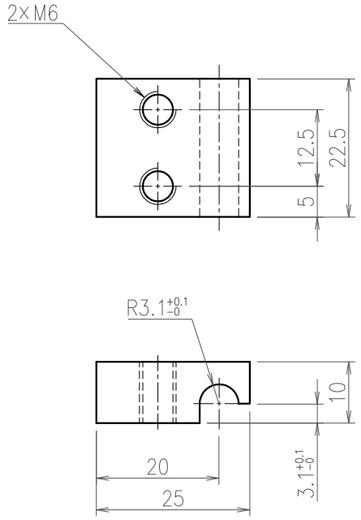

PIPING_SUPPORT_TYPE_9

NOTE
1. The ridges and corners should be chamfered(about C0.2), and there should be no burrs.
2. After processing, perform degreasing cleaning.

REMARKS		APPROVED	REVIEWED	DRAWN	DATE 2021.11.30	PBS TITLE Diagnostics Poloidal Polarimeter		PROJECTION	SIZE A3
	QST National Institutes for Quantum and Radiological Science and Technology				SCALE 1 : 1	DRAWING TITLE PIPING_SUPPORT (1/3)	DRAWING NO. JADA-55342DW0100	SHEET NO. U-34	REVISION 0

General Tolerance : ISO 2768 m-K
Surface roughness not indicated : Ra6.3

Name	Material	Quantity	Remarks
PIPING_SUPPORT_TYPE_10	SS316LN-IG	14	
PIPING_SUPPORT_TYPE_11	SS316LN-IG	1	
PIPING_SUPPORT_TYPE_12	SS316LN-IG	1	
PIPING_SUPPORT_TYPE_13	SS316LN-IG	1	
PIPING_SUPPORT_TYPE_14	SS316LN-IG	1	

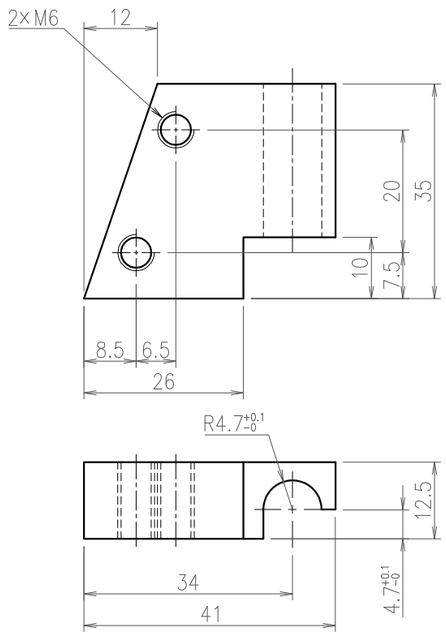

PIPING_SUPPORT_TYPE_10

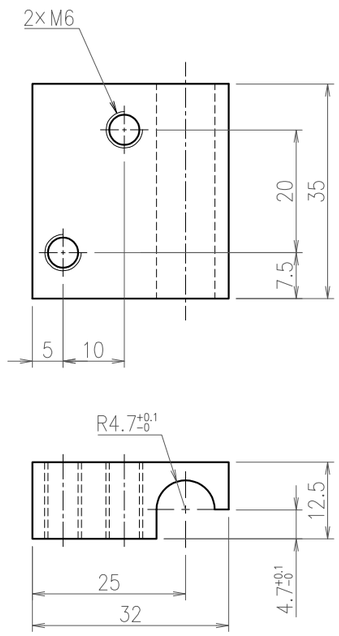

PIPING_SUPPORT_TYPE_11

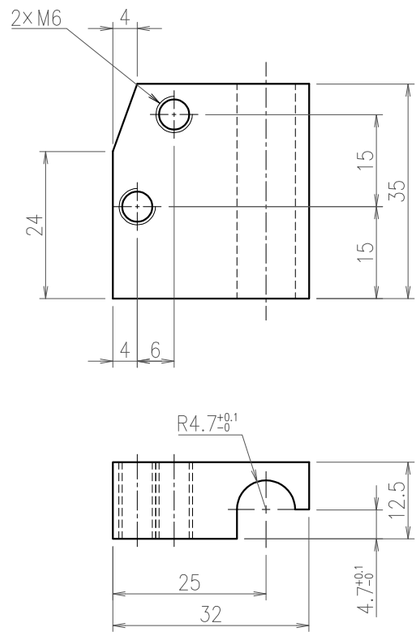

PIPING_SUPPORT_TYPE_12

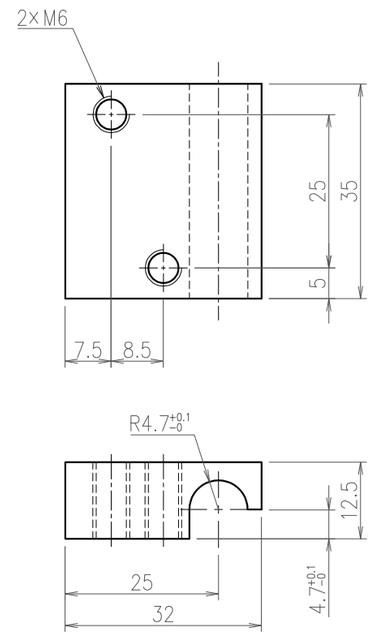

PIPING_SUPPORT_TYPE_13

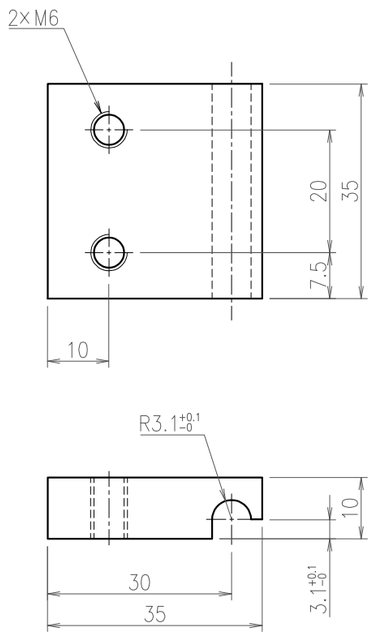

PIPING_SUPPORT_TYPE_14

NOTE
1. The ridges and corners should be chamfered(about C0.2), and there should be no burrs.
2. After processing, perform degreasing cleaning.

REMARKS		APPROVED	REVIEWED	DRAWN	DATE 2021.11.30	PBS TITLE Diagnostics Poloidal Polarimeter	PROJECTION	SIZE A3
	QST National Institutes for Quantum and Radiological Science and Technology				SCALE 1 : 1	DRAWING TITLE PIPING_SUPPORT (2/3)	DRAWING NO. JADA-55342DW0100 / SHEET NO. U-35	REVISION 0

General Tolerance : ISO 2768 m-K
Surface roughness not indicated : Ra6.3

Name	Material	Quantity	Remarks
PIPING_SUPPORT_PILLAR_TYPE_1	SS316LN-IG	2	
PIPING_SUPPORT_PILLAR_TYPE_2	SS316LN-IG	1	
PIPING_SUPPORT_COVER_TYPE_1	SS316LN-IG	2	
PIPING_SUPPORT_COVER_TYPE_2	SS316LN-IG	1	

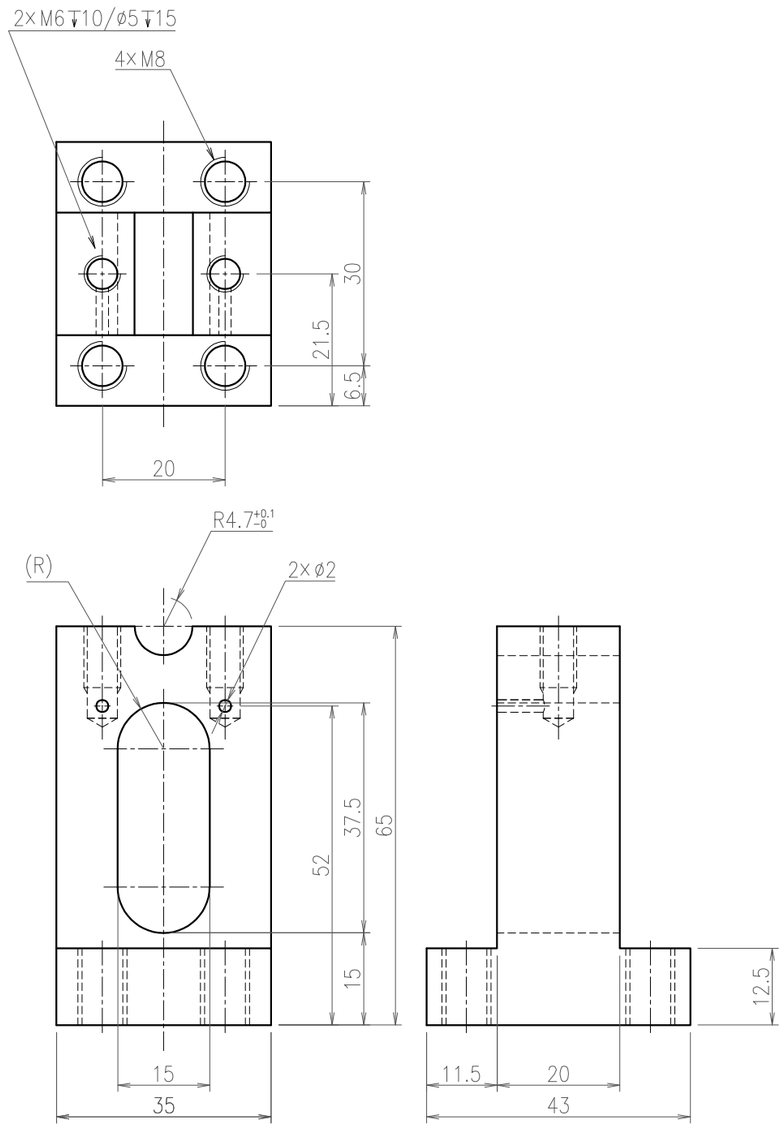

PIPING_SUPPORT_PILLAR_TYPE_1

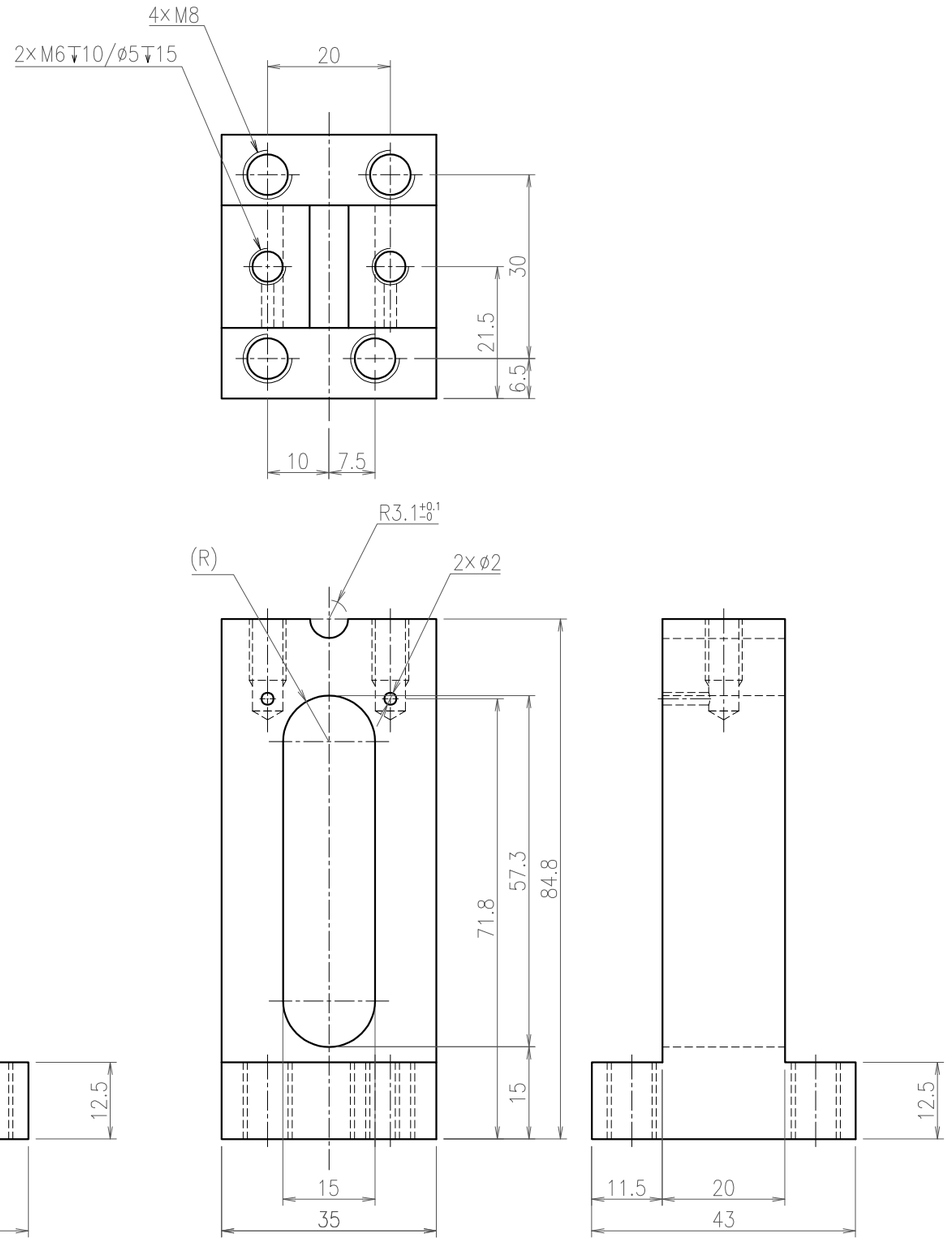

PIPING_SUPPORT_PILLAR_TYPE_2

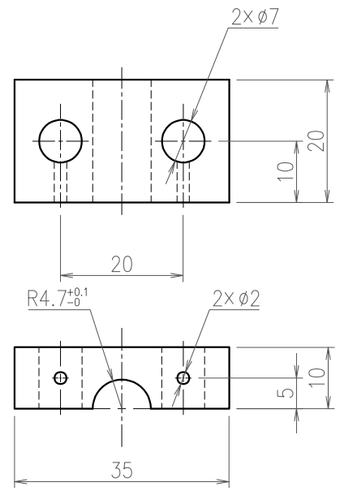

PIPING_SUPPORT_COVER_TYPE_1

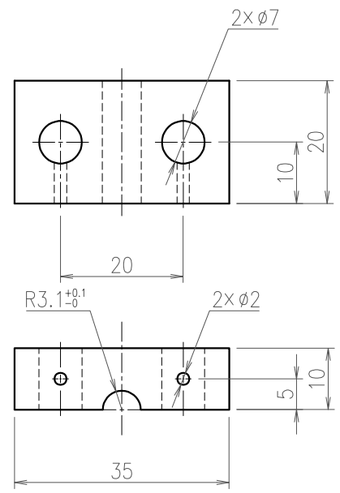

PIPING_SUPPORT_COVER_TYPE_2

NOTE
1. The ridges and corners should be chamfered(about C0.2), and there should be no burrs.
2. After processing, perform degreasing cleaning.

REMARKS	APPROVED	REVIEWED	DRAWN	DATE	PBS TITLE	PROJECTION	SIZE
QST National Institutes for Quantum and Radiological Science and Technology				2021.11.30	Diagnostics Poloidal Polarimeter		A3
				SCALE 1 : 1	DRAWING TITLE PIPING_SUPPORT (3/3)	DRAWING NO. JADA-55342DW0100	SHEET NO. U-36 / REVISION 0

Name	Material	Quantity	Remarks
UPPER_FIRST_MIRROR_PIPING_TYPE_1	SS316LN-IG	1	
UPPER_FIRST_MIRROR_PIPING_TYPE_2	SS316LN-IG	1	
UPPER_FIRST_MIRROR_PIPING_TYPE_3	SS316LN-IG	1	
UPPER_FIRST_MIRROR_PIPING_TYPE_4	SS316LN-IG	1	
UPPER_FIRST_MIRROR_PIPING_TYPE_5	SS316LN-IG	1	

NOTE

1. This drawing shows the cooling water piping of the first mirror of the UEMM.
2. The diameter of the pipe is 6.35 mm and the thickness is 0.89 mm.
3. The bending radius of the pipe is about 15 mm.
4. After processing, perform degreasing cleaning.
5. These pipes will be welded after the brazing shown in sheet U-10 or U-11 is completed and after the mirror assemblies are bolted to M1 or M2 base plates.
   The pipe dimension should be adjusted to the assembled mirror assemblies and base plates.

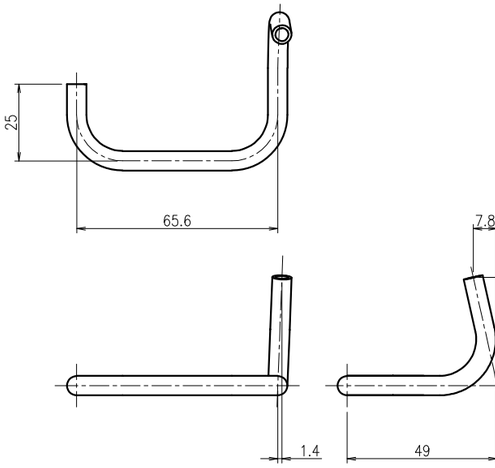

UEMM_FIRST_MIRROR_PIPING_TYPE_1

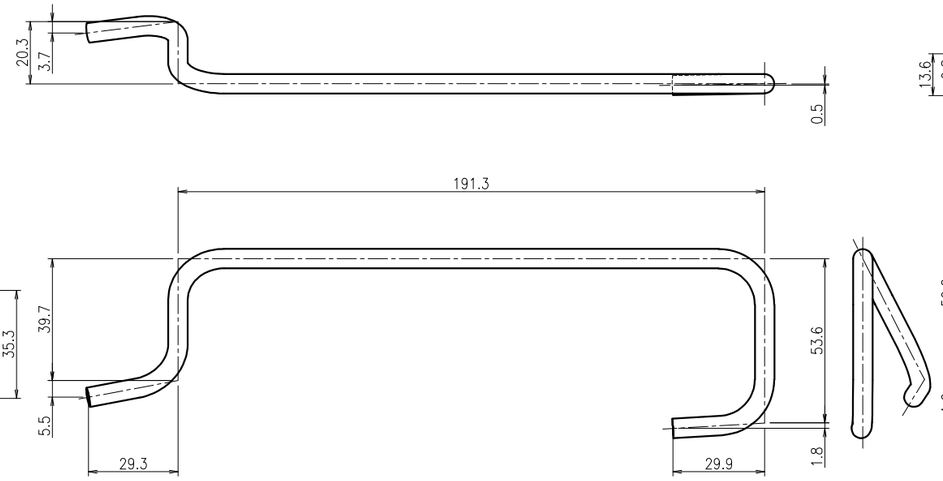

UEMM_FIRST_MIRROR_PIPING_TYPE_2

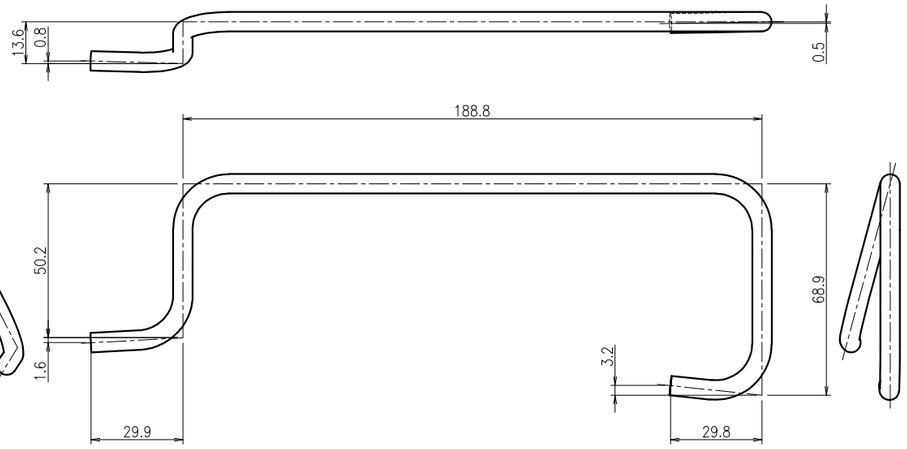

UEMM_FIRST_MIRROR_PIPING_TYPE_3

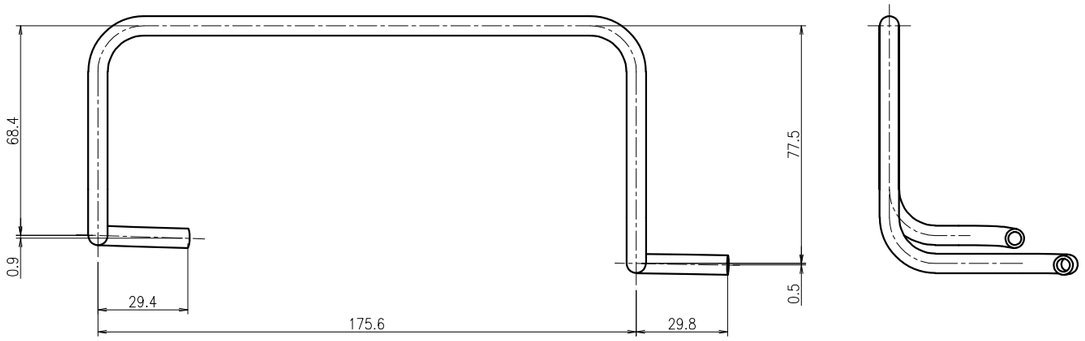

UEMM_FIRST_MIRROR_PIPING_TYPE_4

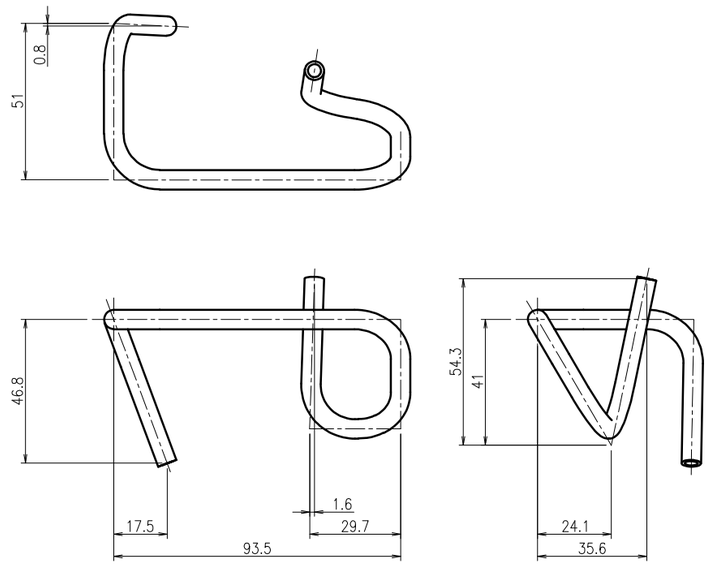

UEMM_FIST_MIRROR_PIPING_TYPE_5

REMARKS		APPROVED	REVIEWED	DRAWN	DATE	PBS TITLE		PROJECTION	SIZE
	QST National Institutes for Quantum and Radiological Science and Technology				2021.11.30	Diagnostics Poloidal Polarimeter			A3
					SCALE 1 : 3	DRAWING TITLE UEMM_FIRST_MIRROR_PIPING (1/2)	DRAWING NO. JADA-55342DW0100	SHEET NO. U-37	REVISION 0

Name	Material	Quantity	Remarks
UPPER_FIRST_MIRROR_PIPING_TYPE_6	SS316LN-IG	1	

NOTE

1. This drawing shows the cooling water piping of the first mirror of the UEMM.
2. The diameter of the pipe is 6.35 mm and the thickness is 0.89 mm.
3. The bending radius of the pipe is about 15 mm.
4. After processing, perform degreasing cleaning.
5. These pipes will be welded after the brazing shown in sheet U-10 or U-11 is completed and after the mirror assemblies are bolted to M1 or M2 base plates.
   The pipe dimension should be adjusted to the assembled mirror assemblies and base plates.

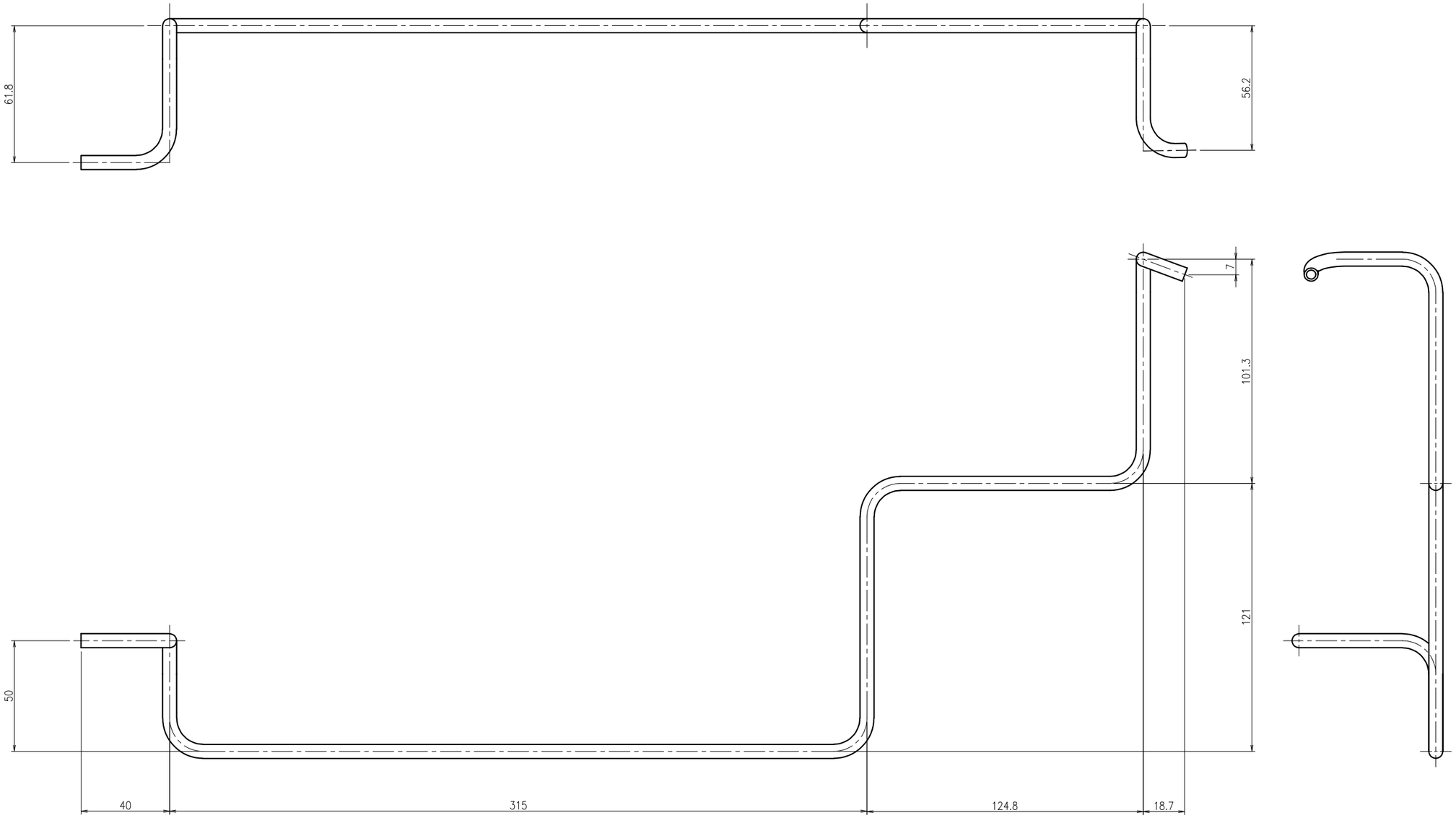

UEMM_FIRST_MIRROR_PIPING_TYPE_6

REMARKS		APPROVED	REVIEWED	DRAWN	DATE 2021.11.30	PBS TITLE Diagnostics Poloidal Polarimeter		PROJECTION	SIZE A3
	QST National Institutes for Quantum and Radiological Science and Technology				SCALE 1 : 3	DRAWING TITLE UEMM_FIRST_MIRROR_PIPING (2/2)	DRAWING NO. JADA-55342DW0100	SHEET NO. U-38	REVISION 0

Name	Material	Quantity	Remarks
UPPER_SECOND_MIRROR_PIPING_TYPE_1	SS316LN-IG	1	
UPPER_SECOND_MIRROR_PIPING_TYPE_2	SS316LN-IG	1	
UPPER_SECOND_MIRROR_PIPING_TYPE_3	SS316LN-IG	1	
UPPER_SECOND_MIRROR_PIPING_TYPE_4	SS316LN-IG	1	
UPPER_SECOND_MIRROR_PIPING_TYPE_5	SS316LN-IG	1	
UPPER_SECOND_MIRROR_PIPING_TYPE_6	SS316LN-IG	1	

NOTE

1. This drawing shows the cooling water piping of the first mirror of the UEMM.
2. The diameter of the pipe is 6.35 mm and the thickness is 0.89 mm.
3. The bending radius of the pipe is about 15 mm.
4. After processing, perform degreasing cleaning.
5. These pipes will be welded after the brazing shown in sheet U-10 or U-11 is completed and after the mirror assemblies are bolted to M1 or M2 base plates. The pipe dimension should be adjusted to the assembled mirror assemblies and base plates.

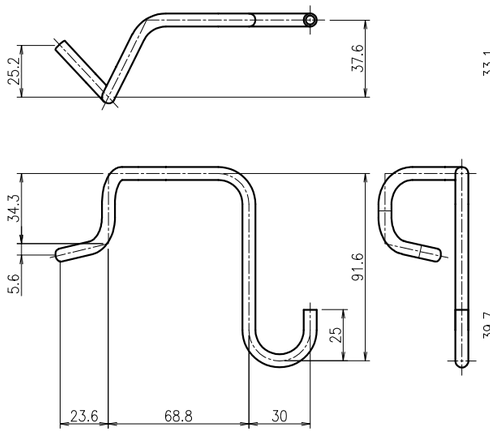

UEMM_SECOND_MIRROR_PIPING_TYPE_1

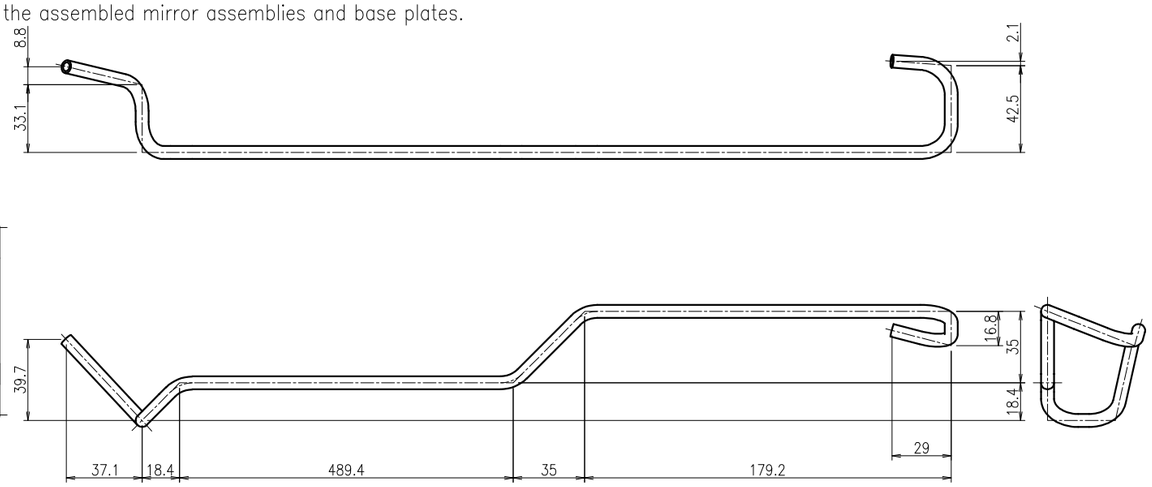

UEMM_SECOND_MIRROR_PIPING_TYPE_2

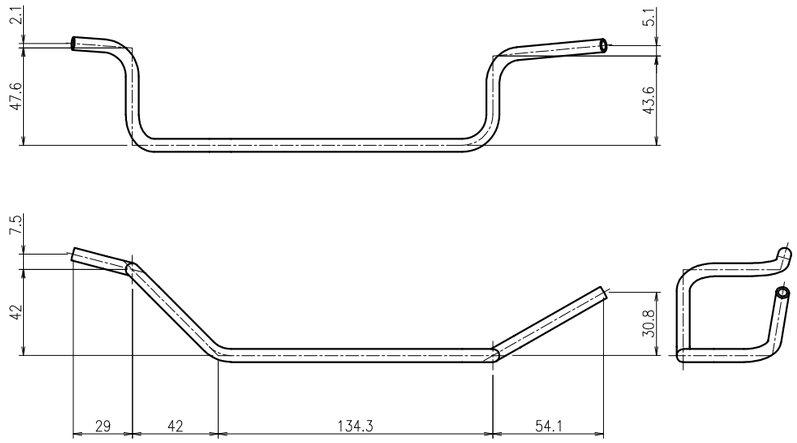

UEMM_SECOND_MIRROR_PIPING_TYPE_3

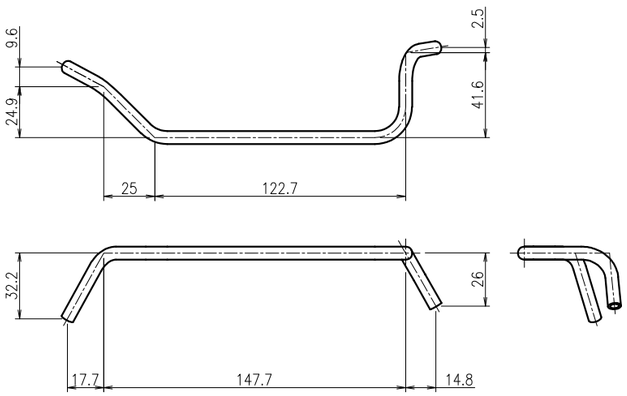

UEMM_SECOND_MIRROR_PIPING_TYPE_4

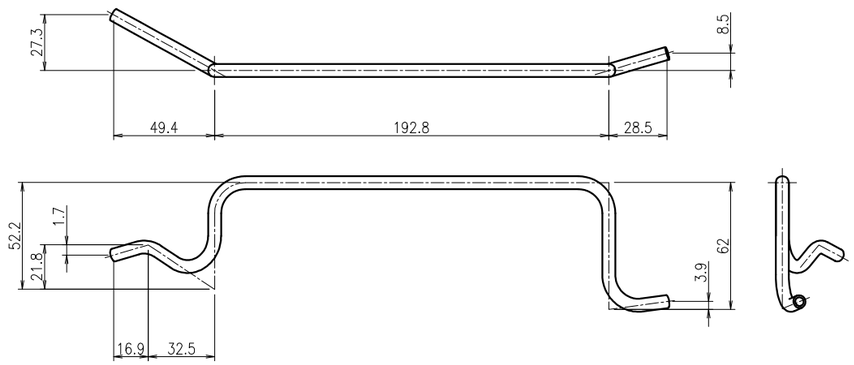

UEMM_SECOND_MIRROR_PIPING_TYPE_5

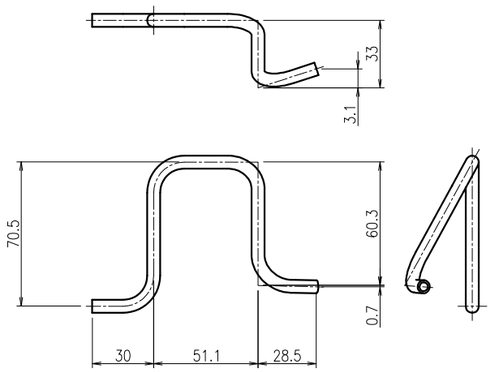

UEMM_SECOND_MIRROR_PIPING_TYPE_6

REMARKS		APPROVED	REVIEWED	DRAWN	DATE 2021.11.30	PBS TITLE Diagnostics Poloidal Polarimeter		PROJECTION	SIZE A3
	QST National Institutes for Quantum and Radiological Science and Technology				SCALE 1 : 3	DRAWING TITLE UEMM_SECOND_MIRROR_PIPING	DRAWING NO. JADA-55342DW0100	SHEET NO. U-39	REVISION 0

Name	Material	Quantity	Remarks
UPPER_MODULE_SUPPLY_PIPING	SS316LN-IG	1	
UPPER_MODULE_RETURN_PIPING	SS316LN-IG	1	

NOTE

1. This drawing shows the cooling water piping of the first mirror of the UEMM.
2. The diameter of the pipe is 9.53 mm and the thickness is 0.89 mm.
3. The bending radius of the pipe is about 24 mm.
4. After processing, perform degreasing cleaning.
5. These pipes will be welded after the brazing shown in sheet U-10 or U-11 is completed and after the mirror assemblies are bolted to M1 or M2 base plates.
   The pipe dimension should be adjusted to the assembled mirror assemblies and base plates.

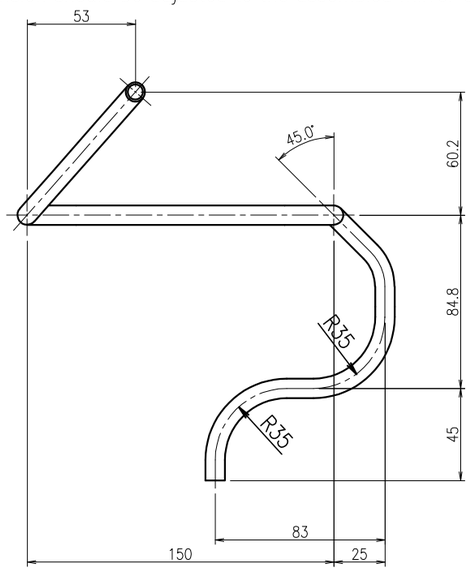

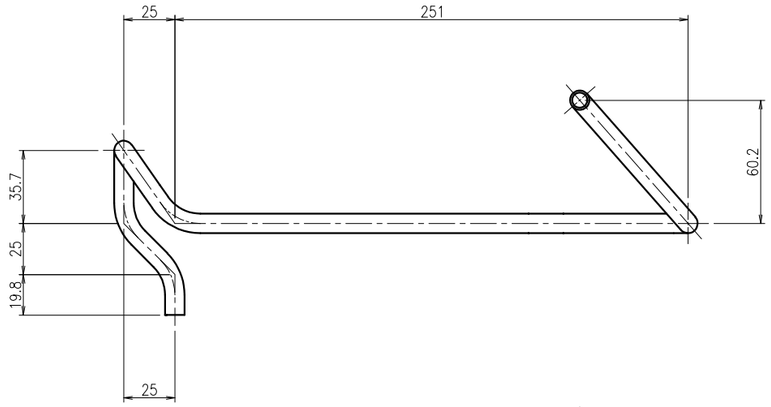

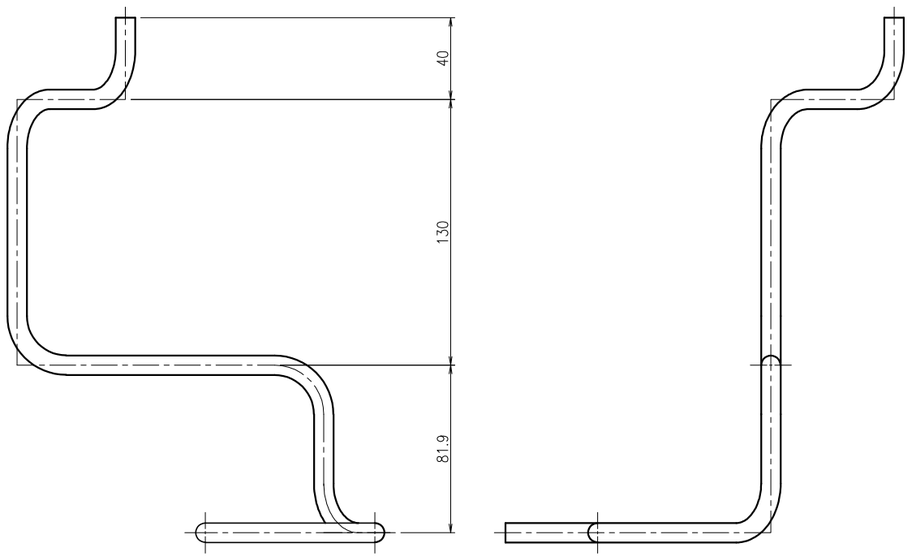

UEMM_SUPPLY_PIPING

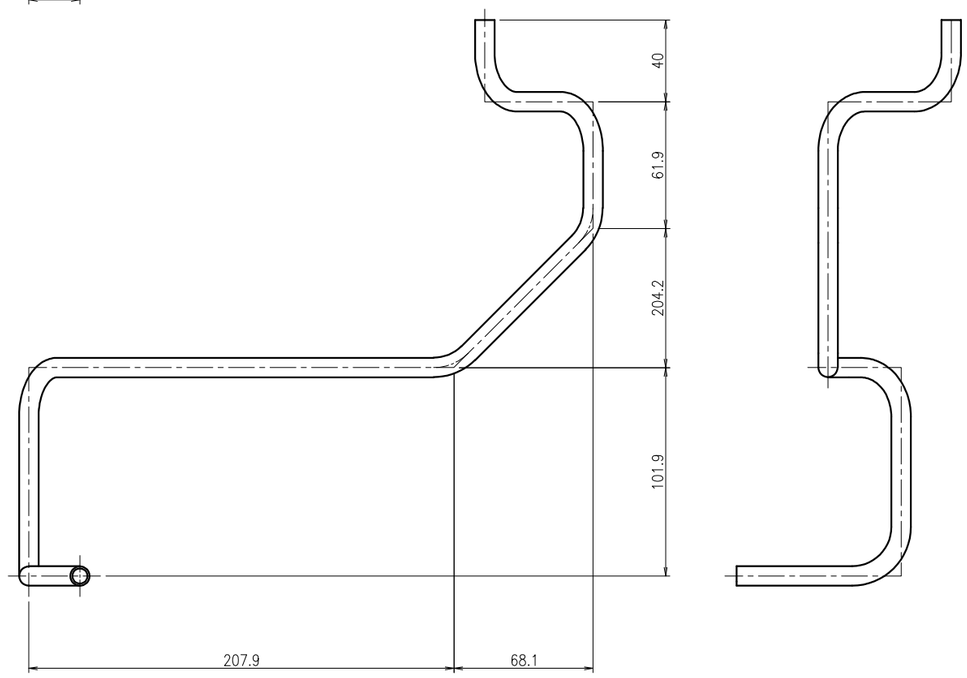

UEMM_RETURN_PIPING

REMARKS		APPROVED	REVIEWED	DRAWN	DATE 2021.11.30	PBS TITLE Diagnostics Poloidal Polarimeter		PROJECTION	SIZE A3
	QST National Institutes for Quantum and Radiological Science and Technology				SCALE 1 : 3	DRAWING TITLE UEMM_SUPPLY/RETURN_PIPING	DRAWING NO. JADA-55342DW0100	SHEET NO. U-40	REVISION 0

Name	Material	Quantity	Remarks
UEMM_CONNECTING_ROD_INTER_PIPING	SS316LN-IG	1	

NOTE

1. This drawing shows the cooling water piping of the first mirror of the UEMM.
2. The diameter of the pipe is 9.53 mm and the thickness is 0.89 mm.
3. The bending radius of the pipe is about 24 mm.
4. After processing, perform degreasing cleaning.
5. These pipes will be welded after the brazing shown in sheet U-10 or U-11 is completed and after the mirror assemblies are bolted to M1 or M2 base plates. The pipe dimension should be adjusted to the assembled mirror assemblies and base plates.

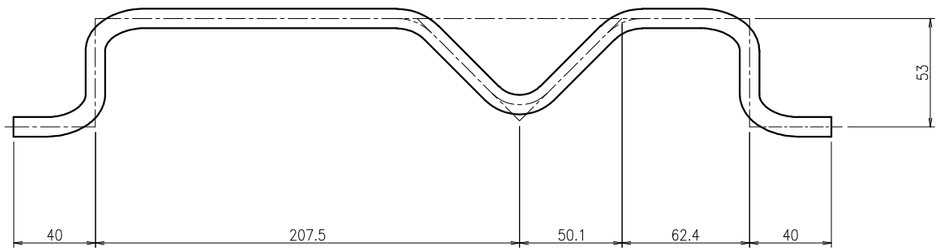

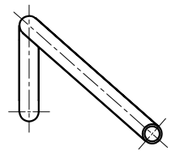

UEMM_CONNECTING_ROD_INTER_PIPING

REMARKS		APPROVED	REVIEWED	DRAWN	DATE 2021.11.30	PBS TITLE Diagnostics Poloidal Polarimeter		PROJECTION	SIZE A3
	QST National Institutes for Quantum and Radiological Science and Technology				SCALE 1 : 3	DRAWING TITLE UEMM_CONNECTING_ROD_INTER_PIPING	DRAWING NO. JADA-55342DW0100	SHEET NO. U-41	REVISION 0

NOTE

1. This drawing shows the assembly drawing of the connecting rod type 1 of the UEMM.
2. Welding of pipes requires full penetration welding.
3. The marked (*) dimensions are to be finished by machining the end face of the connecting base after welding.

No.	Name	Material	Quantity	Remarks
1	CONNECTING_PIPE_TYPE_1	SS316LN-IG	1	SHEET NO.U-45
2	CONNECTING_BASE_TYPE_2	SS316LN-IG	1	SHEET NO.U-47
3	CONNECTING_BASE_TYPE_3	SS316LN-IG	1	SHEET NO.U-47
4	NOZZLE_3/8INCH	SS316LN-IG	2	SHEET NO.U-48
5	THREADED_BOSS	SS316LN-IG	2	SHEET NO.U-48

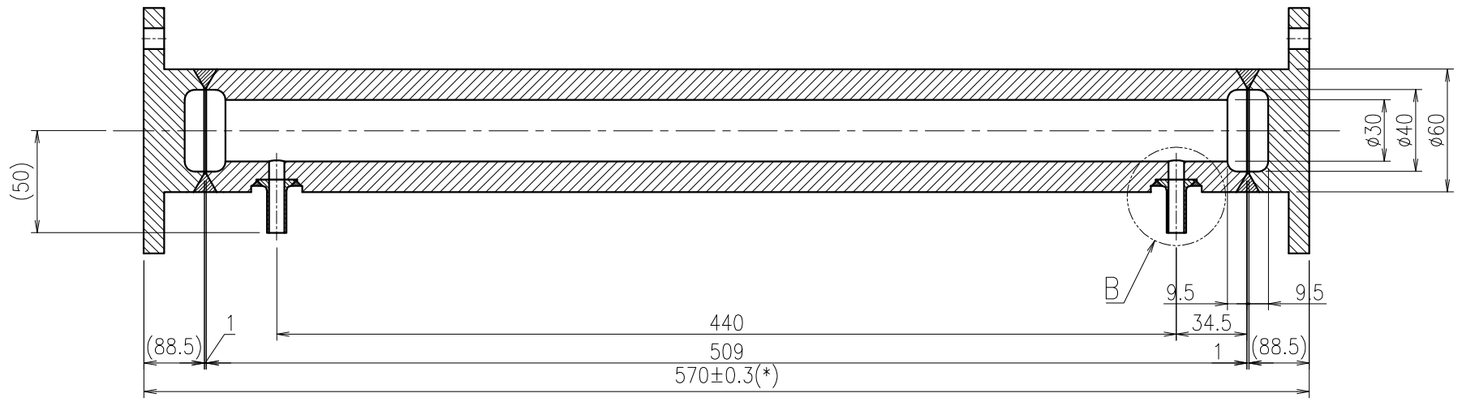

Sectional view A–A

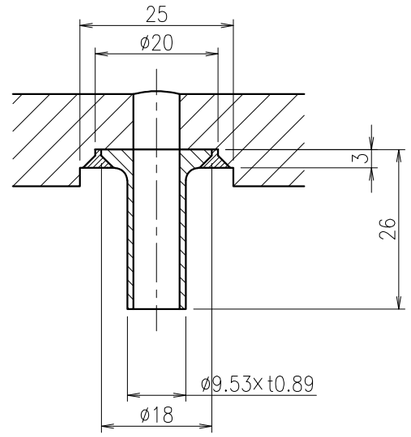

Detail B

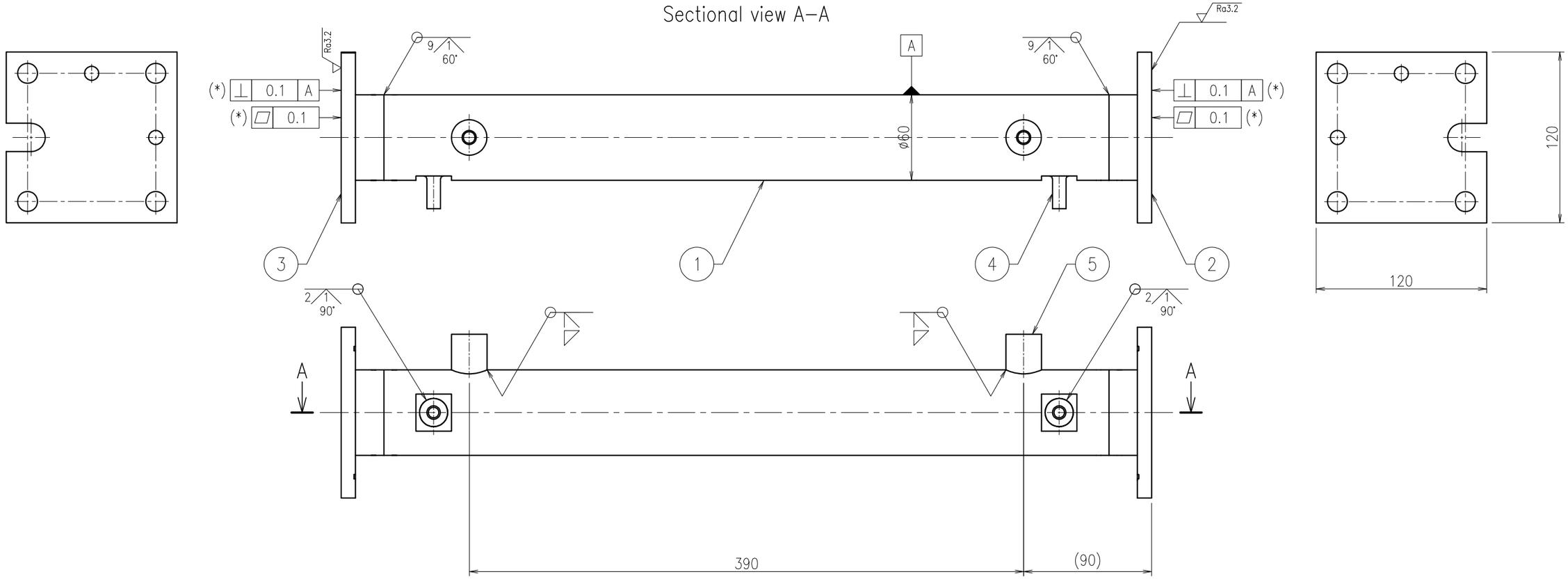

REMARKS		APPROVED	REVIEWED	DRAWN	DATE 2021.11.30	PBS TITLE Diagnostics Poloidal Polarimeter		PROJECTION	SIZE A3
	QST National Institutes for Quantum and Radiological Science and Technology				SCALE 1 : 3	DRAWING TITLE CONNECTING_ROD_TYPE_01_ASSEMBLY	DRAWING NO. JADA-55342DW0100	SHEET NO. U-42	REVISION 0

NOTE

1. This drawing shows the assembly drawing of the connecting rod type 2 of the UEMM.
2. Welding of pipes requires full penetration welding.
3. The marked (*) dimensions are to be finished by machining the end face of the connecting base after welding.

No.	Name	Material	Quantity	Remarks
1	CONNECTING_PIPE_TYPE_1	SS316LN-IG	1	SHEET NO.U-45
2	CONNECTING_BASE_TYPE_2	SS316LN-IG	1	SHEET NO.U-47
3	CONNECTING_BASE_TYPE_4	SS316LN-IG	1	SHEET NO.U-47
4	NOZZLE_3/8INCH	SS316LN-IG	2	SHEET NO.U-48
5	THREADED_BOSS	SS316LN-IG	2	SHEET NO.U-48

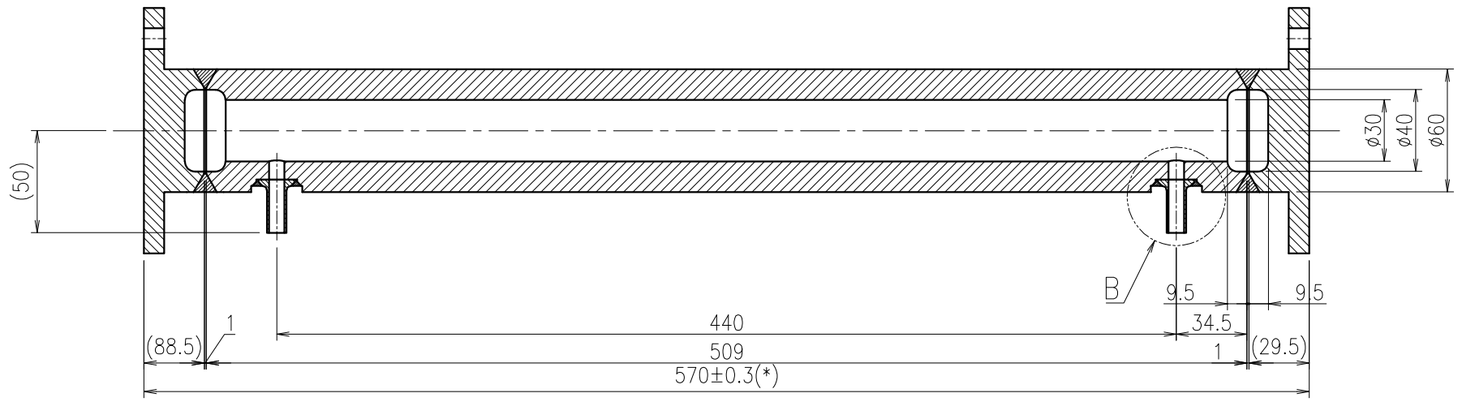

Sectional view A–A

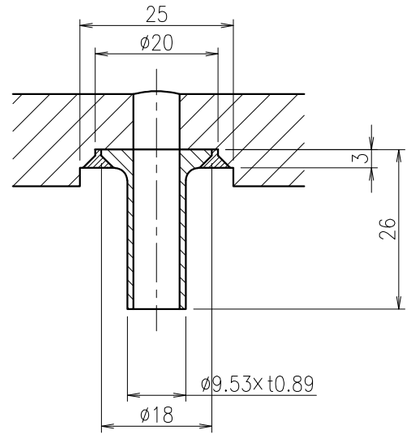

Detail B

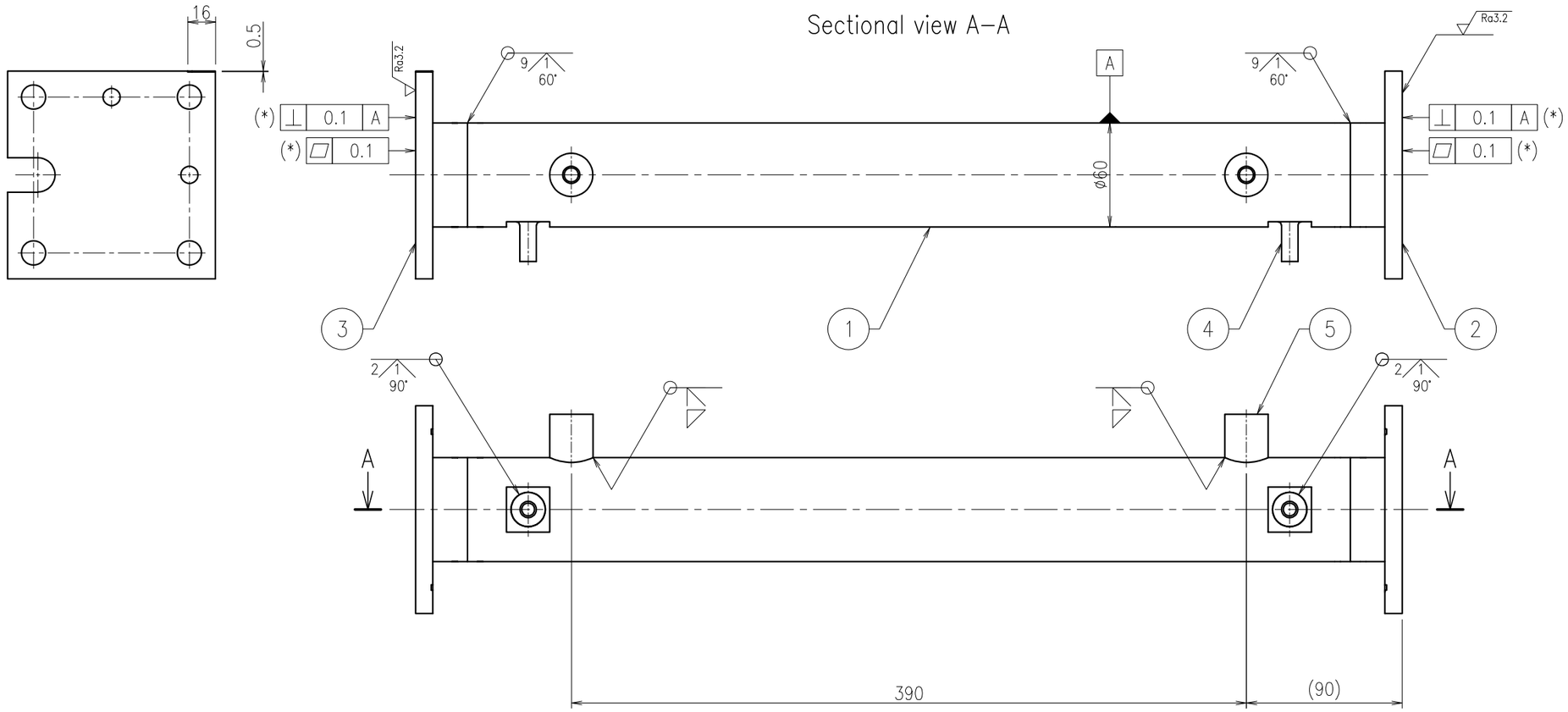

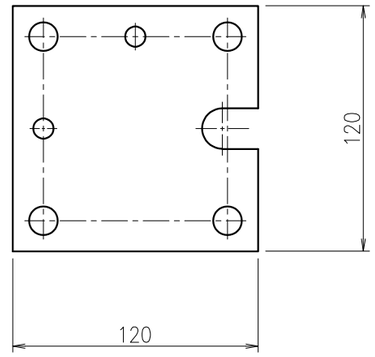

REMARKS		APPROVED	REVIEWED	DRAWN	DATE 2021.11.30	PBS TITLE Diagnostics Poloidal Polarimeter		PROJECTION	SIZE A3
	QST National Institutes for Quantum and Radiological Science and Technology				SCALE 1 : 3	DRAWING TITLE CONNECTING_ROD_TYPE_02_ASSEMBLY	DRAWING NO. JADA-55342DW0100	SHEET NO. U-43	REVISION 0

No.	Name	Material	Quantity	Remarks
1	CONNECTING_PIPE_TYPE_2	SS316LN-IG	1×2	SHEET NO.U-46
2	CONNECTING_BASE_TYPE_1	SS316LN-IG	2×2	SHEET NO.U-47
3	NOZZLE_3/8INCH	SS316LN-IG	2×2	SHEET NO.U-48
4	THREADED_BOSS	SS316LN-IG	2×2	SHEET NO.U-48

NOTE

1. This drawing shows the assembly drawing of the connecting rod type 3 of the UEMM.
2. Welding of pipes requires full penetration welding.
3. The marked (*) dimensions are to be finished by machining the end face of the connecting base after welding.

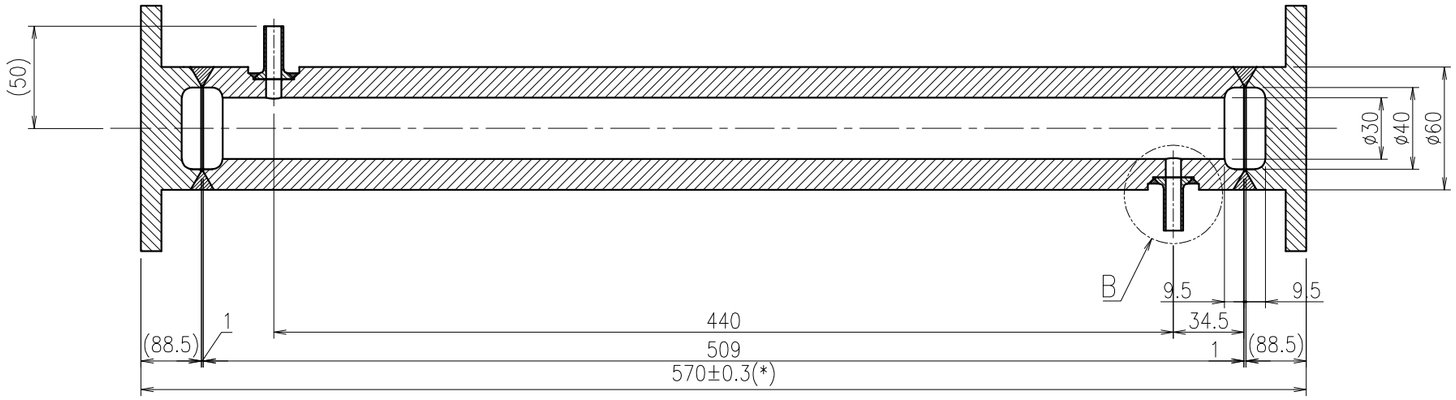

Sectional view A–A

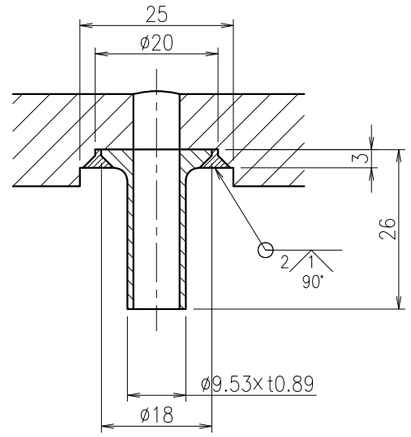

Detail B

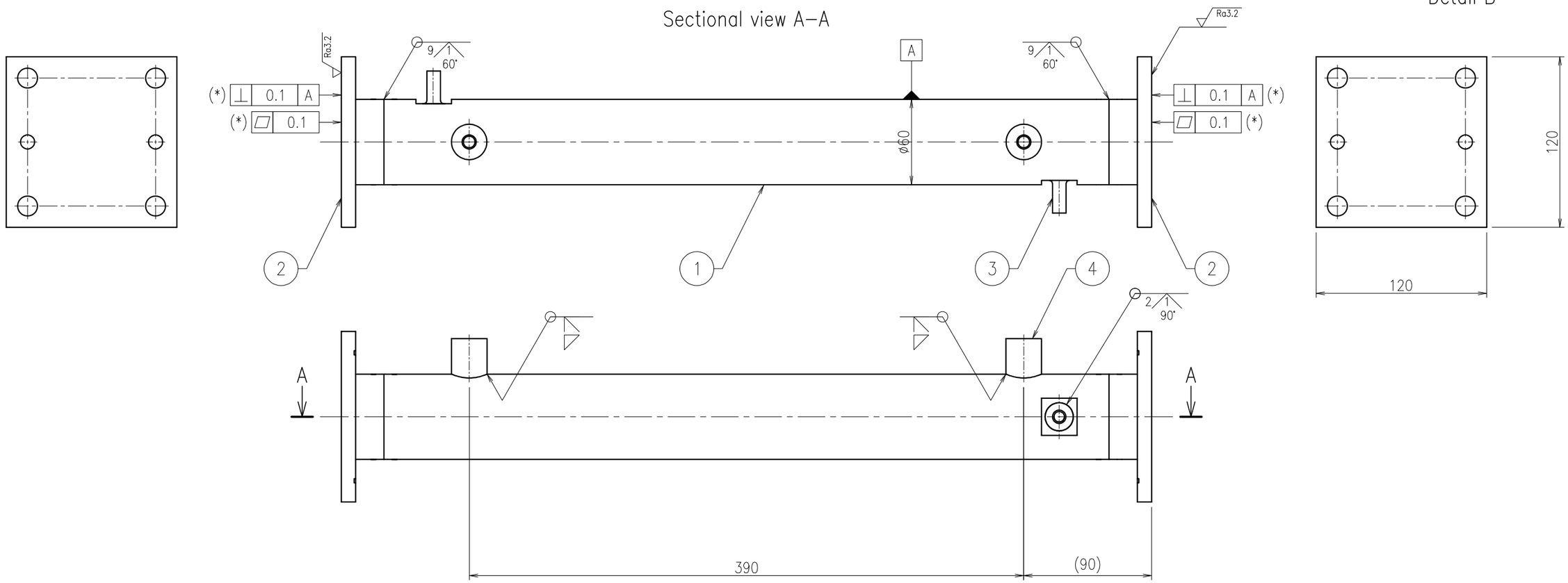

REMARKS		APPROVED	REVIEWED	DRAWN	DATE 2021.11.30	PBS TITLE Diagnostics Poloidal Polarimeter		PROJECTION	SIZE A3
	QST National Institutes for Quantum and Radiological Science and Technology				SCALE 1 : 3	DRAWING TITLE CONNECTING_ROD_TYPE_03_ASSEMBLY	DRAWING NO. JADA-55342DW0100	SHEET NO. U-44	REVISION 0

Name	Material	Quantity	Remarks
CONNECTING_PIPE_TYPE_1	SS316LN-IG	2	

General Tolerance : ISO 2768 m-K
Surface roughness not indicated : Ra6.3

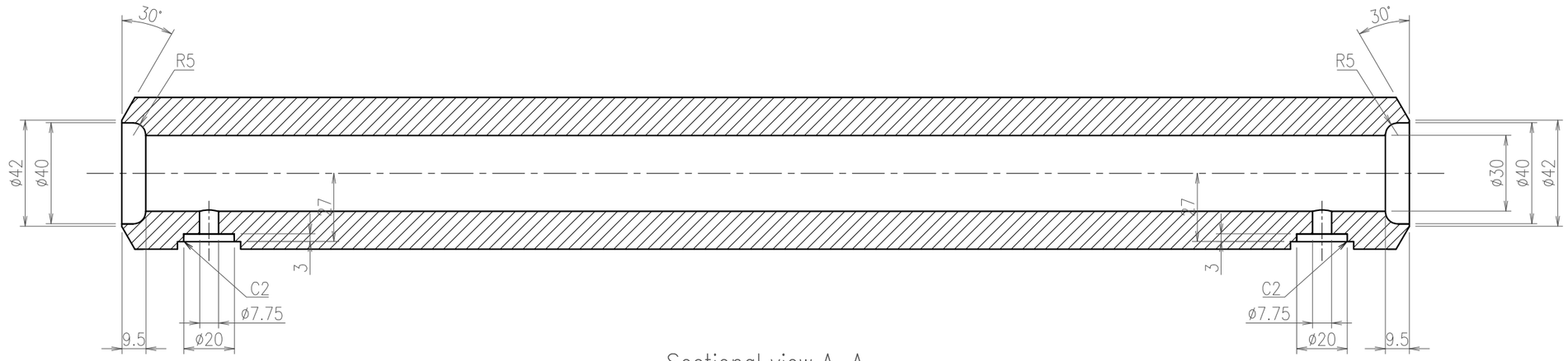

Sectional view A-A

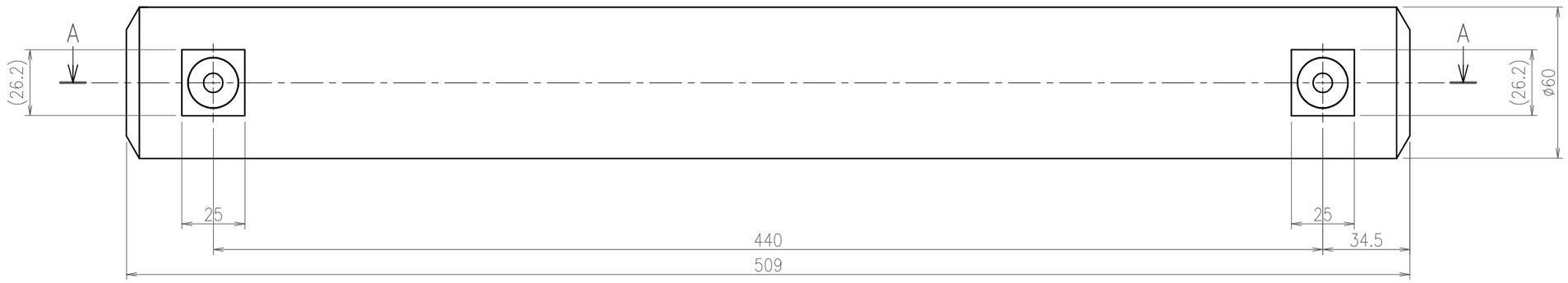

NOTE
1. This drawing shows the pipe of the connecting rod of the UEMM.
2. The ridges and corners should be chamfered(about C0.2), and there should be no burrs.
3. After processing, perform degreasing cleaning.

REMARKS		APPROVED	REVIEWED	DRAWN	DATE 2021.11.30	PBS TITLE Diagnostics Poloidal Polarimeter		PROJECTION	SIZE A3
	QST National Institutes for Quantum and Radiological Science and Technology				SCALE 1 : 2	DRAWING TITLE CONNECTING_PIPE_TYPE_1	DRAWING NO. JADA-55342DW0100	SHEET NO. U-45	REVISION 0

Name	Material	Quantity	Remarks
CONNECTING_PIPE_TYPE_2	SS316LN-IG	2	

General Tolerance : ISO 2768 m-K
Surface roughness not indicated : Ra6.3

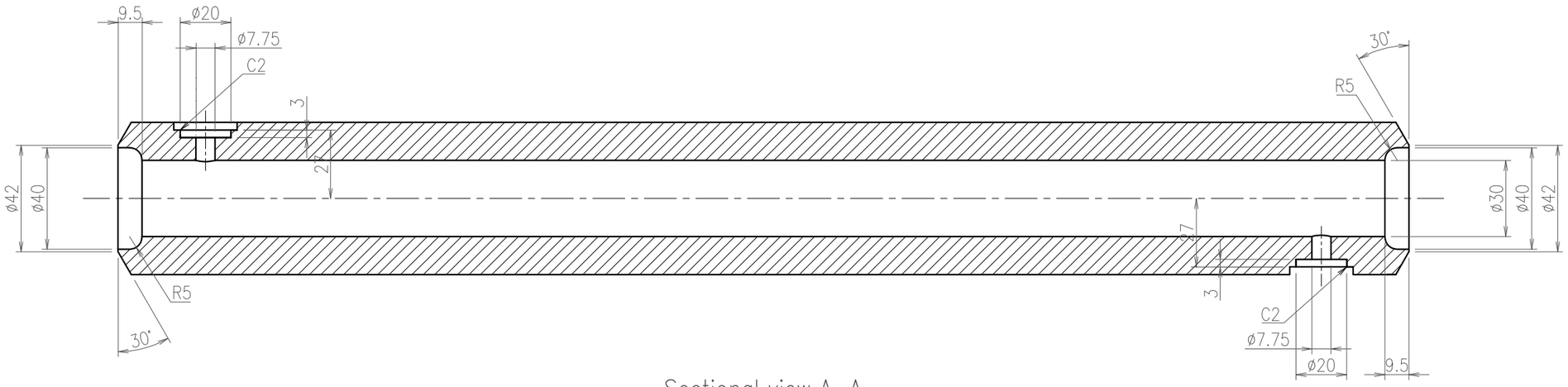

Sectional view A–A

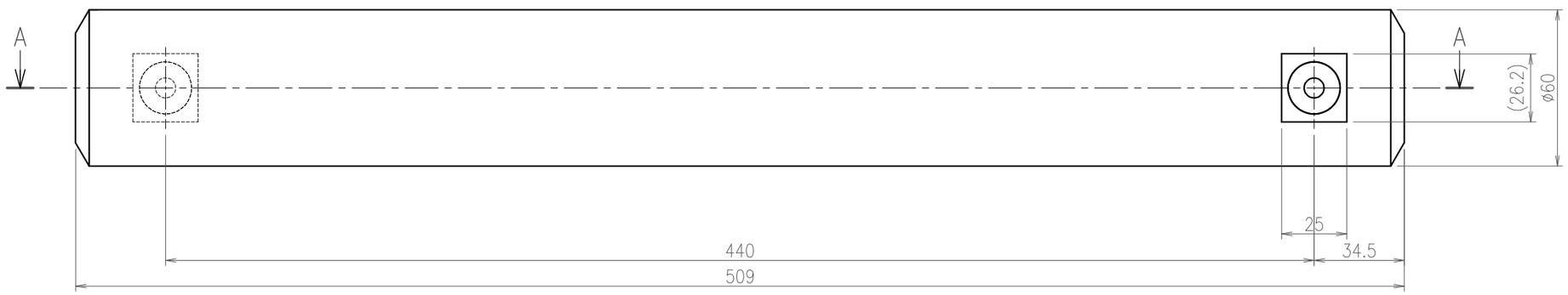

NOTE
1. This drawing shows the pipe of the connecting rod of the UEMM.
2. The ridges and corners should be chamfered(about C0.2), and there should be no burrs.
3. After processing, perform degreasing cleaning.

REMARKS		APPROVED	REVIEWED	DRAWN	DATE 2021.11.30	PBS TITLE Diagnostics Poloidal Polarimeter		PROJECTION	SIZE A3
	QST National Institutes for Quantum and Radiological Science and Technology				SCALE 1 : 2	DRAWING TITLE CONNECTING_PIPE_TYPE_2	DRAWING NO. JADA-55342DW0100	SHEET NO. U-46	REVISION 0

General Tolerance : ISO 2768 m-K
Surface roughness not indicated : Ra6.3

NOTE
1. This drawing shows the base of the connecting rod of the UEMM.
2. The ridges and corners should be chamfered(about C0.2), and there should be no burrs.
3. After processing, perform degreasing cleaning.

Name	Material	Quantity	Remarks
CONNECTING_BASE_TYPE_1	SS316LN-IG	4	
CONNECTING_BASE_TYPE_2	SS316LN-IG	2	
CONNECTING_BASE_TYPE_3	SS316LN-IG	1	
CONNECTING_BASE_TYPE_4	SS316LN-IG	1	

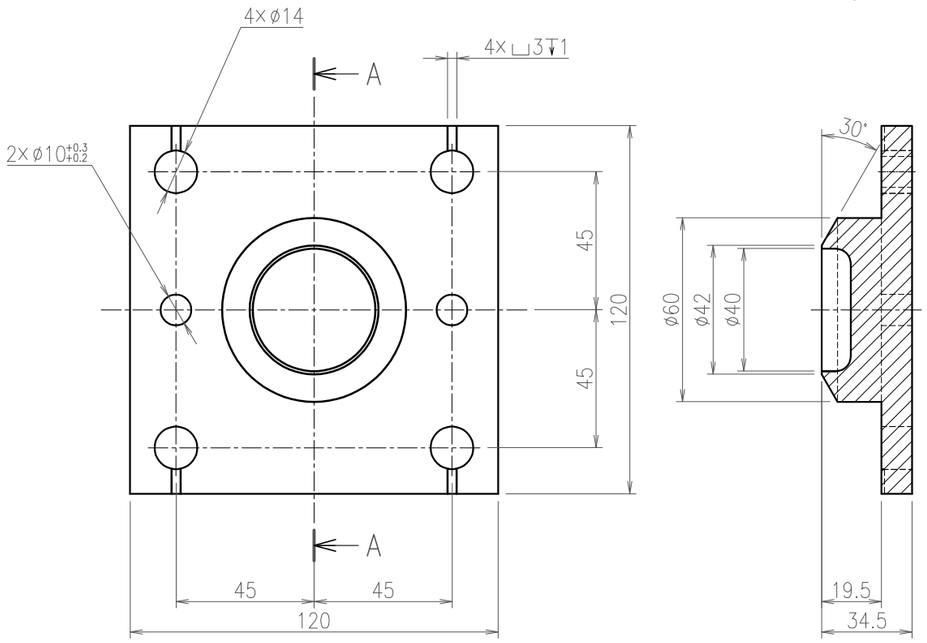

Sectional view A–A

CONNECTING_BASE_TYPE_1

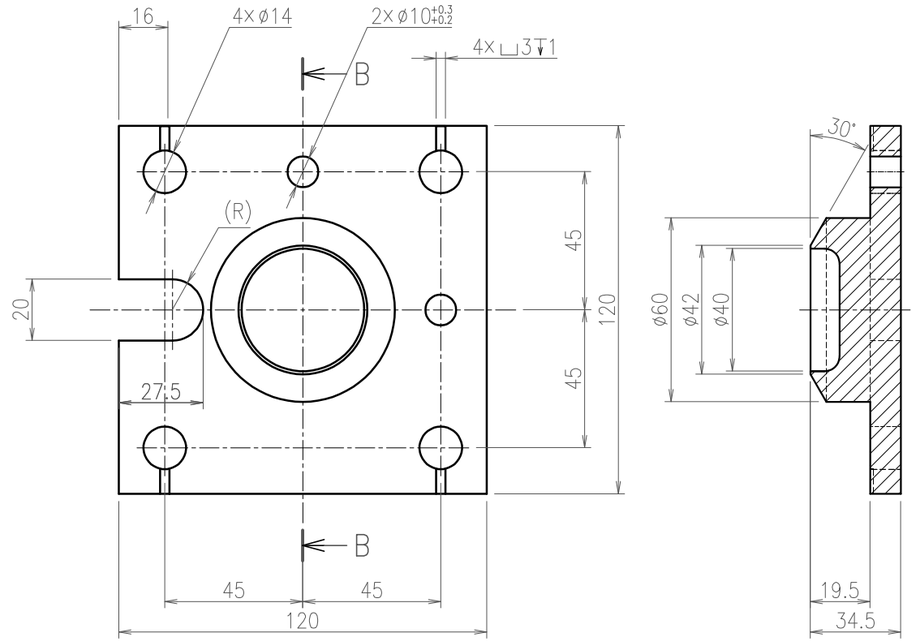

Sectional view B–B

CONNECTING_BASE_TYPE_2

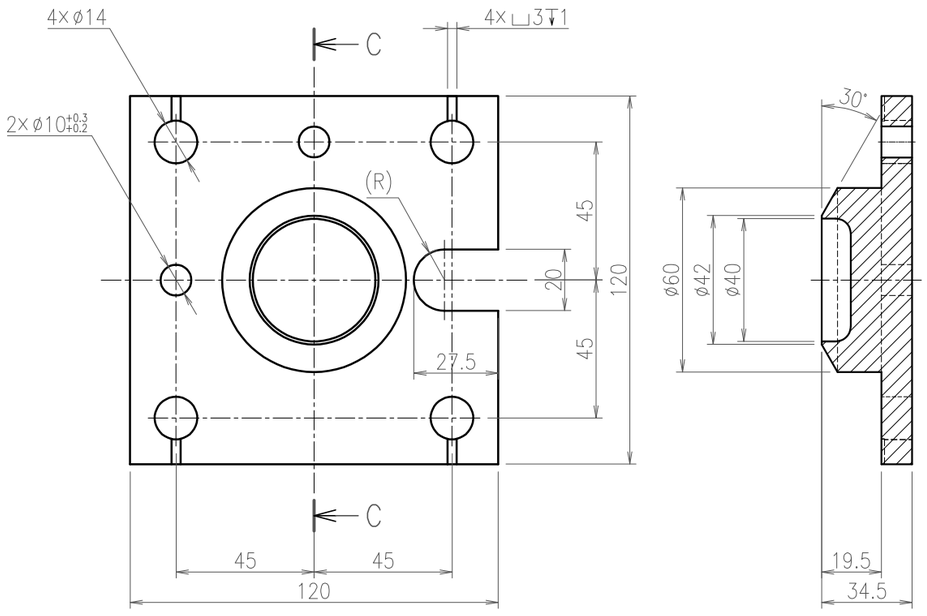

Sectional view C–C

CONNECTING_BASE_TYPE_3

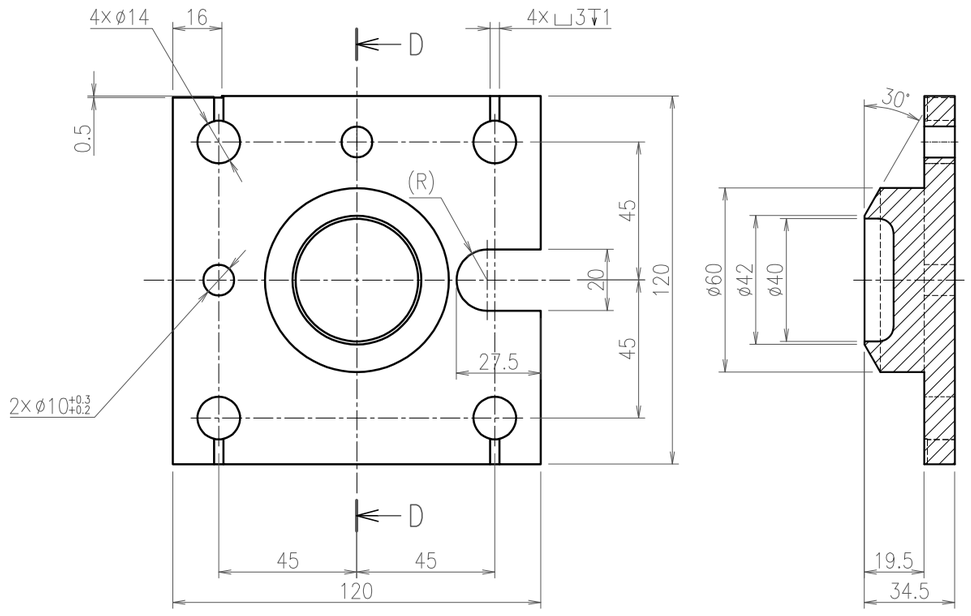

Sectional view D–D

CONNECTING_BASE_TYPE_4

REMARKS		APPROVED	REVIEWED	DRAWN	DATE 2021.11.30	PBS TITLE Diagnostics Poloidal Polarimeter	PROJECTION	SIZE A3
	QST National Institutes for Quantum and Radiological Science and Technology				SCALE 1 : 2	DRAWING TITLE CONNECTING_BASE	DRAWING NO. JADA-55342DW0100	SHEET NO. U-47 / REVISION 0

General Tolerance : ISO 2768 m-K
Surface roughness not indicated : Ra6.3

Name	Material	Quantity	Remarks
NOZZLE_3/8INCH	SS316LN-IG	8	
THREADEDE_BOSS	SS316LN-IG	8	

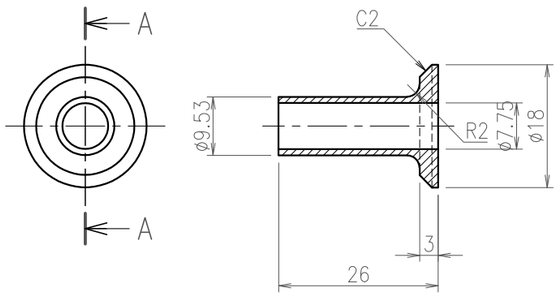

Sectional view A-A

NOZZLE_3/8INCH

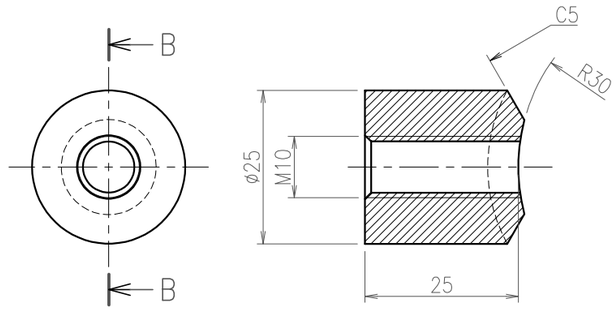

Sectional view B-B

THREADED_BOSS

NOTE
1. This drawing shows the parts of the connecting rod of the UEMM.
2. The ridges and corners should be chamfered(about C0.2), and there should be no burrs.
3. After processing, perform degreasing cleaning.

REMARKS		APPROVED	REVIEWED	DRAWN	DATE 2021.11.30	PBS TITLE Diagnostics Poloidal Polarimeter	PROJECTION	SIZE A3
	QST National Institutes for Quantum and Radiological Science and Technology				SCALE 1 : 1	DRAWING TITLE CONNECTING_ROD_COMPONENT_PARTS	DRAWING NO. JADA-55342DW0100 / SHEET NO. U-48	REVISION 0

General Tolerance : ISO 2768 m-K
Surface roughness not indicated : Ra6.3

Name	Material	Quantity	Remarks
TAB_WASHER_M12	SS316LN-IG	62	
TAB_WASHER_M6	SS316LN-IG	6	
SPECIAL_WASHER_M12	SS316LN-IG	30	
SQUARE_WASHER	SS316LN-IG	80	
REDUCER_TYPE_1	SS316LN-IG	2	
REDUCER_TYPE_2	SS316LN-IG	4	

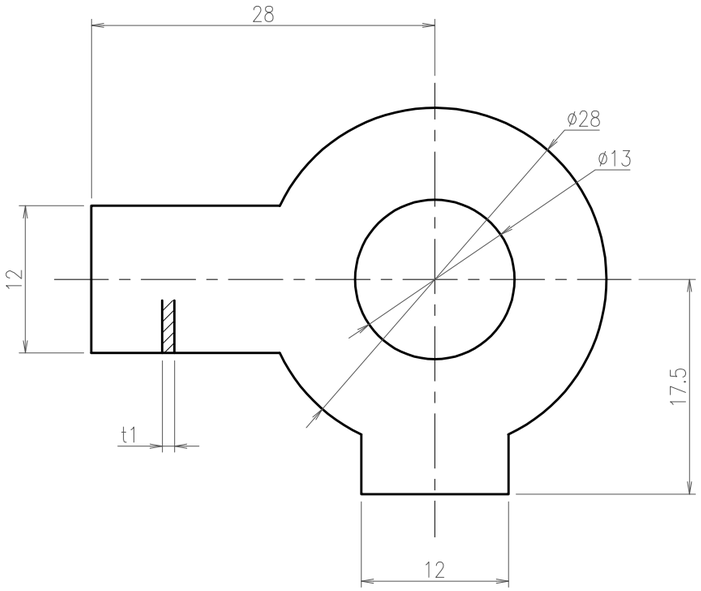

TAB_WASHER_M12

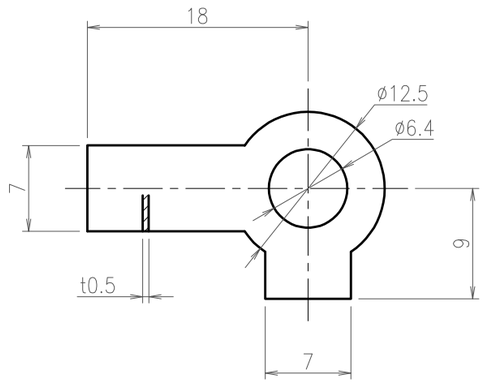

TAB_WASHER_M6

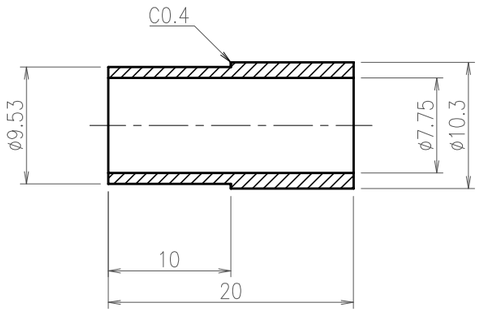

REDUCER_TYPE_1

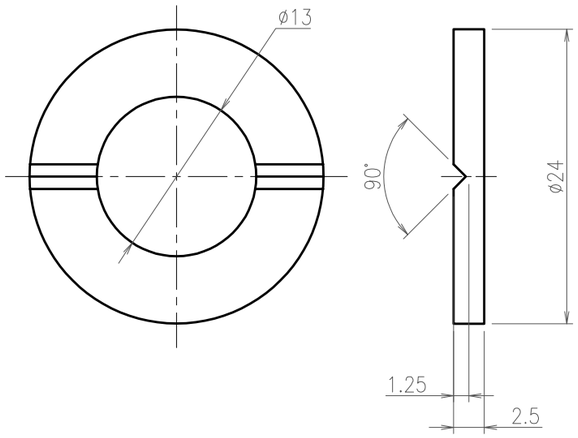

SPECIAL_WASHER_M12

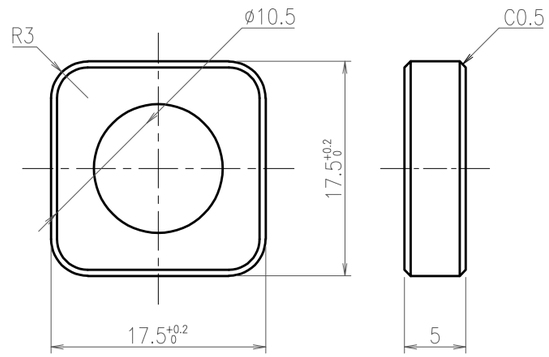

SQUARE_WASHER

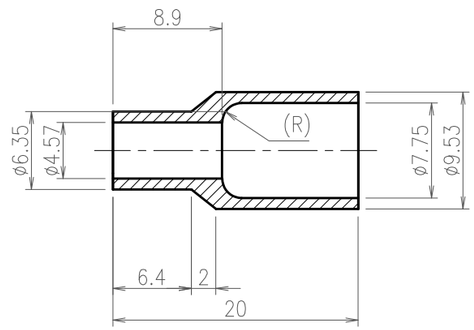

REDUCER_TYPE_2

NOTE
1. The ridges and corners should be chamfered(about C0.2), and there should be no burrs.
2. After processing, perform degreasing cleaning.

REMARKS		APPROVED	REVIEWED	DRAWN	DATE 2021.11.30	PBS TITLE Diagnostics Poloidal Polarimeter	PROJECTION	SIZE A3
	QST National Institutes for Quantum and Radiological Science and Technology				SCALE 2 : 1	DRAWING TITLE UEMM_SPECIAL_ACCESSORIES	DRAWING NO. JADA-55342DW0100	SHEET NO. U-49 / REVISION 0

Name	Material	Quantity	Remarks
UEMM_SUPPLY_EXTENSION_PIPING	SS316LN-IG	1	
UEMM_RETURN_EXTENSION_PIPING	SS316LN-IG	1	

NOTE

1. This drawing shows the extension piping of the cooling water supply piping and return piping of the UEMM.
2. The diameter of the pipe is 10.3 mm and the thickness is 1.24 mm.
3. The bending radius of the pipe is about 35 mm.
4. After processing, perform degreasing cleaning.

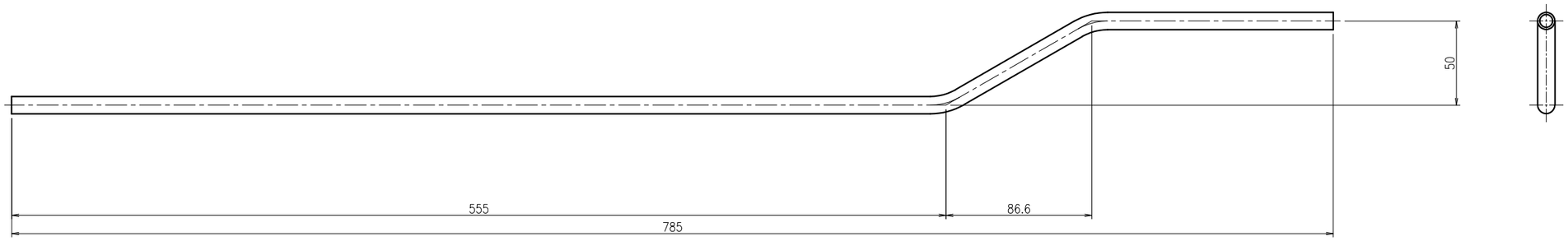

UEMM_SUPPLY_EXTENSION_PIPING

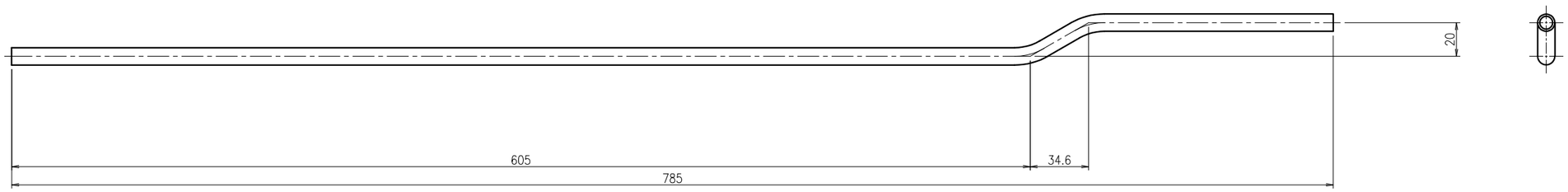

UEMM_RETURN_EXTENSION_PIPING

REMARKS		APPROVED	REVIEWED	DRAWN	DATE 2021.11.30	PBS TITLE Diagnostics Poloidal Polarimeter		PROJECTION	SIZE A3
	QST National Institutes for Quantum and Radiological Science and Technology				SCALE 1 : 3	DRAWING TITLE UEMM_SUPPLY/RETURN_EXTENSION_PIPING	DRAWING NO. JADA-55342DW0100	SHEET NO. U-50	REVISION 0

General Tolerance : ISO 2768 m-K
Surface roughness not indicated : Ra6.3

NOTE
1. This drawing shows the assembly drawing of the parts before processing by the hot isostatic pressing method.
2. The ridges and corners should be chamfered(about C0.2), and there should be no burrs.
3. After processing, perform degreasing cleaning.

No.	Name	Material	Quantity	Remarks
1	HEAT_SINK	CuCrZr	1	
2	SUPPORT_A	SS316LN-IG	1	
3	SUPPORT_B	SS316LN-IG	1	
4	COOLING_PIPE	SS316LN-IG	1	

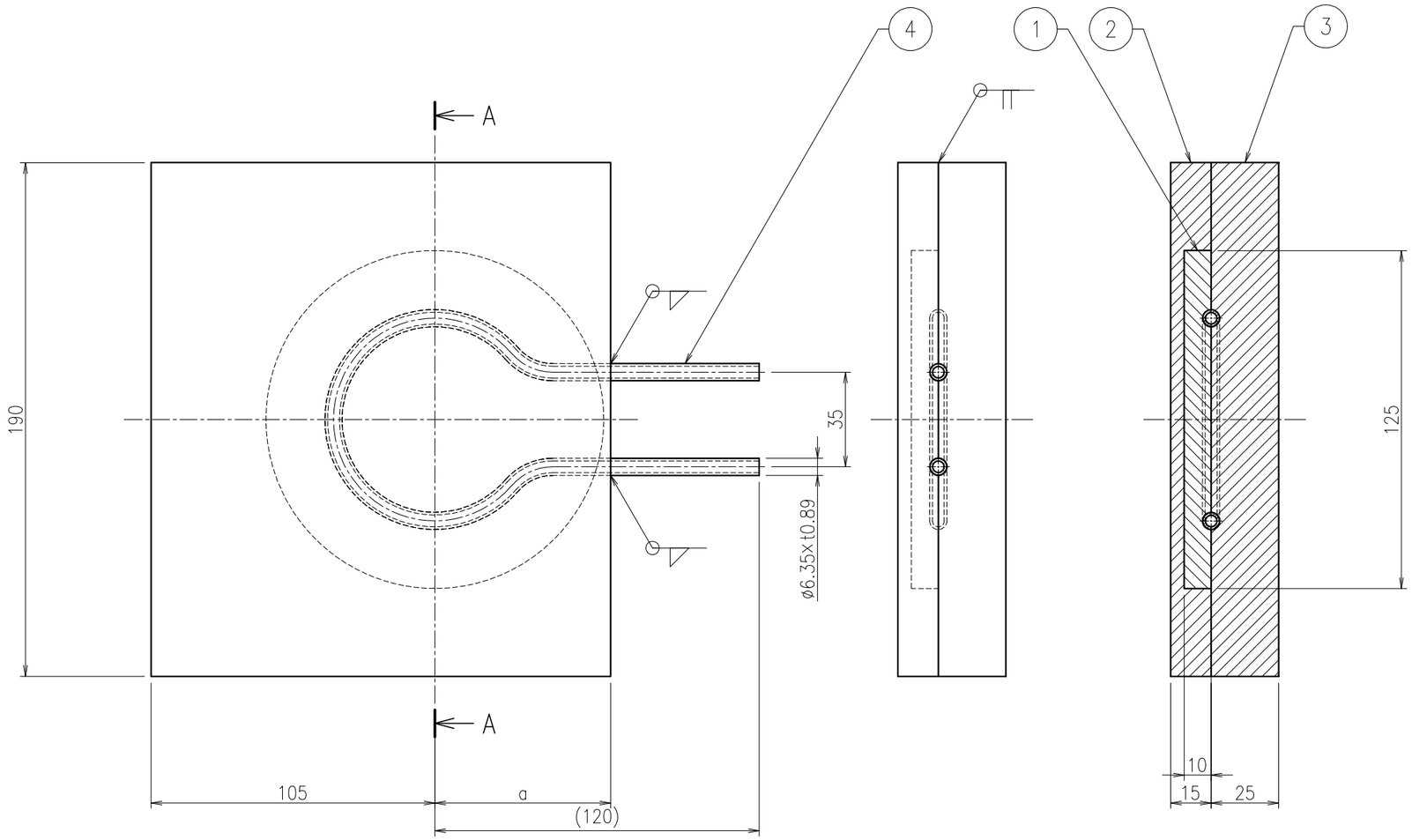

Sectional view A-A

Number of production

Type	Dimension a	Mirror number	Number of production
1	65	M1E1、M1E6、M1E7、M1E8、M2E1、M2E6、M2E7、M2E8	8set
2	70	M1E5、M2E5	2set

REMARKS		APPROVED	REVIEWED	DRAWN	DATE 2021.11.30	PBS TITLE Diagnostics Poloidal Polarimeter		PROJECTION	SIZE A3
	QST National Institutes for Quantum and Radiological Science and Technology				SCALE 1 : 2	DRAWING TITLE UEMM_HIP_PROCESSING_ASSEMBLY	DRAWING NO. JADA-55342DW0100	SHEET NO. U-51	REVISION 0

IO APPROVED BY : VAYAKIS G. DATE : 18 MAR 2022 INTENDED USAGE : FOR TENDER

General Tolerance : ISO 2768 m-K
Surface roughness not indicated : Ra6.3

NOTE
1. This drawing shows the parts before processing by the hot isostatic pressing method.
2. The ridges and corners should be chamfered(about C0.2), and there should be no burrs.
3. After processing, perform degreasing cleaning.

No.	Name	Material	Quantity	Remarks
1	HEAT_SINK	CuCrZr	10	
2	SUPPORT_A	SS316LN-IG	See table	
3	SUPPORT_B	SS316LN-IG	See table	
4	COOLING_PIPE	SS316LN-IG	10	

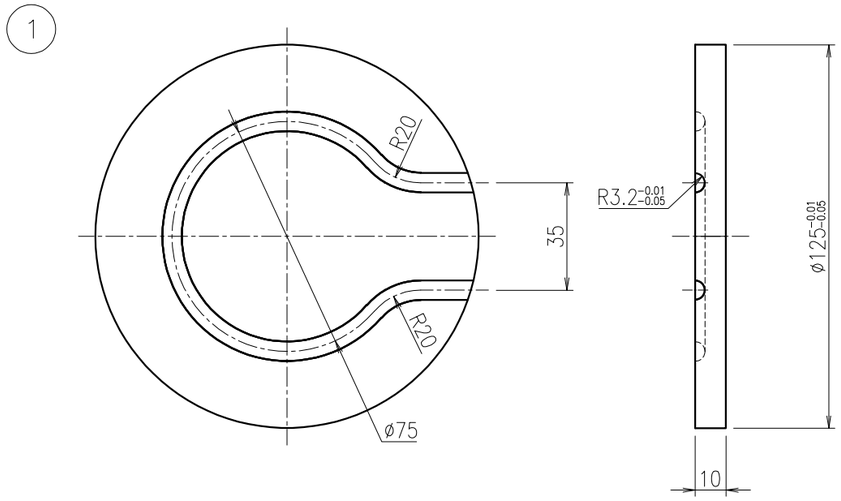

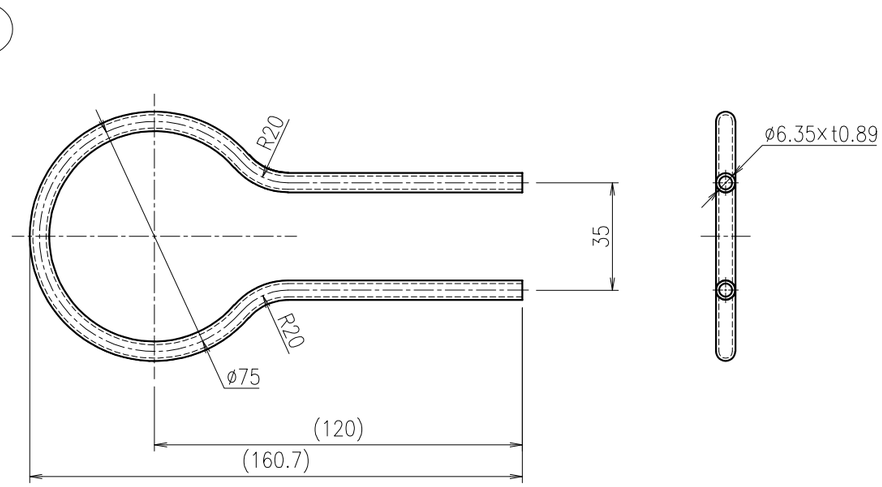

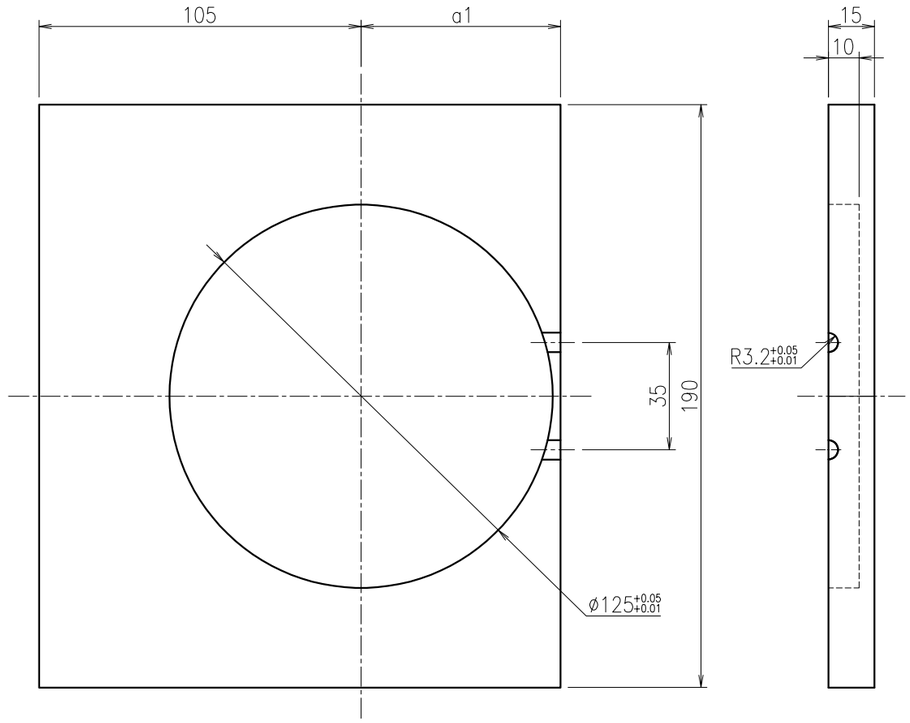

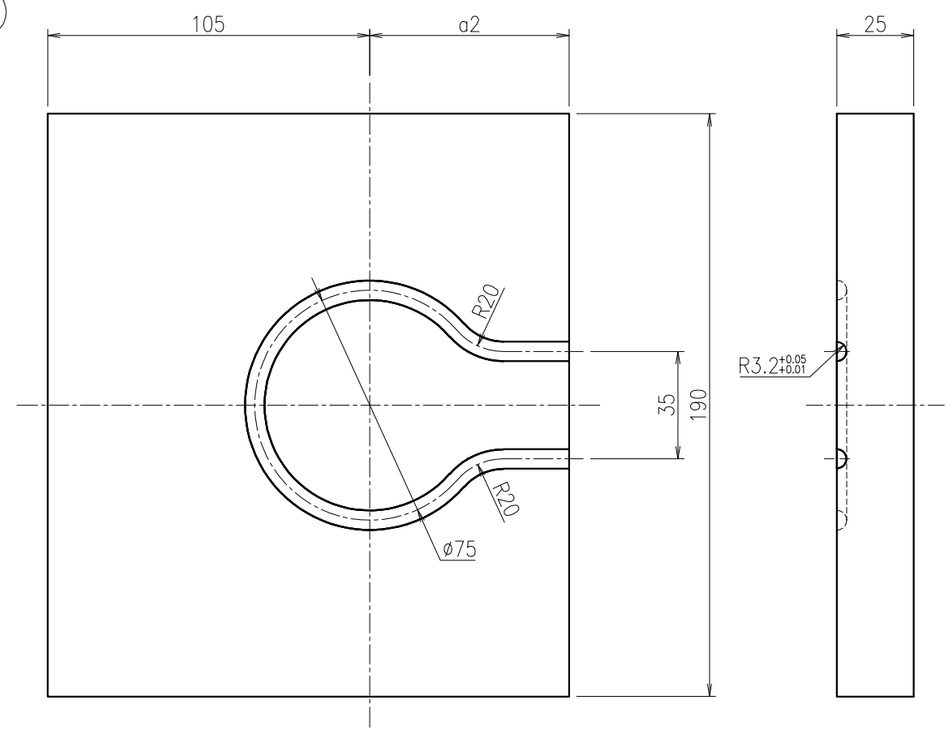

Dimension a1	Quantity
65	8
70	2
73	73
75	75

Dimension a2	Quantity
65	8
70	2
73	73
75	75

REMARKS		APPROVED	REVIEWED	DRAWN	DATE 2021.11.30	PBS TITLE Diagnostics Poloidal Polarimeter	PROJECTION	SIZE A3
	QST National Institutes for Quantum and Radiological Science and Technology				SCALE 1 : 2	DRAWING TITLE UEMM_HIP_PROCESSING_PARTS	DRAWING NO. JADA-55342DW0100	SHEET NO. U-52 / REVISION 0

NOTE

1. Protect the mirror surface during assembly.
2. Welding of pipes requires full penetration welding.

No.	Name	Material	Quantity	Remarks
1	UEMM_FIRST_MODULE_ASSEMBLY		1set	SHEET NO.L-02
2	UEMM_SECOND_MODULE_ASSEMBLY		1set	SHEET NO.L-03
3	CONNECTING_ROD_TYPE_4_ASSEMBLY	SS316LN-IG	1set	SHEET NO.L-38
4	CONNECTING_ROD_TYPE_5_ASSEMBLY	SS316LN-IG	1set	SHEET NO.L-39
5	CONNECTING_ROD_TYPE_6_ASSEMBLY	SS316LN-IG	2set	SHEET NO.L-40
6	POSITIONING_PIN	SS316LN-IG	16	Model number : AFPNHA8-P10-L10-B10(MISUMI)
7	HEXAGON_HEAD_BOLT	SS316LN-IG	32	M12×30
8	TAB_WASHER_M12	SS316LN-IG	32	SHEET NO.L-45

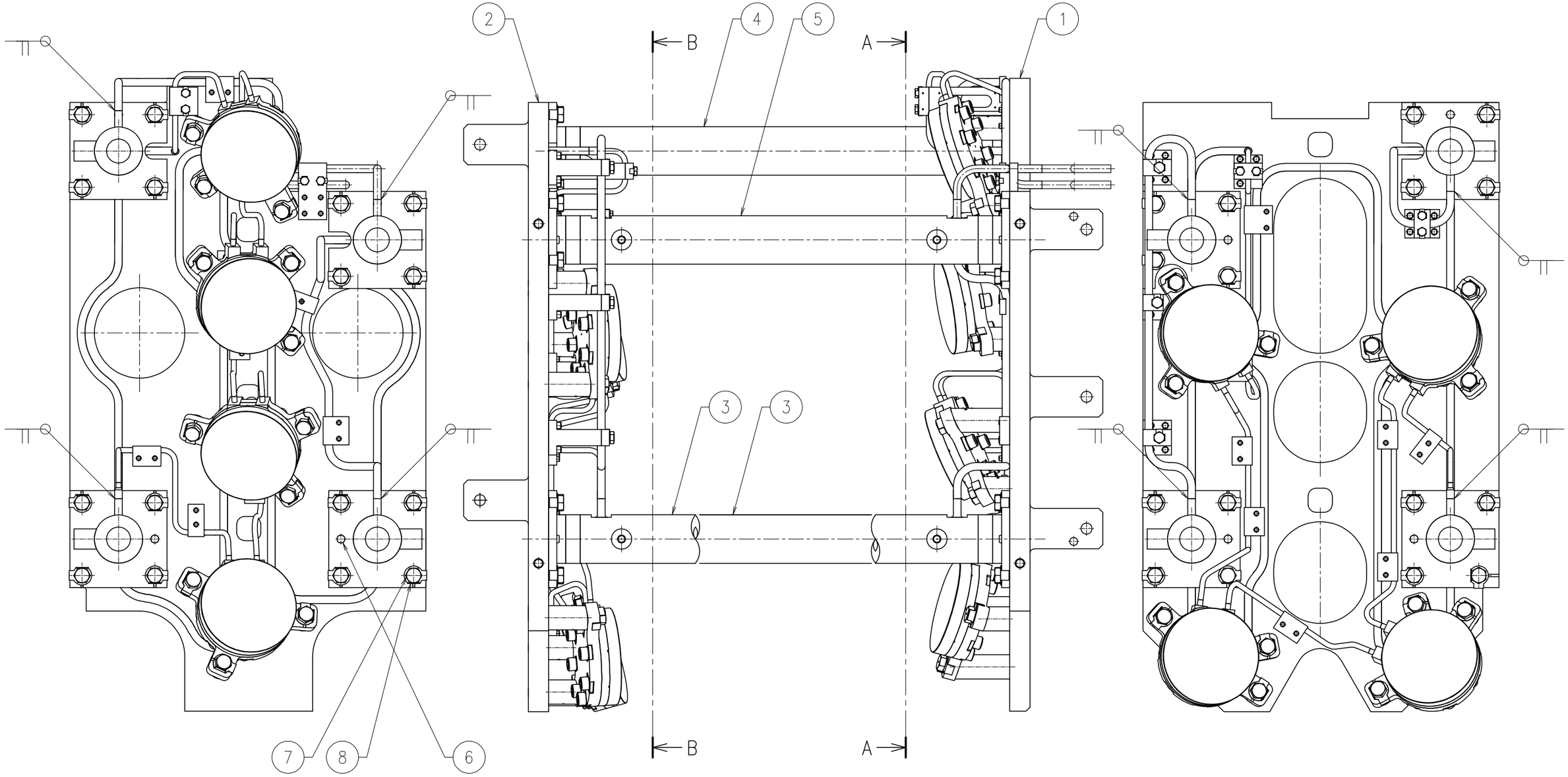

Sectional view A–A

Sectional view B–B

REMARKS		APPROVED	REVIEWED	DRAWN	DATE 2021.11.30	PBS TITLE Diagnostics Poloidal Polarimeter		PROJECTION	SIZE A3
	QST National Institutes for Quantum and Radiological Science and Technology				SCALE 1 : 5	DRAWING TITLE LEMM_ASSEMBLY	DRAWING NO. JADA-55342DW0100	SHEET NO. L-01	REVISION 0

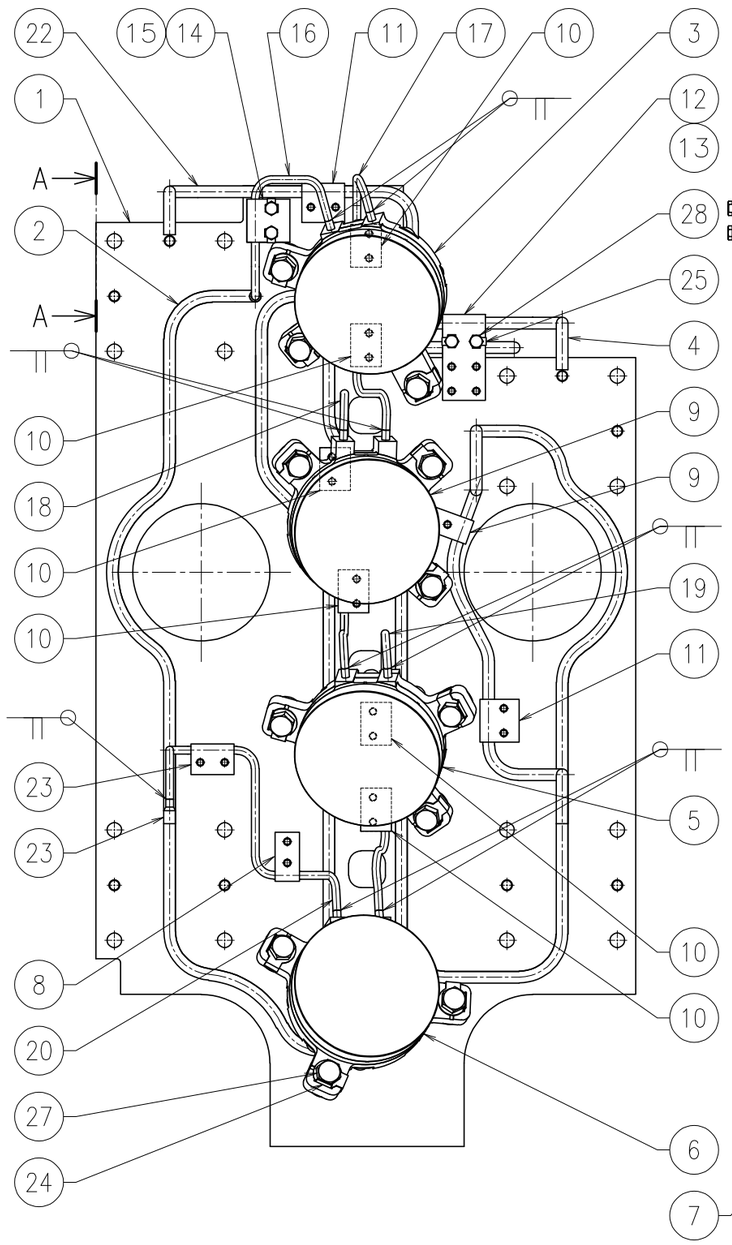

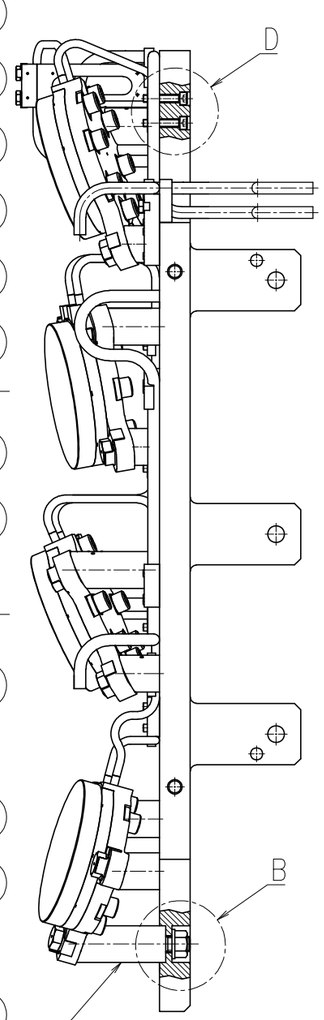

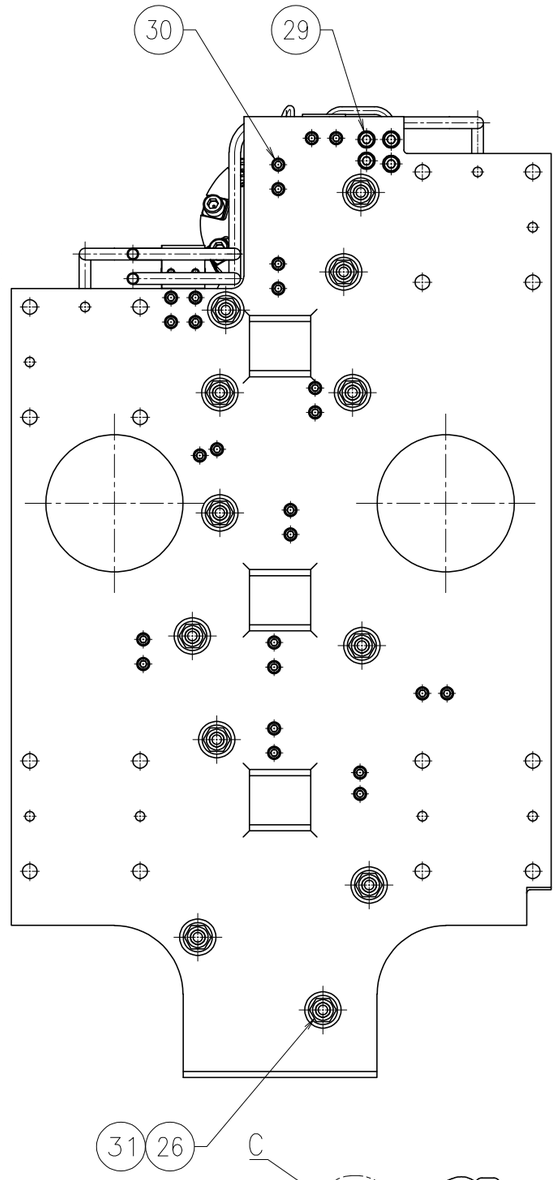

No.	Name	Material	Quantity	Remarks
1	LEMM_FIRST_BASE_PLATE	SS316LN-IG	1	SHEET NO.L-04、L-06
2	LEMM_FIRST_BASE_PIPING	SS316LN-IG	1set	SHEET NO.L-08
3	MIRROR_ASSEMBLY(M1E2)		1set	SHEET NO.L-12
4	MIRROR_ASSEMBLY(M1E3)		1set	SHEET NO.L-13
5	MIRROR_ASSEMBLY(M1E4)		1set	SHEET NO.L-14
6	MIRROR_ASSEMBLY(M1E9)		1set	SHEET NO.L-15
7	UEMM_MIRROR_ROD	SS316LN-IG	12	SHEET NO.L-29
8	PIPING_SUPPORT_TYPE_1	SS316LN-IG	9	SHEET NO.L-30
9	PIPING_SUPPORT_TYPE_3	SS316LN-IG	1	SHEET NO.L-30
10	PIPING_SUPPORT_TYPE_6	SS316LN-IG	1	SHEET NO.L-30
11	PIPING_SUPPORT_TYPE_7	SS316LN-IG	1	SHEET NO.L-30
12	PIPING_SUPPORT_TYPE_16	SS316LN-IG	1	SHEET NO.L-30
13	PIPING_SUPPORT_TYPE_17	SS316LN-IG	1	SHEET NO.L-30
14	PIPING_SUPPORT_PILLAR_TYPE_3	SS316LN-IG	1	SHEET NO.L-31
15	PIPING_SUPPORT_COVER_TYPE_3	SS316LN-IG	1	SHEET NO.L-33
16	LOWER_FIRST_MIRROR_PIPING_TYPE_1	SS316LN-IG	1	SHEET NO.L-34
17	LOWER_FIRST_MIRROR_PIPING_TYPE_2	SS316LN-IG	1	SHEET NO.L-34
18	LOWER_FIRST_MIRROR_PIPING_TYPE_3	SS316LN-IG	1	SHEET NO.L-34
19	LOWER_FIRST_MIRROR_PIPING_TYPE_4	SS316LN-IG	1	SHEET NO.L-34
20	LOWER_FIRST_MIRROR_PIPING_TYPE_5	SS316LN-IG	1	SHEET NO.L-34
21	LOWER_MODULE_SUPPLY_PIPING	SS316LN-IG	1	SHEET NO.L-36
22	LOWER_MODULE_RETURN_PIPING	SS316LN-IG	1	SHEET NO.L-36
23	REDUCER_TYPE_2	SS316LN-IG	2	SHEET NO.L-45
24	TAB_WASHER_M12	SS316LN-IG	12	SHEET NO.L-45
25	TAB_WASHER_M6	SS316LN-IG	2	SHEET NO.L-45
26	SPECIAL_WASHER_M12	SS316LN-IG	12	SHEET NO.L-45
27	HEXAGON_HEAD_BOLT	SS316LN-IG	12	M12×30
28	HEXAGON_HEAD_BOLT	SS316LN-IG	2	M6×20
29	HEXAGON_SOCKET_HEAD_CAP_SCREW	SS316LN-IG	4	M8×30
30	HEXAGON_SOCKET_HEAD_CAP_SCREW	SS316LN-IG	26	M6×30
31	HEXAGON_NUT	SS316LN-IG	12	M12

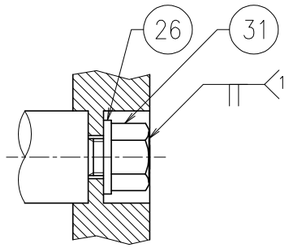

Detail B (1:2)

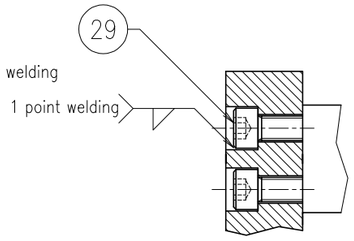

Detail C (1:2)

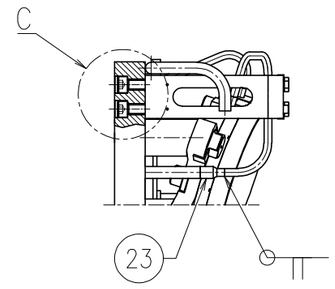

view A–A

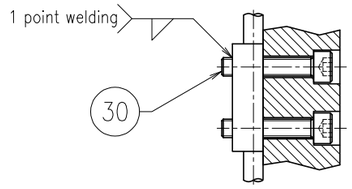

Detail D (1:2)
(Plan A)

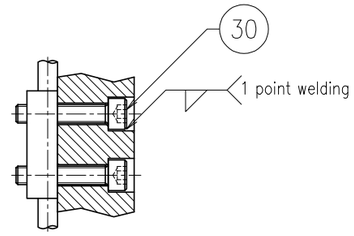

Detail D (1:2)
(Plan B)

NOTE
1. Protect the mirror surface during assembly.
2. Welding of pipes requires full penetration welding.
3. Welding of part number 30 is performed according to plan A. However, if access is difficult, plan B will be used.

REMARKS		APPROVED	REVIEWED	DRAWN	DATE 2021.11.30	PBS TITLE Diagnostics Poloidal Polarimeter		PROJECTION	SIZE A3
	QST National Institutes for Quantum and Radiological Science and Technology				SCALE 1 : 5	DRAWING TITLE LEMM_FIRST_MODULE_ASSEMBLY	DRAWING NO. JADA-55342DW0100	SHEET NO. L-02	REVISION 0

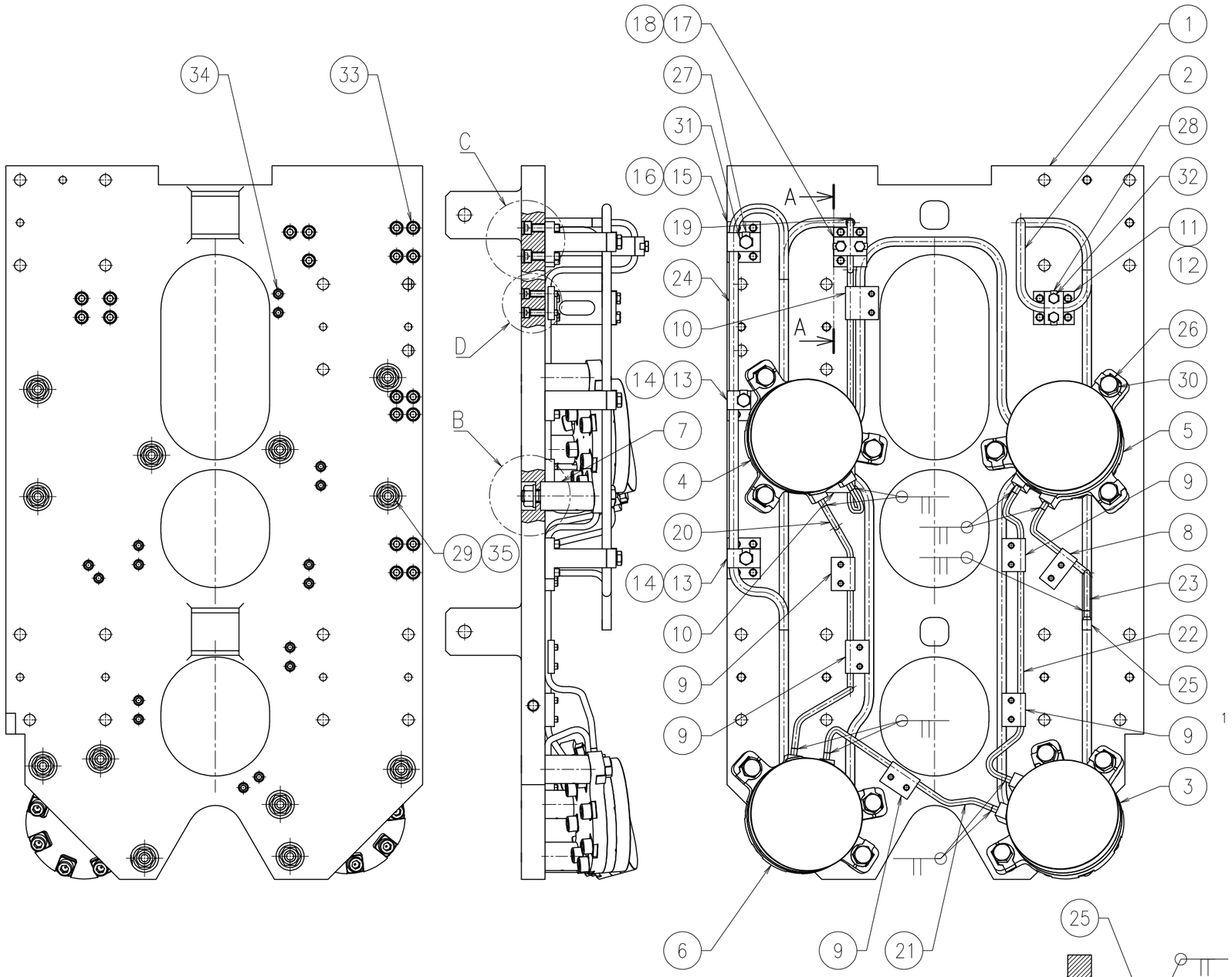

No.	Name	Material	Quantity	Remarks
1	LEMM_SECOND_BASE_PLATE	SS316LN-IG	1	SHEET NO.L-05、L-07
2	LEMM_SECOND_BASE_PIPING	SS316LN-IG	1set	SHEET NO.L-09
3	MIRROR_ASSEMBLY(M2E2)		1set	SHEET NO.L-16
4	MIRROR_ASSEMBLY(M2E3)		1set	SHEET NO.L-17
5	MIRROR_ASSEMBLY(M2E4)		1set	SHEET NO.L-18
6	MIRROR_ASSEMBLY(M2E9)		1set	SHEET NO.L-19
7	LEMM_MIRROR_ROD	SS316LN-IG	12	SHEET NO.L-29
8	PIPING_SUPPORT_TYPE_1	SS316LN-IG	1	SHEET NO.L-30
9	PIPING_SUPPORT_TYPE_6	SS316LN-IG	5	SHEET NO.L-30
10	PIPING_SUPPORT_TYPE_15	SS316LN-IG	2	SHEET NO.L-30
11	PIPING_SUPPORT_PILLAR_TYPE_1	SS316LN-IG	1	SHEET NO.L-31
12	PIPING_SUPPORT_COVER_TYPE_1	SS316LN-IG	1	SHEET NO.L-33
13	PIPING_SUPPORT_PILLAR_TYPE_4	SS316LN-IG	1	SHEET NO.L-32
14	PIPING_SUPPORT_COVER_TYPE_4	SS316LN-IG	1	SHEET NO.L-33
15	PIPING_SUPPORT_PILLAR_TYPE_5	SS316LN-IG	2	SHEET NO.L-32
16	PIPING_SUPPORT_COVER_TYPE_5	SS316LN-IG	2	SHEET NO.L-33
17	PIPING_SUPPORT_PILLAR_TYPE_6	SS316LN-IG	1	SHEET NO.L-33
18	PIPING_SUPPORT_COVER_TYPE_6	SS316LN-IG	1	SHEET NO.L-33
19	LEMM_SECOND_MIRROR_PIPING_TYPE_1	SS316LN-IG	1	SHEET NO.L-35
20	LEMM_SECOND_MIRROR_PIPING_TYPE_2	SS316LN-IG	1	SHEET NO.L-35
21	LEMM_SECOND_MIRROR_PIPING_TYPE_3	SS316LN-IG	1	SHEET NO.L-35
22	LEMM_SECOND_MIRROR_PIPING_TYPE_4	SS316LN-IG	1	SHEET NO.L-35
23	LEMM_SECOND_MIRROR_PIPING_TYPE_5	SS316LN-IG	1	SHEET NO.L-35
24	LEMM_CONNECTING_ROD_INTER_PIPING	SS316LN-IG	1	SHEET NO.L-37
25	REDUCER	SS316LN-IG	2	SHEET NO.L-45
26	TAB_WASHER_M12	SS316LN-IG	12	SHEET NO.L-45
27	TAB_WASHER_M8	SS316LN-IG	3	SHEET NO.L-45
28	TAB_WASHER_M6	SS316LN-IG	4	SHEET NO.L-45
29	SPECIAL_WASHER_M12	SS316LN-IG	12	SHEET NO.L-45
30	HEXAGON_HEAD_BOLT	SS316LN-IG	12	M12×30
31	HEXAGON_HEAD_BOLT	SS316LN-IG	3	M8×20
32	HEXAGON_HEAD_BOLT	SS316LN-IG	4	M6×20
33	HEXAGON_SOCKET_HEAD_CAP_SCREW	SS316LN-IG	19	M8×30
34	HEXAGON_SOCKET_HEAD_CAP_SCREW	SS316LN-IG	14	M6×30
35	HEXAGON_NUT	SS316LN-IG	12	M12

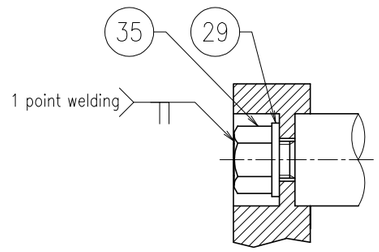

Detail B (1:2)

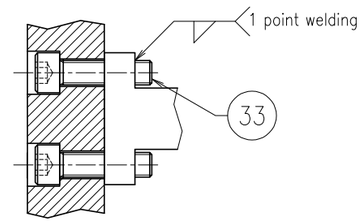

Detail C (1:2)

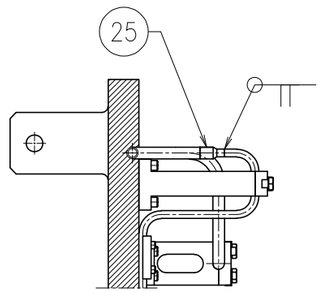

Sectional view A–A

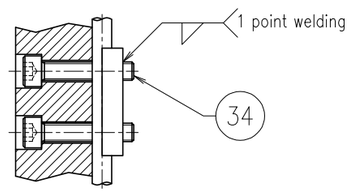

Detail D (1:2)
(Plan A)

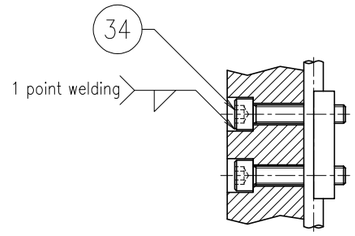

Detail D (1:2)
(Plan B)

NOTE
1. Protect the mirror surface during assembly.
2. Welding of pipes requires full penetration welding.
3. Welding of part number 34 is performed according to plan A. However, if access is difficult, plan B will be used.

REMARKS		APPROVED	REVIEWED	DRAWN	DATE 2021.11.30	PBS TITLE Diagnostics Poloidal Polarimeter	PROJECTION	SIZE A3
	QST National Institutes for Quantum and Radiological Science and Technology				SCALE 1 : 5	DRAWING TITLE LEMM_SECOND_MODULE_ASSEMBLY	DRAWING NO. JADA-55342DW0100 / SHEET NO. L-03	REVISION 0

General Tolerance : ISO 2768 m-K
Surface roughness not indicated : Ra6.3

NOTE
1. This drawing shows the first base plate of the LEMM.
2. The ridges and corners should be chamfered(about C0.2), and there should be no burrs.
3. After processing, perform degreasing cleaning.

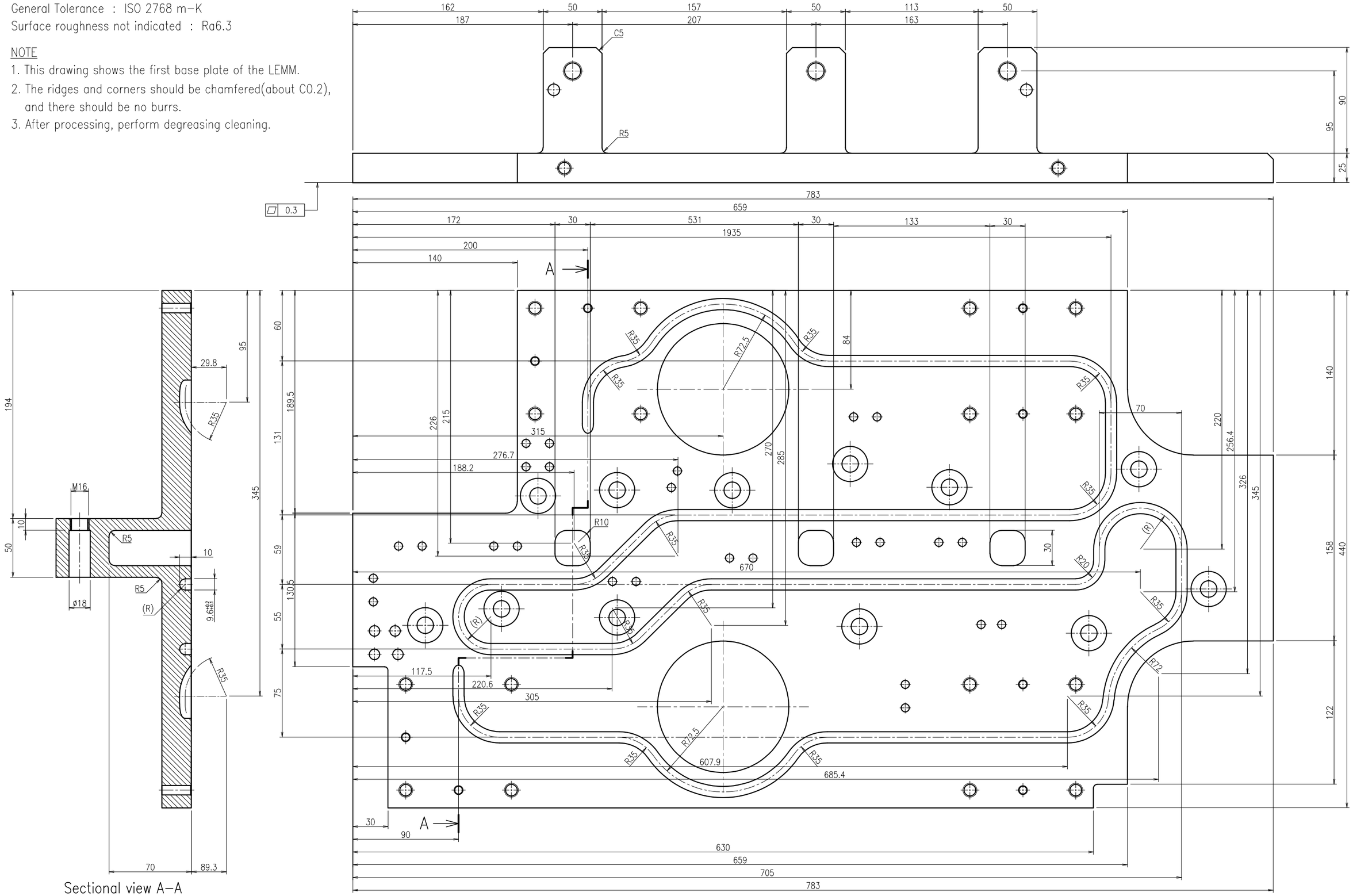

REMARKS		APPROVED	REVIEWED	DRAWN	DATE 2021.11.30	PBS TITLE Diagnostics Poloidal Polarimeter		PROJECTION	SIZE A3
	QST National Institutes for Quantum and Radiological Science and Technology				SCALE 1 : 3	DRAWING TITLE LEMM_FIRST_BASE_PLATE(1/2)	DRAWING NO. JADA-55342DW0100	SHEET NO. L-04	REVISION 0

General Tolerance : ISO 2768 m-K
Surface roughness not indicated : Ra6.3

NOTE
1. This drawing shows the second base plate of the LEMM.
2. The ridges and corners should be chamfered(about C0.2), and there should be no burrs.
3. After processing, perform degreasing cleaning.

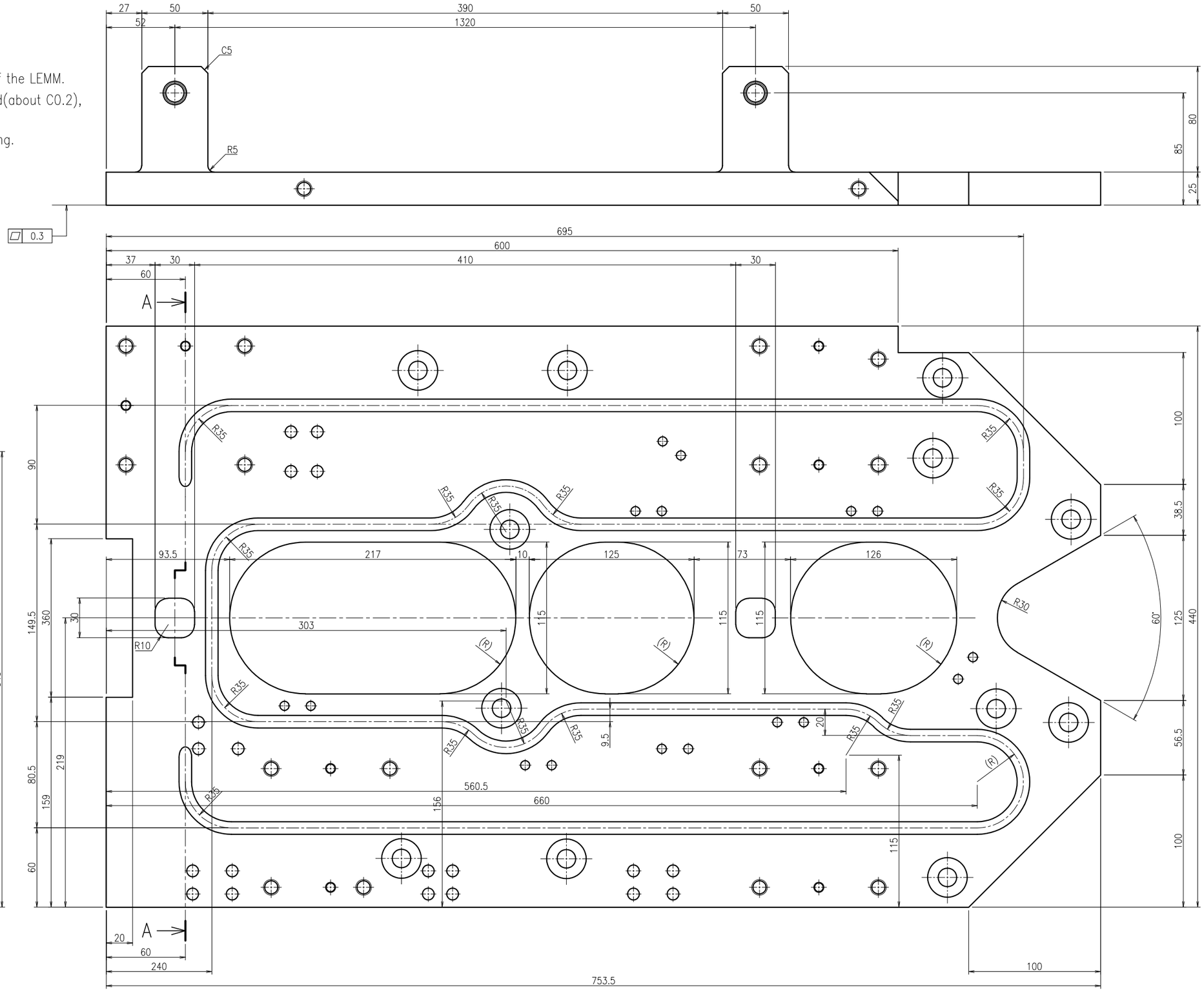

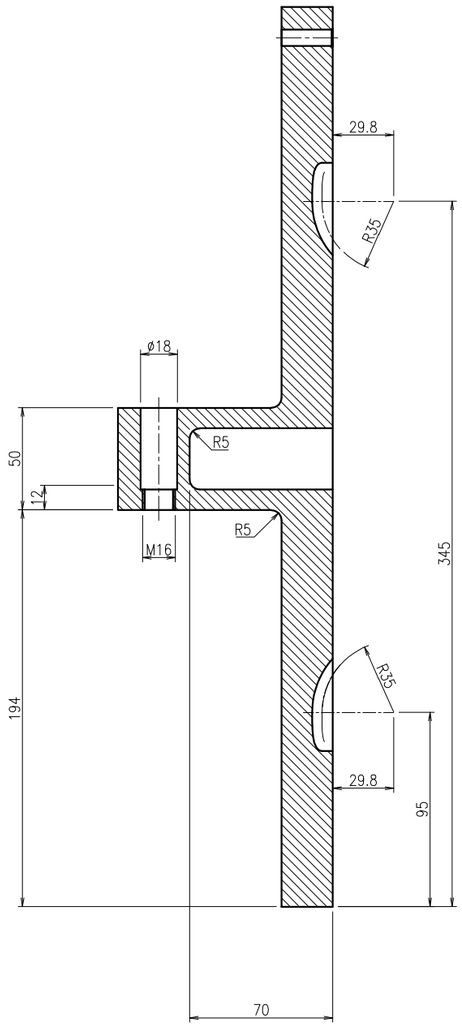

Sectional view A-A

REMARKS		APPROVED	REVIEWED	DRAWN	DATE 2021.11.30	PBS TITLE Diagnostics Poloidal Polarimeter	PROJECTION	SIZE A3
	QST National Institutes for Quantum and Radiological Science and Technology				SCALE 1 : 3	DRAWING TITLE LEMM_SECOND_BASE_PLATE(1/2)	DRAWING NO. JADA-55342DW0100	SHEET NO. L-05 / REVISION 0

General Tolerance : ISO 2768 m-K
Surface roughness not indicated : Ra6.3

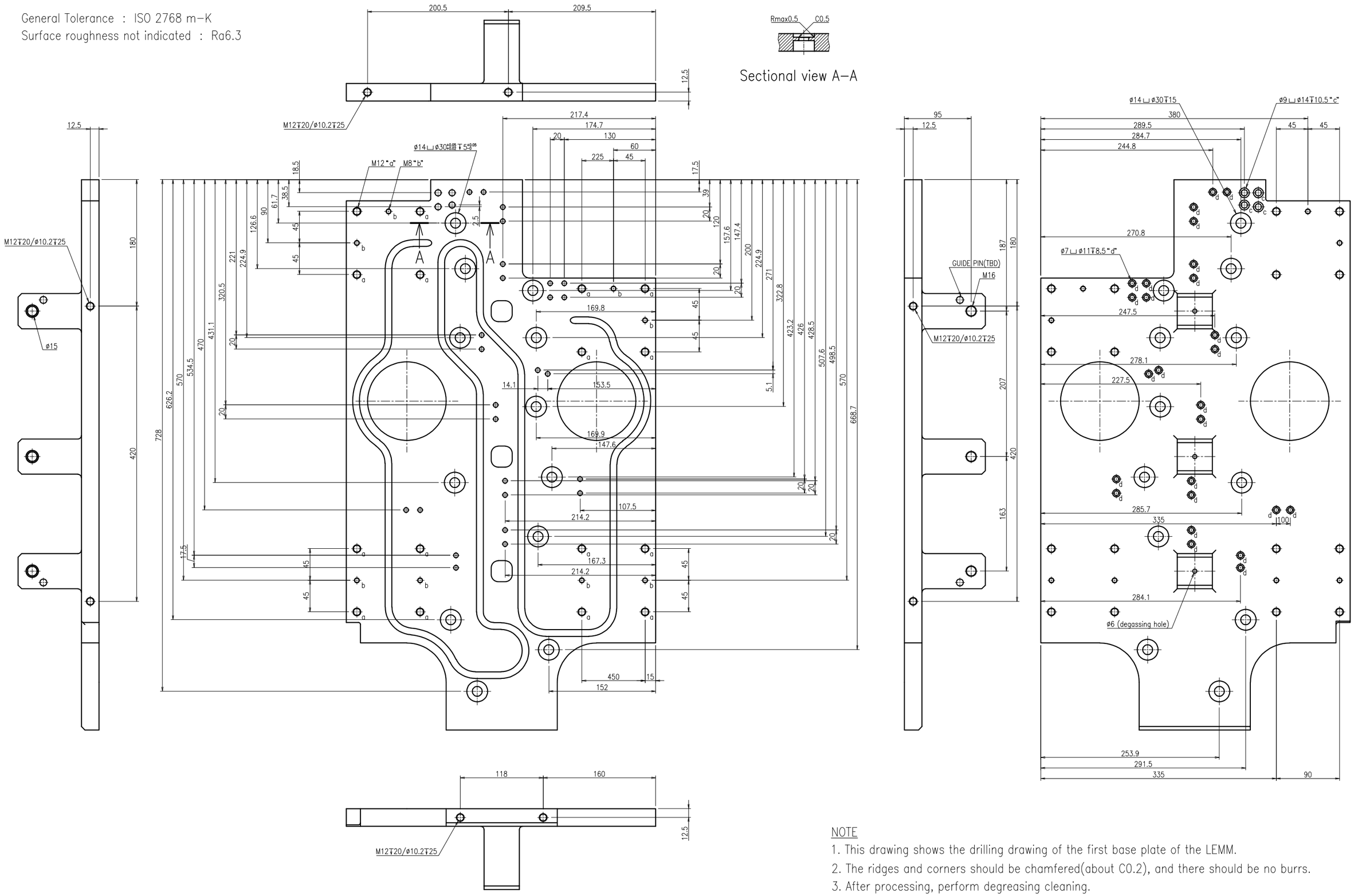

NOTE
1. This drawing shows the drilling drawing of the first base plate of the LEMM.
2. The ridges and corners should be chamfered(about C0.2), and there should be no burrs.
3. After processing, perform degreasing cleaning.

REMARKS		APPROVED	REVIEWED	DRAWN	DATE 2021.11.30	PBS TITLE Diagnostics Poloidal Polarimeter		PROJECTION	SIZE A3
	QST National Institutes for Quantum and Radiological Science and Technology				SCALE 1 : 5	DRAWING TITLE LEMM_FIRST_BASE_PLATE(2/2)	DRAWING NO. JADA-55342DW0100	SHEET NO. L-06	REVISION 0

General Tolerance : ISO 2768 m-K
Surface roughness not indicated : Ra6.3

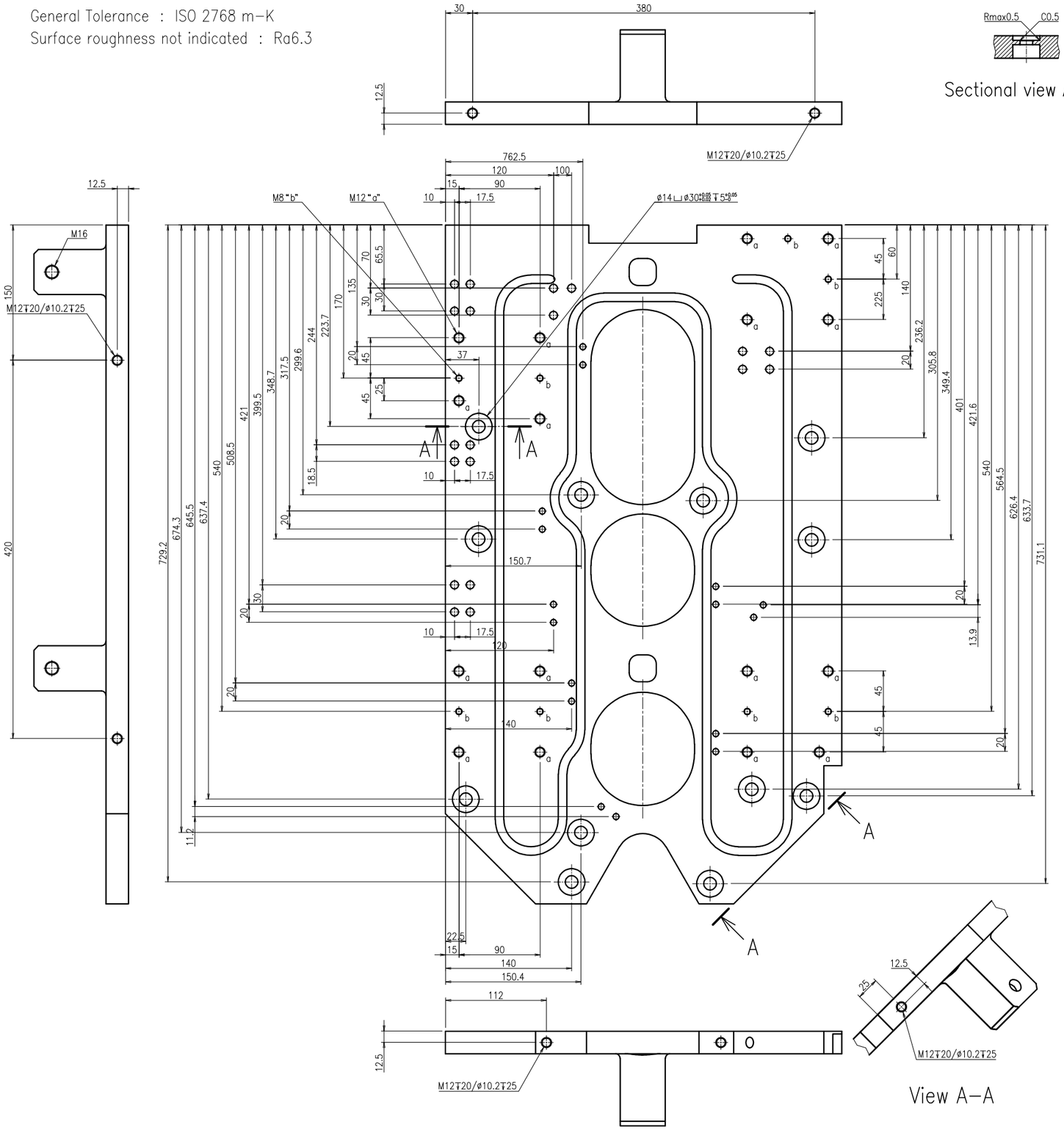

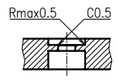

Sectional view A-A

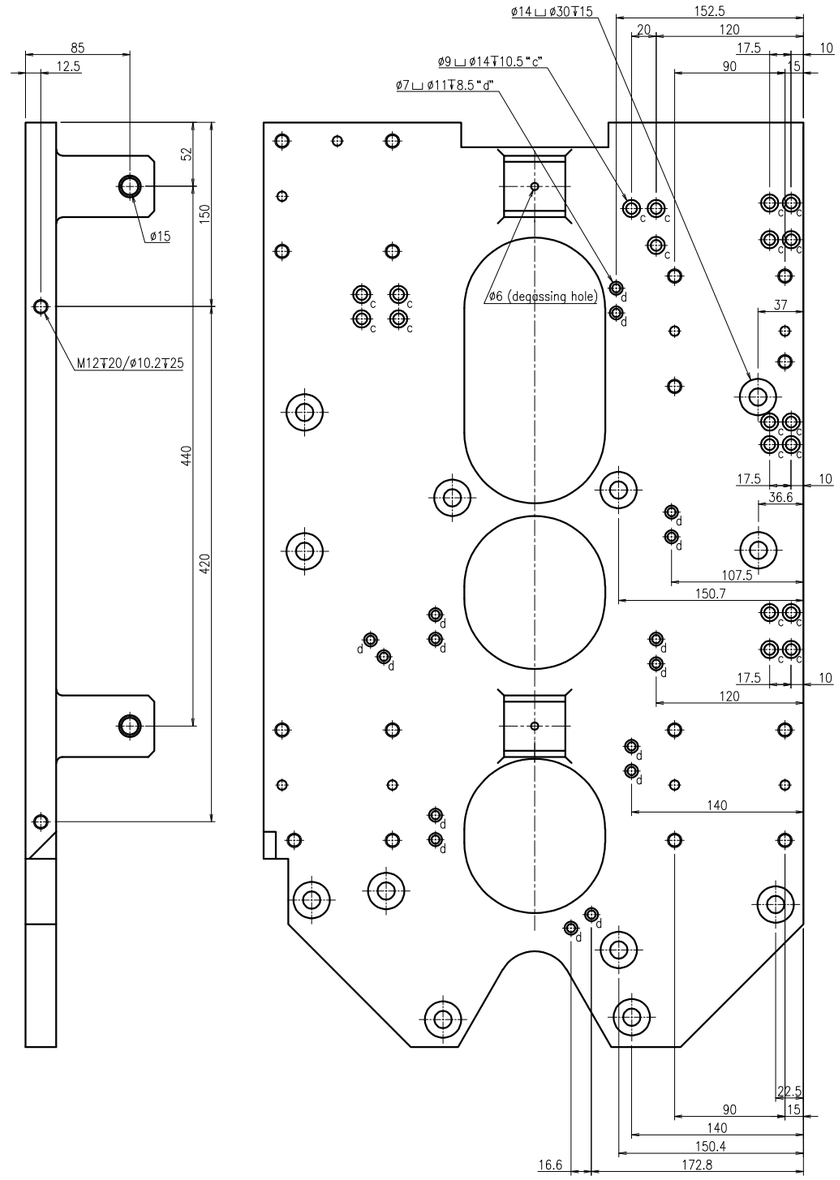

NOTE
1. This drawing shows the drilling drawing of the second base plate of the LEMM.
2. The ridges and corners should be chamfered(about C0.2), and there should be no burrs.
3. After processing, perform degreasing cleaning.

REMARKS		APPROVED	REVIEWED	DRAWN	DATE	PBS TITLE		PROJECTION	SIZE
	QST National Institutes for Quantum and Radiological Science and Technology				2021.11.30	Diagnostics Poloidal Polarimeter			A3
					SCALE 1 : 5	DRAWING TITLE LEMM_SECOND_BASE_PLATE(2/2)	DRAWING NO. JADA-55342DW0100	SHEET NO. L-07	REVISION 0

Name	Material	Quantity	Remarks
LOWER_FIRST_BASE_PIPING	SS316LN-IG	1set	

NOTE

1. This drawing shows the cooling water piping embedded in the base on the first mirror side of the UEMM.
2. The bending dimension of this pipe is processed according to the groove of the base plate (SHEET NO.L-04).
   When bending pipes, a manufacture shall follow 3D CAD that QST will provide.
3. A manufacture is allowed to join pipes by welding with full penetration. The manufacture shall specify the welding joints in their manufacturing drawing that will be prepared by MRR.
4. After processing, perform degreasing cleaning.

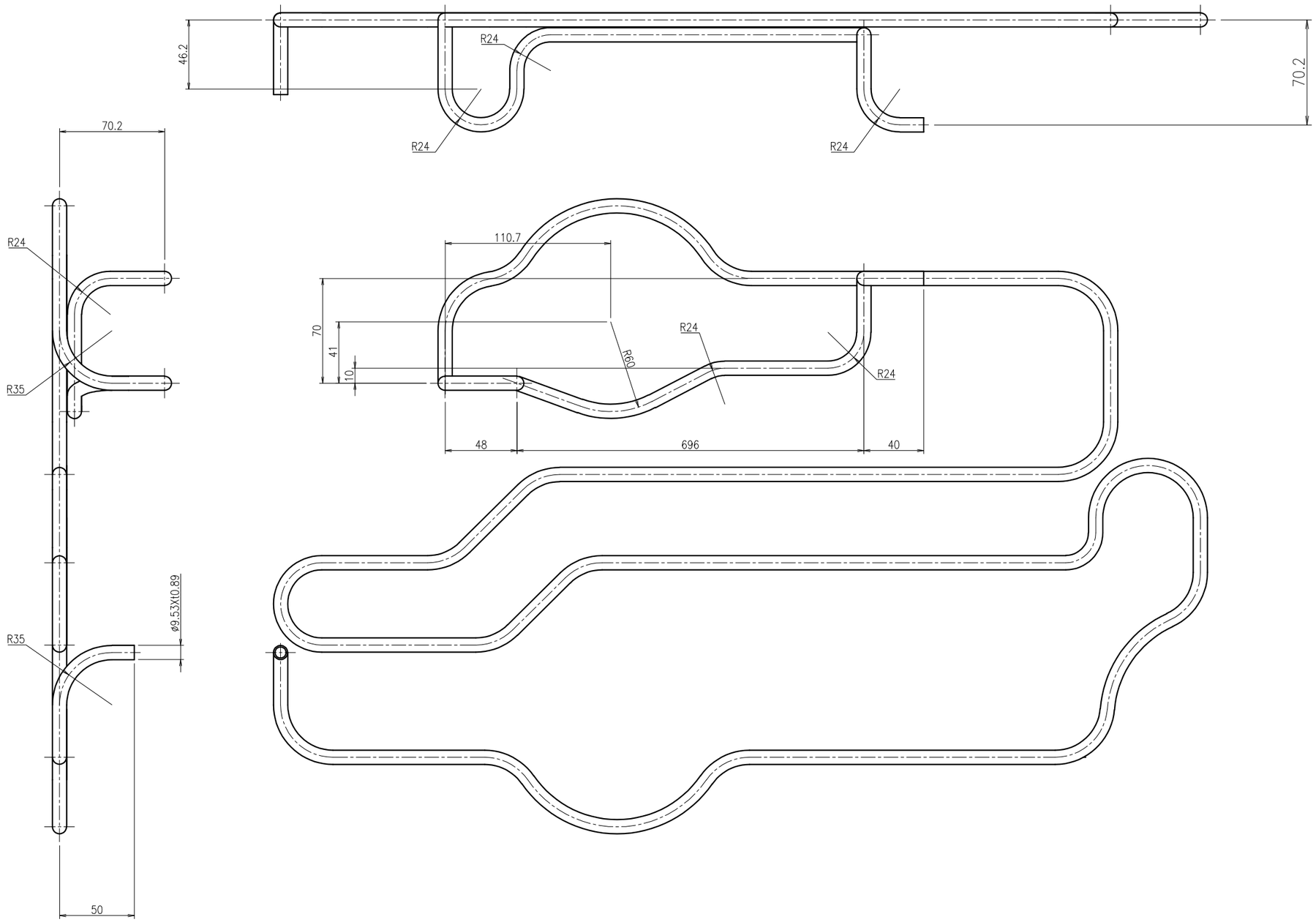

REMARKS		APPROVED	REVIEWED	DRAWN	DATE 2021.11.30	PBS TITLE Diagnostics Poloidal Polarimeter	PROJECTION	SIZE A3
	QST National Institutes for Quantum and Radiological Science and Technology				SCALE 1 : 3	DRAWING TITLE LEMM_FIRST_BASE_PIPING	DRAWING NO. JADA-55342DW0100 / SHEET NO. L-08	REVISION 0

Name	Material	Quantity	Remarks
LOWER_SECOND_BASE_PIPING	SS316LN-IG	1set	

NOTE

1. This drawing shows the cooling water piping embedded in the base on the first mirror side of the UEMM.
2. The bending dimension of this pipe is processed according to the groove of the base plate (SHEET NO.L-05).
   When bending pipes, a manufacture shall follow 3D CAD that QST will provide.
3. A manufacture is allowed to join pipes by welding with full penetration. The manufacture shall specify the welding joints in their manufacturing drawing that will be prepared by MRR.
4. After processing, perform degreasing cleaning.

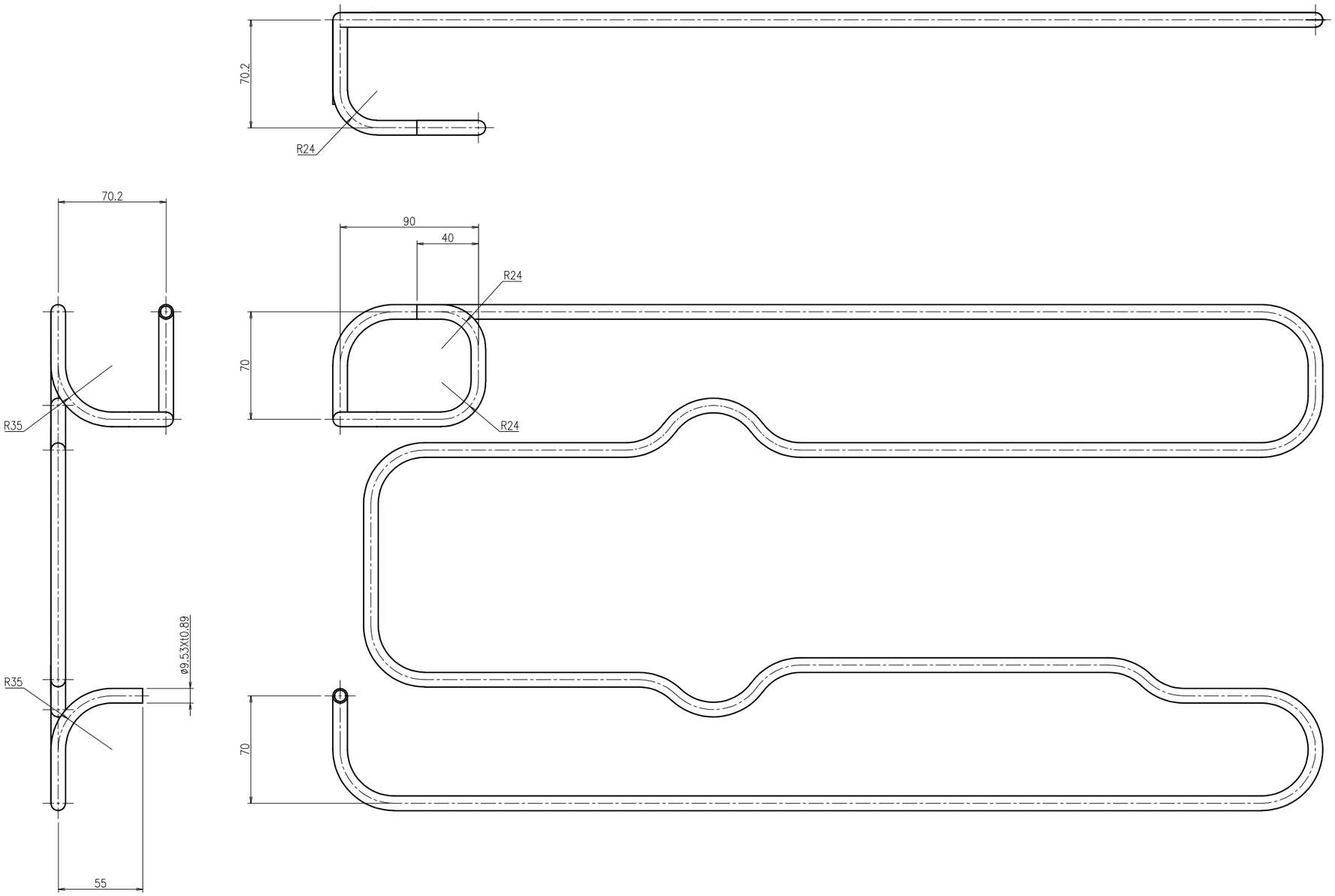

REMARKS		APPROVED	REVIEWED	DRAWN	DATE 2021.11.30	PBS TITLE Diagnostics Poloidal Polarimeter	PROJECTION	SIZE A3
	QST National Institutes for Quantum and Radiological Science and Technology				SCALE 1 : 3	DRAWING TITLE LEMM_SECOND_BASE_PIPING	DRAWING NO. JADA-55342DW0100 / SHEET NO. L-09	REVISION 0

IO APPROVED BY : VAYAKIS G. DATE : 18 MAR 2022 INTENDED USAGE : FOR TENDER

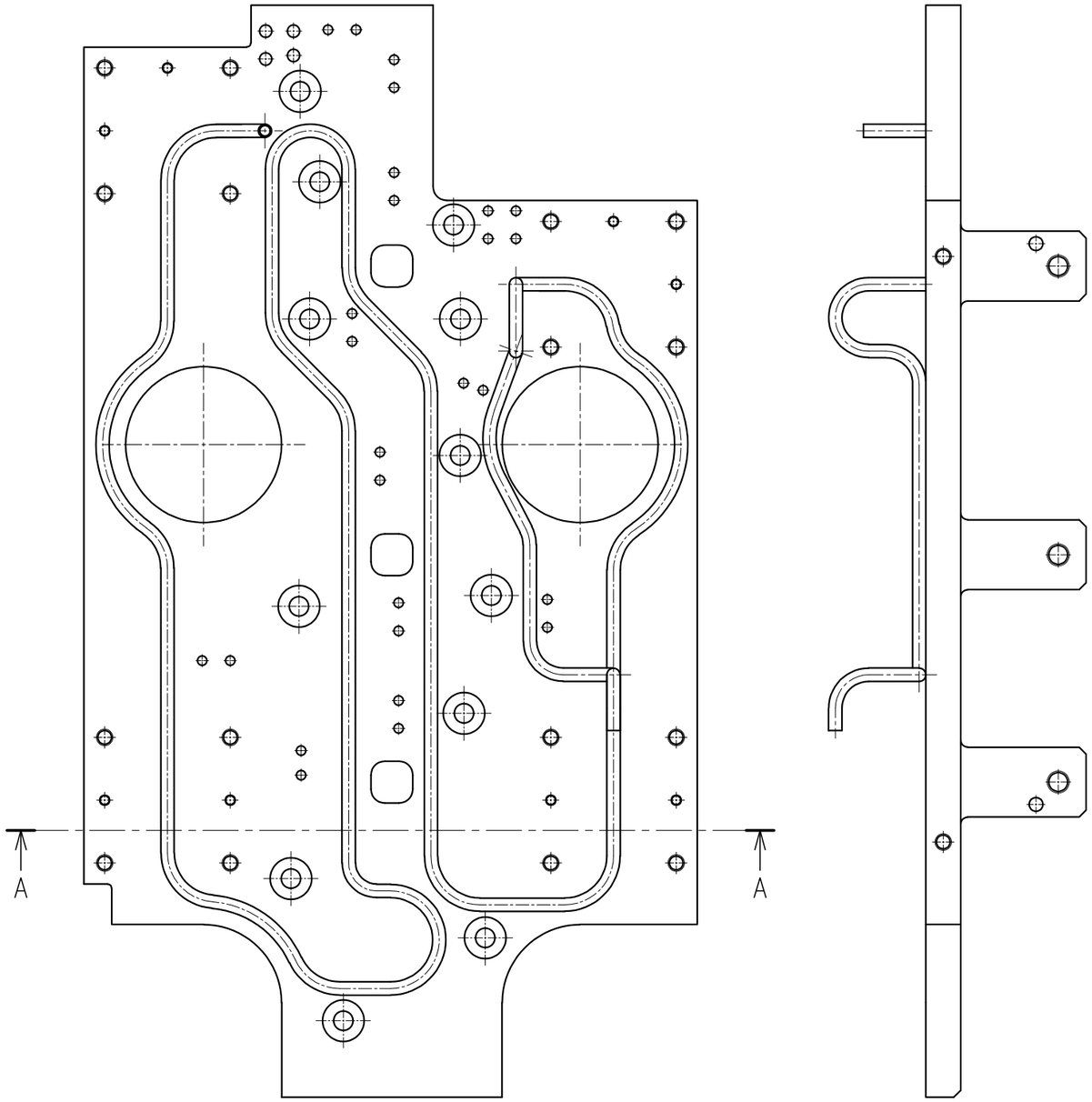

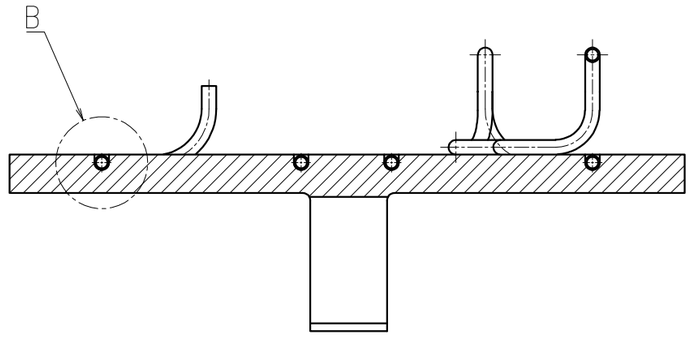

Sectional view A–A

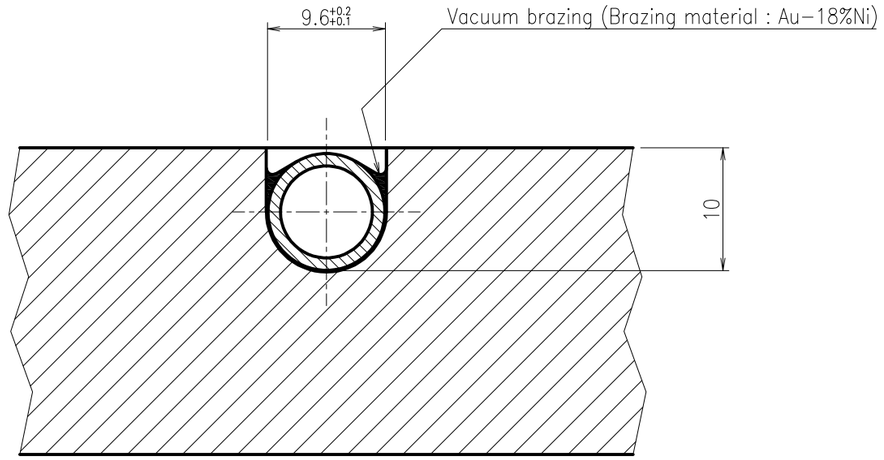

Detail B (2:1)

NOTE

1. This drawing shows the brazing process of piping to the first base plate of the LEMM.
2. The base plate drawing is shown on sheet number U–01 and the piping drawing is shown on sheet number U–01.
3. After processing, perform degreasing cleaning.

REMARKS		APPROVED	REVIEWED	DRAWN	DATE 2021.11.30	PBS TITLE Diagnostics Poloidal Polarimeter		PROJECTION	SIZE A3
	QST National Institutes for Quantum and Radiological Science and Technology				SCALE 1 : 4	DRAWING TITLE LEMM_FIRST_BASE_PLATE_BRAZING	DRAWING NO. JADA-55342DW0100	SHEET NO. L-10	REVISION 0

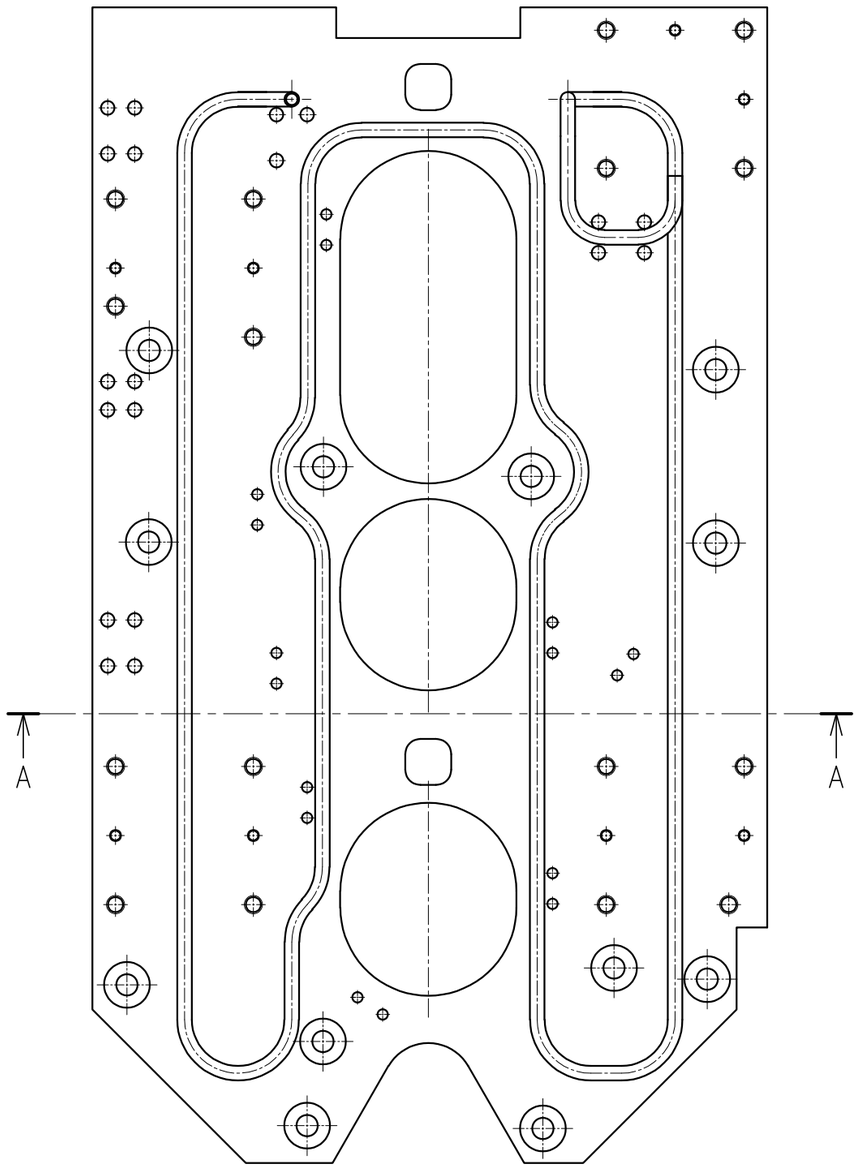

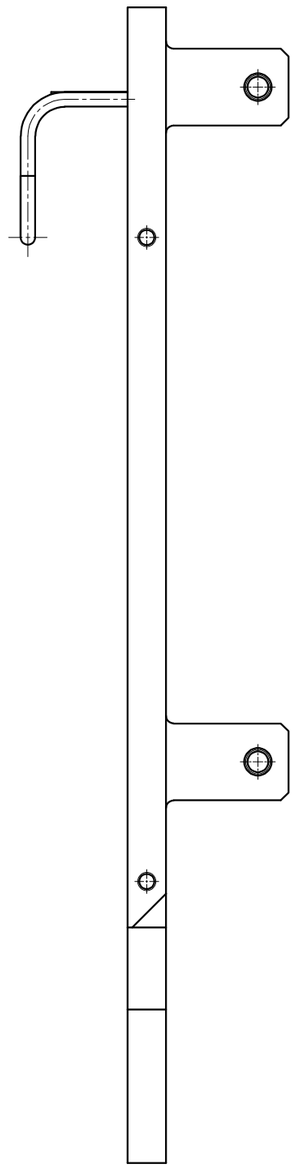

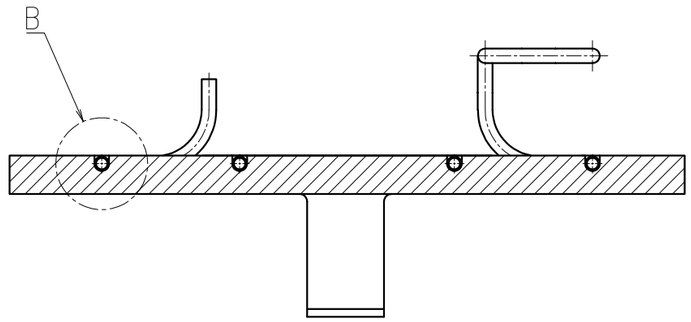

Sectional view A–A

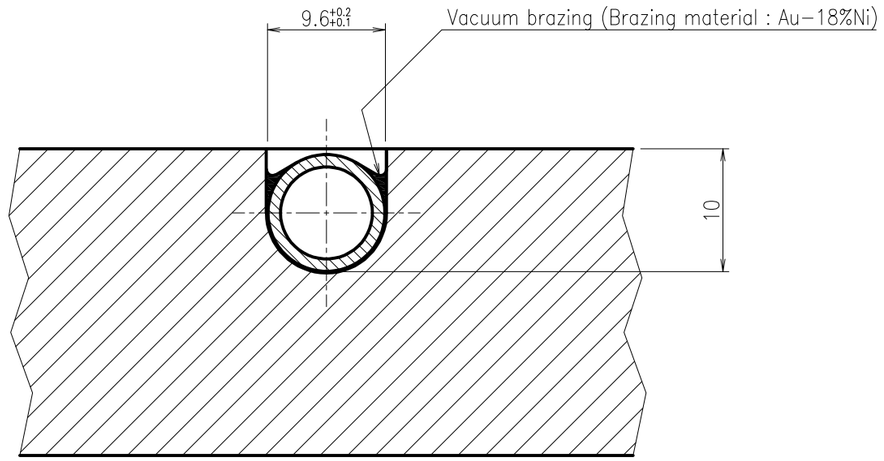

Detail B (2:1)

NOTE

1. This drawing shows the brazing process of piping to the second base plate of the LEMM.
2. The base plate drawing is shown on sheet number U–01 and the piping drawing is shown on sheet number U–01.
3. After processing, perform degreasing cleaning.

REMARKS		APPROVED	REVIEWED	DRAWN	DATE 2021.11.30	PBS TITLE Diagnostics Poloidal Polarimeter		PROJECTION	SIZE A3
	QST National Institutes for Quantum and Radiological Science and Technology				SCALE 1 : 4	DRAWING TITLE LEMM_SECOND_BASE_PLATE_BRAZING	DRAWING NO. JADA-55342DW0100	SHEET NO. L-11	REVISION 0

No.	Name	Material	Quantity	Remarks
1	TUNGSTEN_FIRST_MIRROR	Tungsten	1	SHEET NO.L-20
2	MIRROR_MOUNT (M1E2)	SS316LN-IG, CuCrZr	1set	SHEET NO.L-21
3	HEXAGON_SOCKET_HEAD_SCREW	ALLOY625	8	M10×L32 (with φ2 degassing hole)
4	SQUARE_WASHER	ALLOY625	8	SHEET NO.L-45

NOTE

1. This drawing shows the assembly drawing of the first mirror (M1E2) of the LEMM.

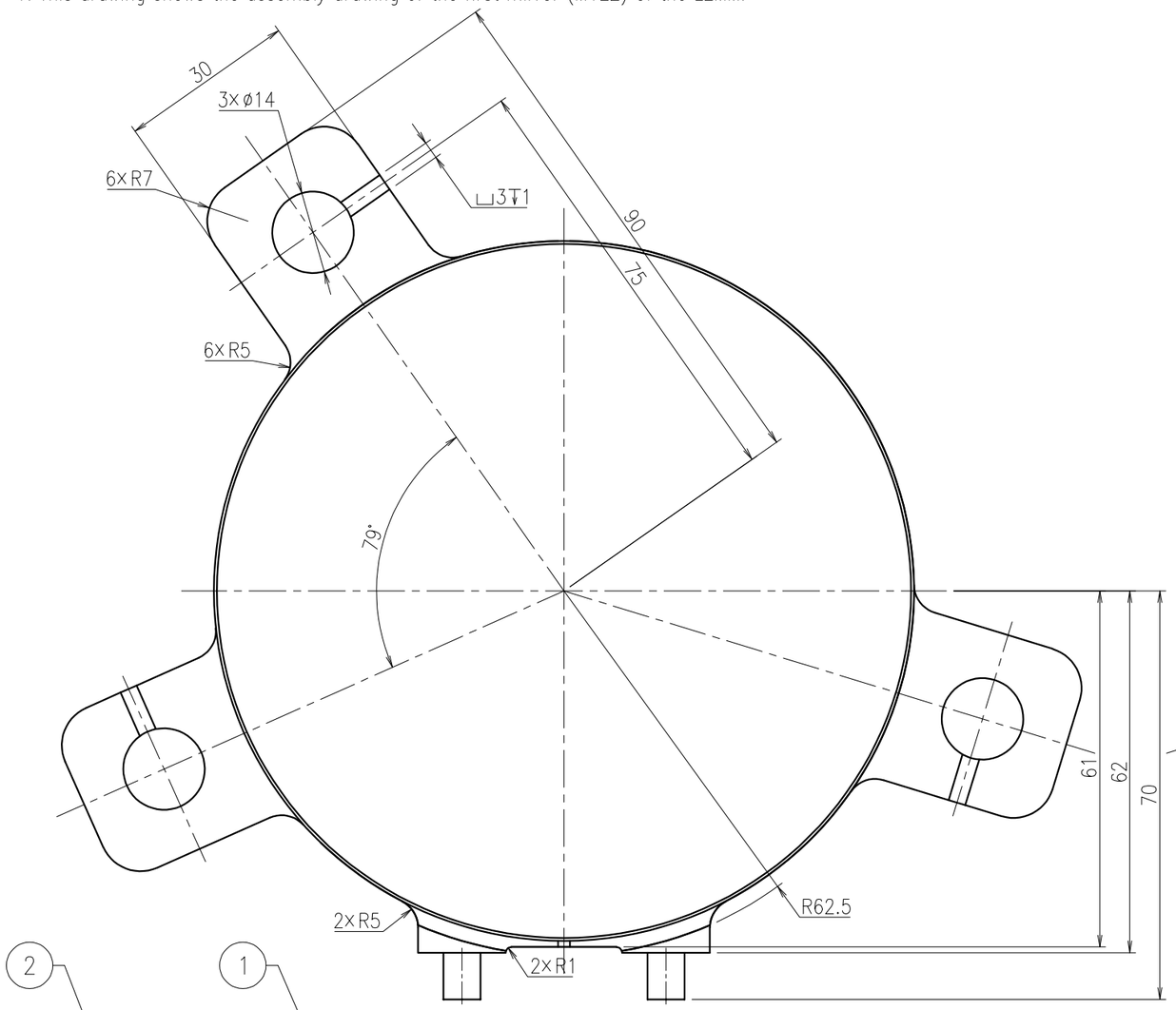

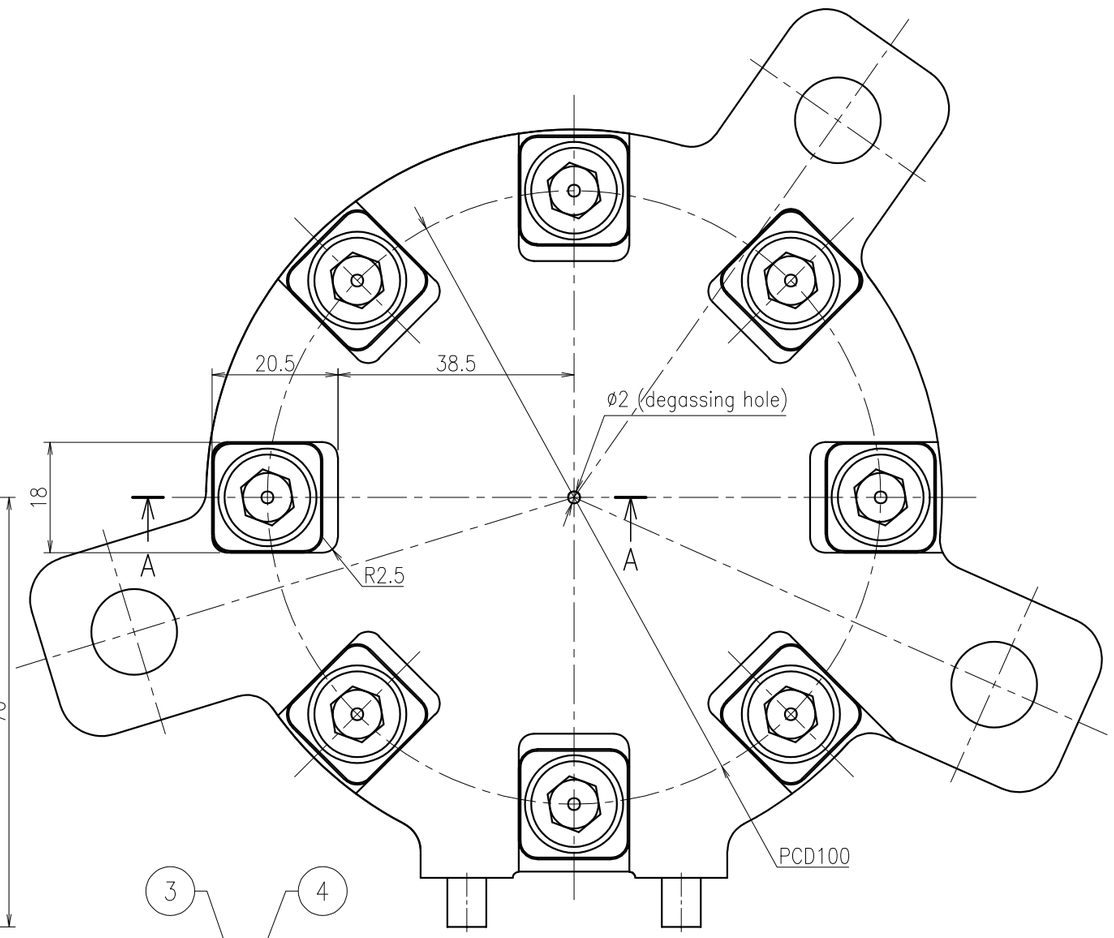

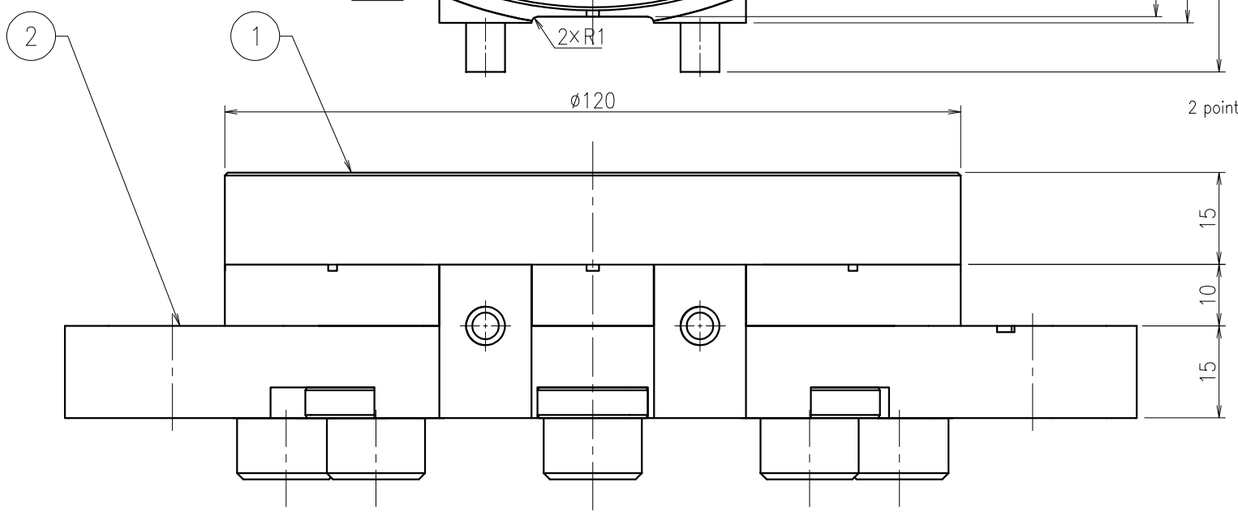

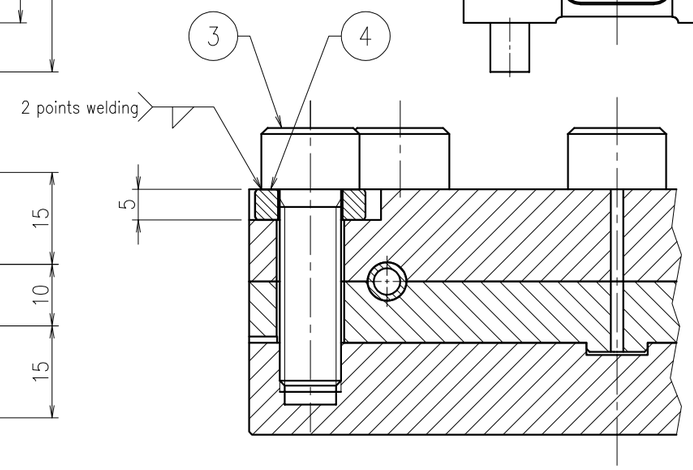

Sectional view A–A

REMARKS		APPROVED	REVIEWED	DRAWN	DATE	PBS TITLE		PROJECTION	SIZE
	QST National Institutes for Quantum and Radiological Science and Technology				2021.11.30	Diagnostics Poloidal Polarimeter			A3
					SCALE 1 : 1	DRAWING TITLE SECOND_MIRROR_ASSEMBLY(M1E2)	DRAWING NO. JADA-55342DW0100	SHEET NO. L-12	REVISION 0

No.	Name	Material	Quantity	Remarks
1	TUNGSTEN_FIRST_MIRROR	Tungsten	1	SHEET NO.L-20
2	MIRROR_MOUNT (M1E3)	SS316LN-IG, CuCrZr	1set	SHEET NO.L-22
3	HEXAGON_SOCKET_HEAD_SCREW	ALLOY625	8	M10×L32 (with φ2 degassing hole)
4	SQUARE_WASHER	ALLOY625	8	SHEET NO.L-45

NOTE

1. This drawing shows the assembly drawing of the first mirror (M1E3) of the LEMM.

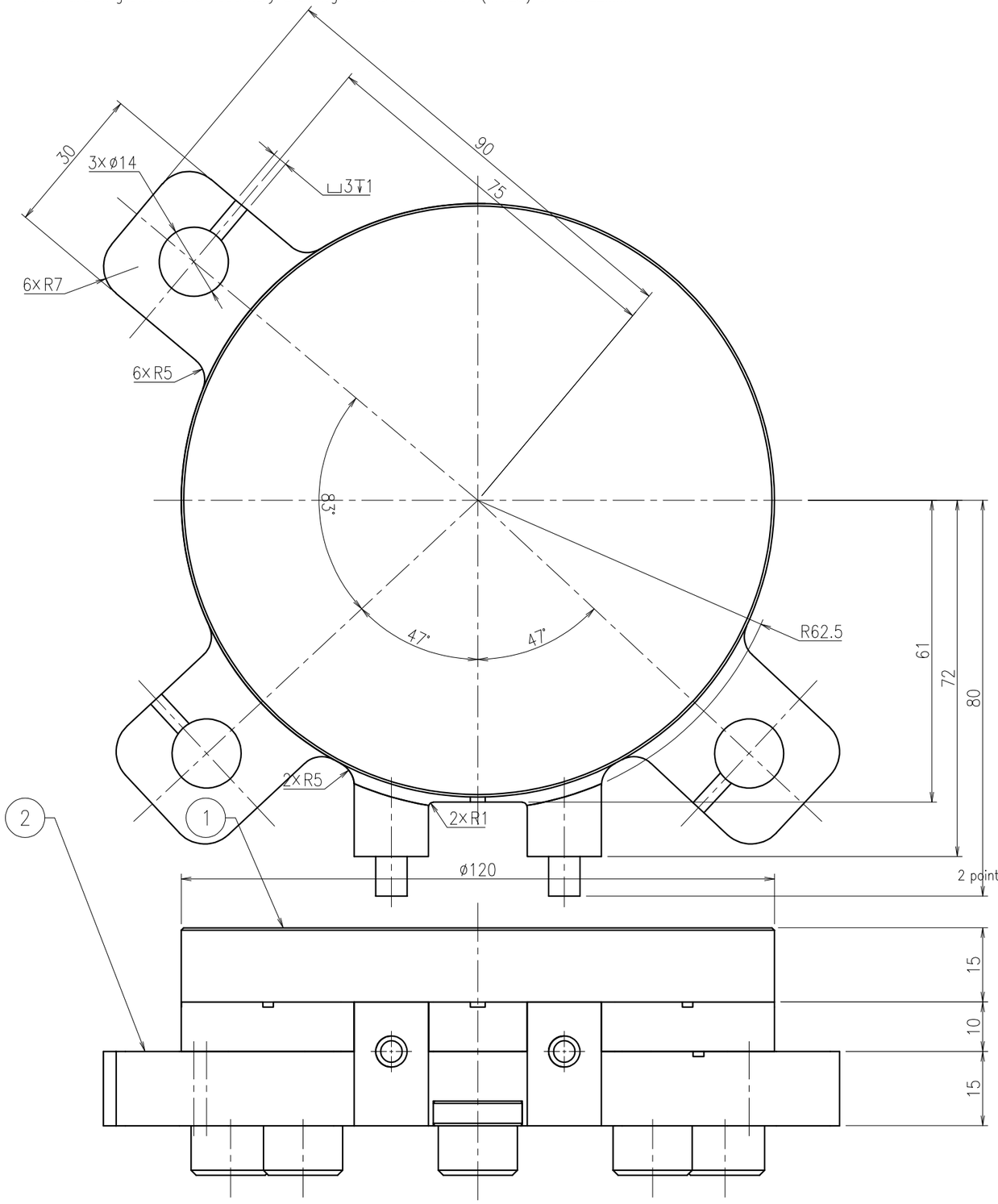

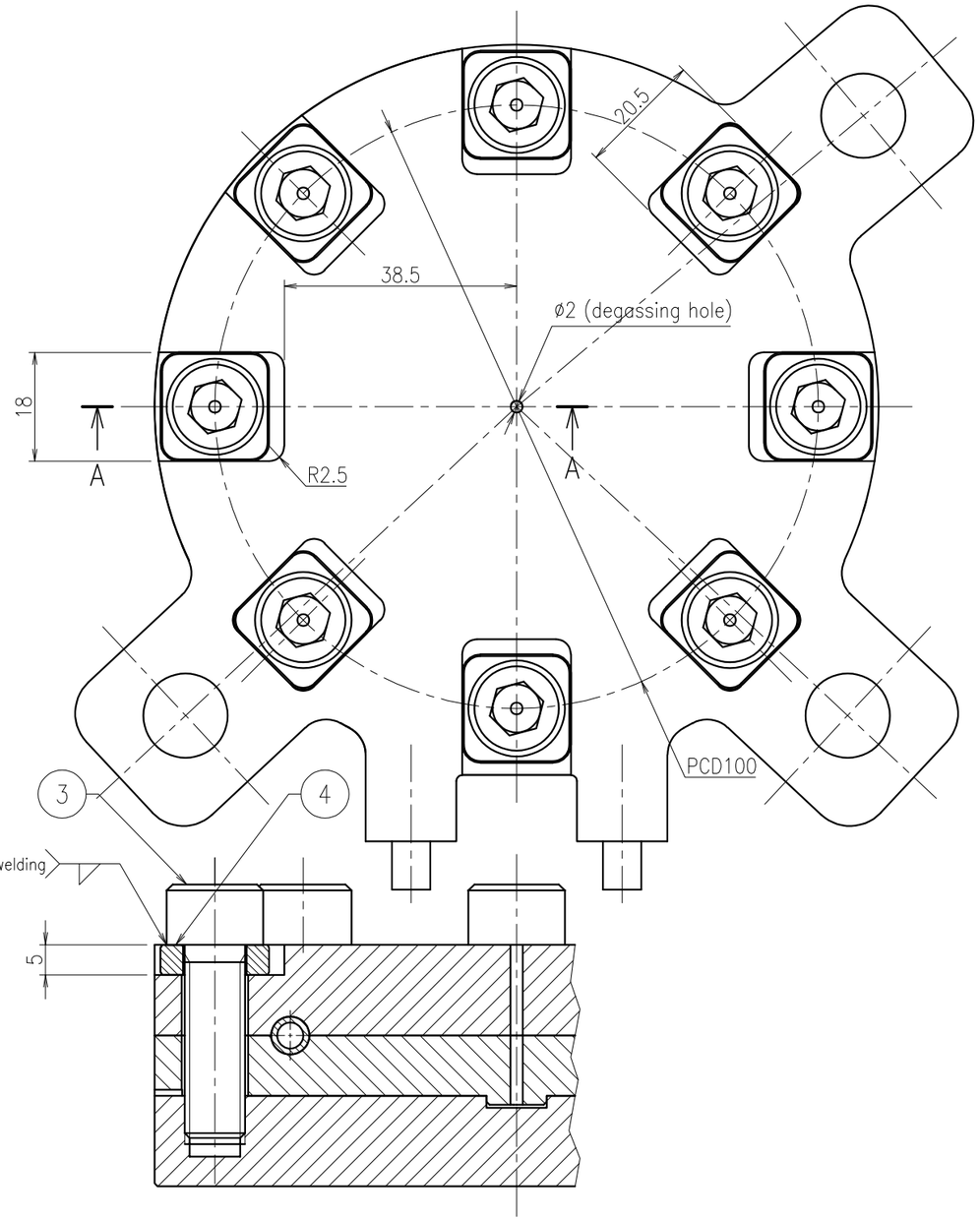

Sectional view A–A

REMARKS		APPROVED	REVIEWED	DRAWN	DATE 2021.11.30	PBS TITLE Diagnostics Poloidal Polarimeter		PROJECTION	SIZE A3
	QST National Institutes for Quantum and Radiological Science and Technology				SCALE 1 : 1	DRAWING TITLE SECOND_MIRROR_ASSEMBLY(M1E3)	DRAWING NO. JADA-55342DW0100	SHEET NO. L-13	REVISION 0

No.	Name	Material	Quantity	Remarks
1	TUNGSTEN_FIRST_MIRROR	Tungsten	1	SHEET NO.L-20
2	MIRROR_MOUNT (M1E4)	SS316LN-IG, CuCrZr	1set	SHEET NO.L-23
3	HEXAGON_SOCKET_HEAD_SCREW	ALLOY625	8	M10×L32 (with ϕ2 degassing hole)
4	SQUARE_WASHER	ALLOY625	8	SHEET NO.L-45

NOTE

1. This drawing shows the assembly drawing of the first mirror (M1E4) of the LEMM.

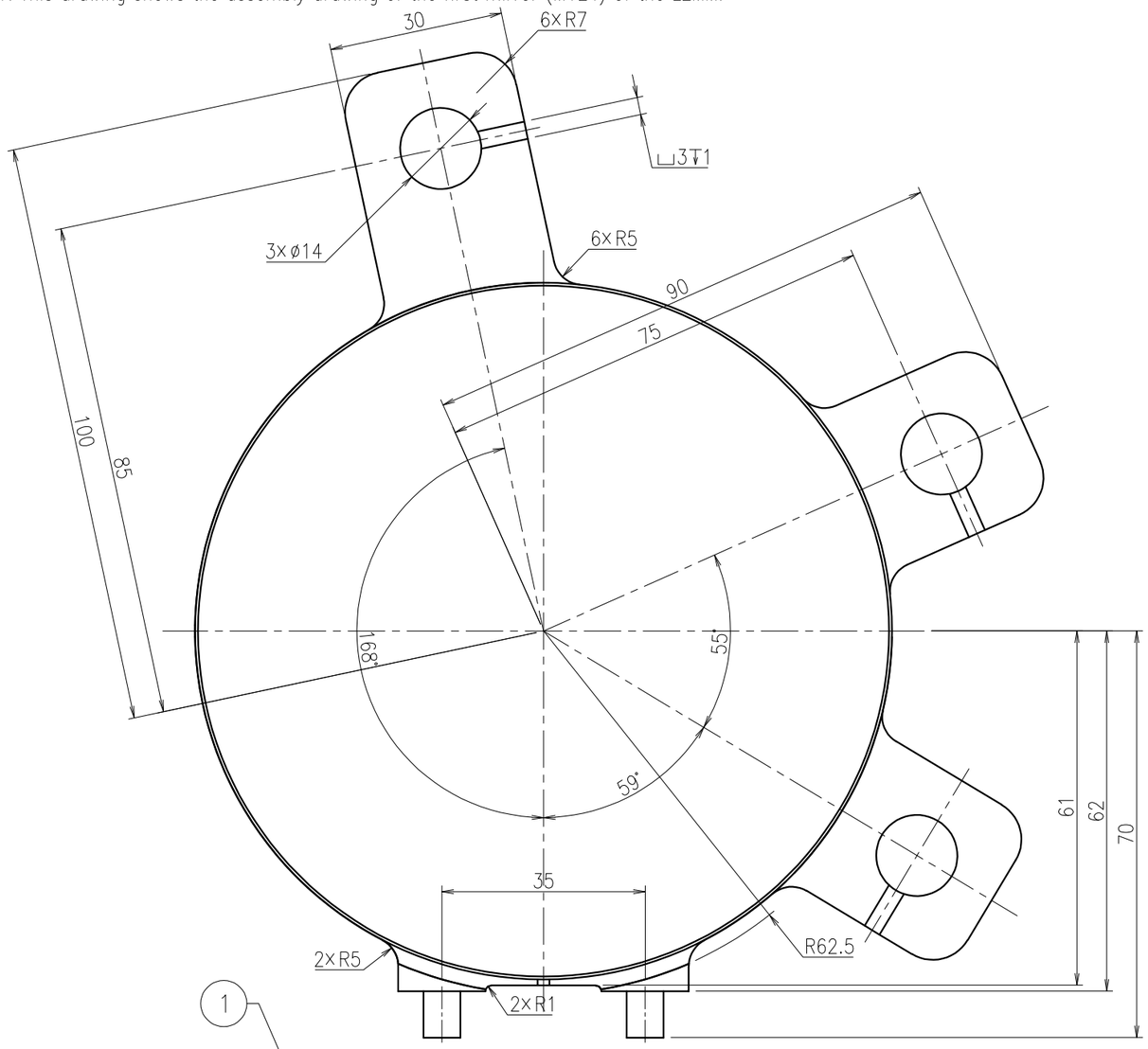

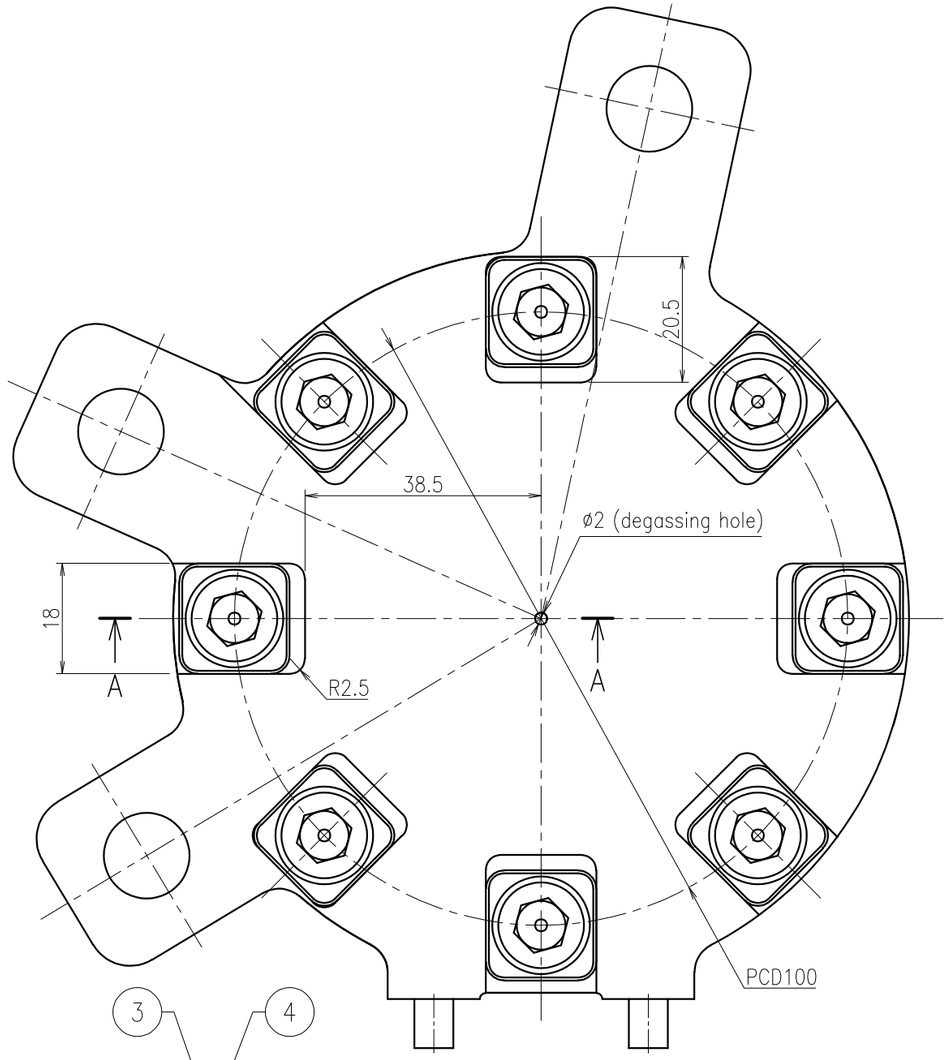

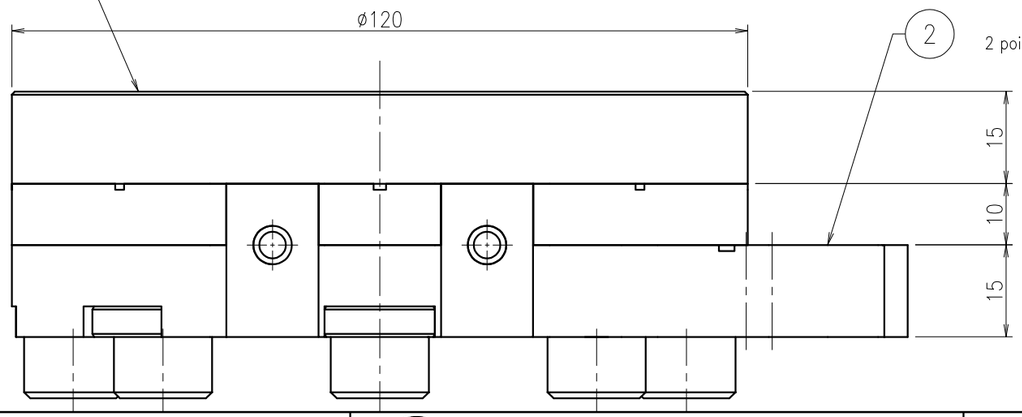

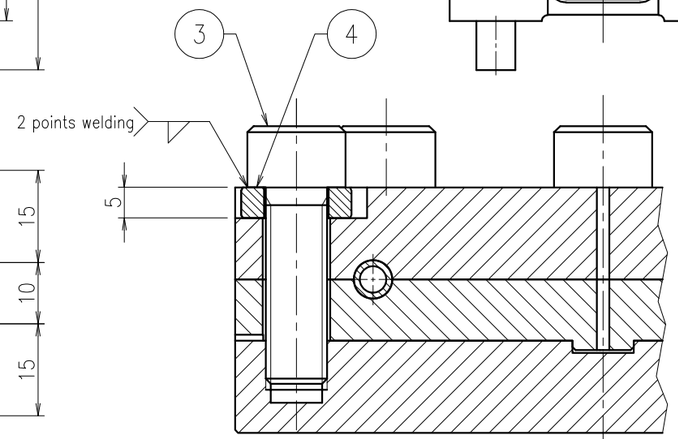

Sectional view A–A

REMARKS		APPROVED	REVIEWED	DRAWN	DATE 2021.11.30	PBS TITLE Diagnostics Poloidal Polarimeter		PROJECTION	SIZE A3
	QST National Institutes for Quantum and Radiological Science and Technology				SCALE 1 : 1	DRAWING TITLE SECOND_MIRROR_ASSEMBLY(M1E4)	DRAWING NO. JADA-55342DW0100	SHEET NO. L-14	REVISION 0

No.	Name	Material	Quantity	Remarks
1	TUNGSTEN_FIRST_MIRROR	Tungsten	1	SHEET NO.L-20
2	MIRROR_MOUNT (M1E9)	SS316LN-IG, CuCrZr	1set	SHEET NO.L-24
3	HEXAGON_SOCKET_HEAD_SCREW	ALLOY625	8	M10×L32 (with φ2 degassing hole)
4	SQUARE_WASHER	ALLOY625	8	SHEET NO.L-45

NOTE

1. This drawing shows the assembly drawing of the first mirror (M1E9) of the LEMM.

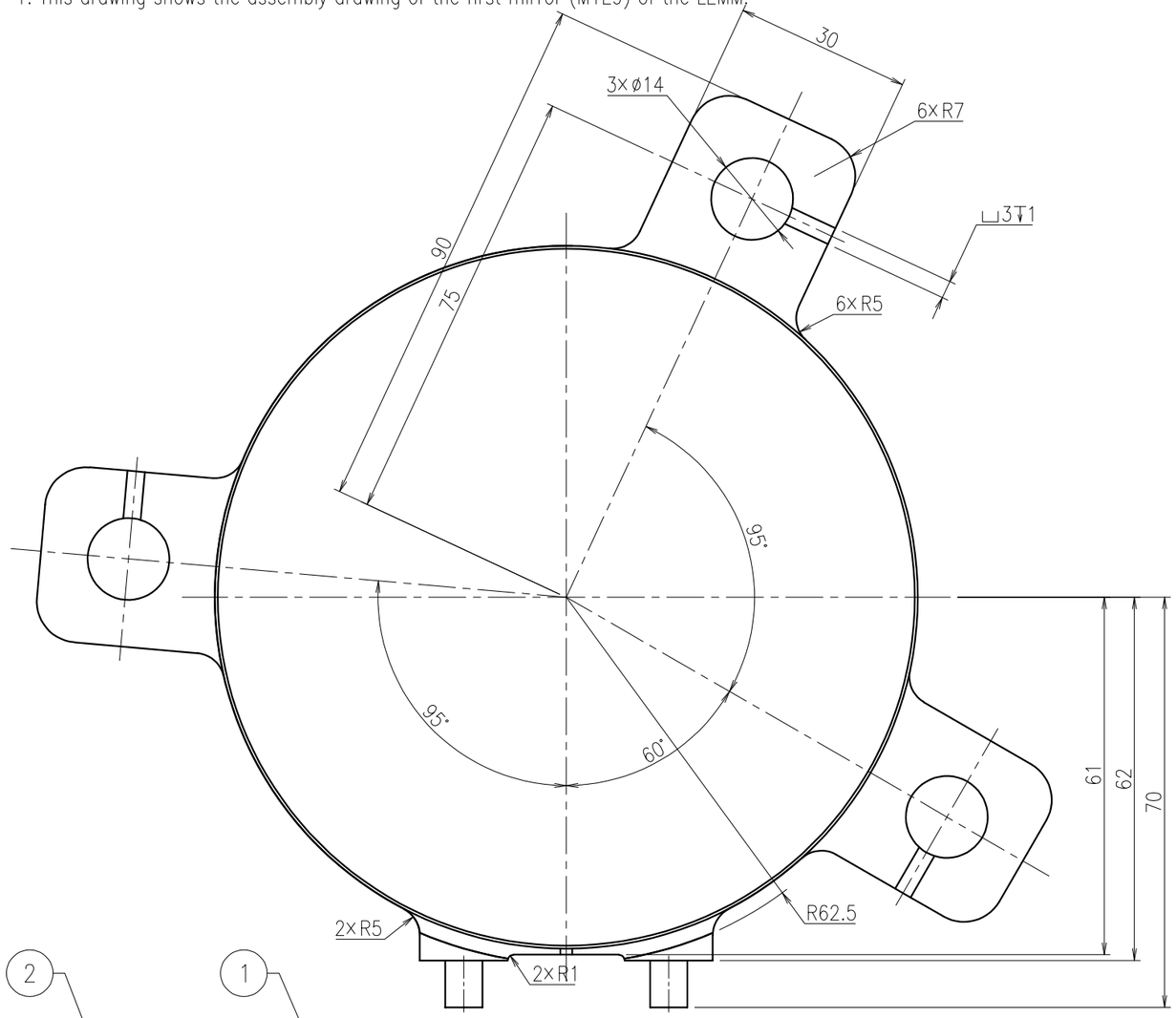

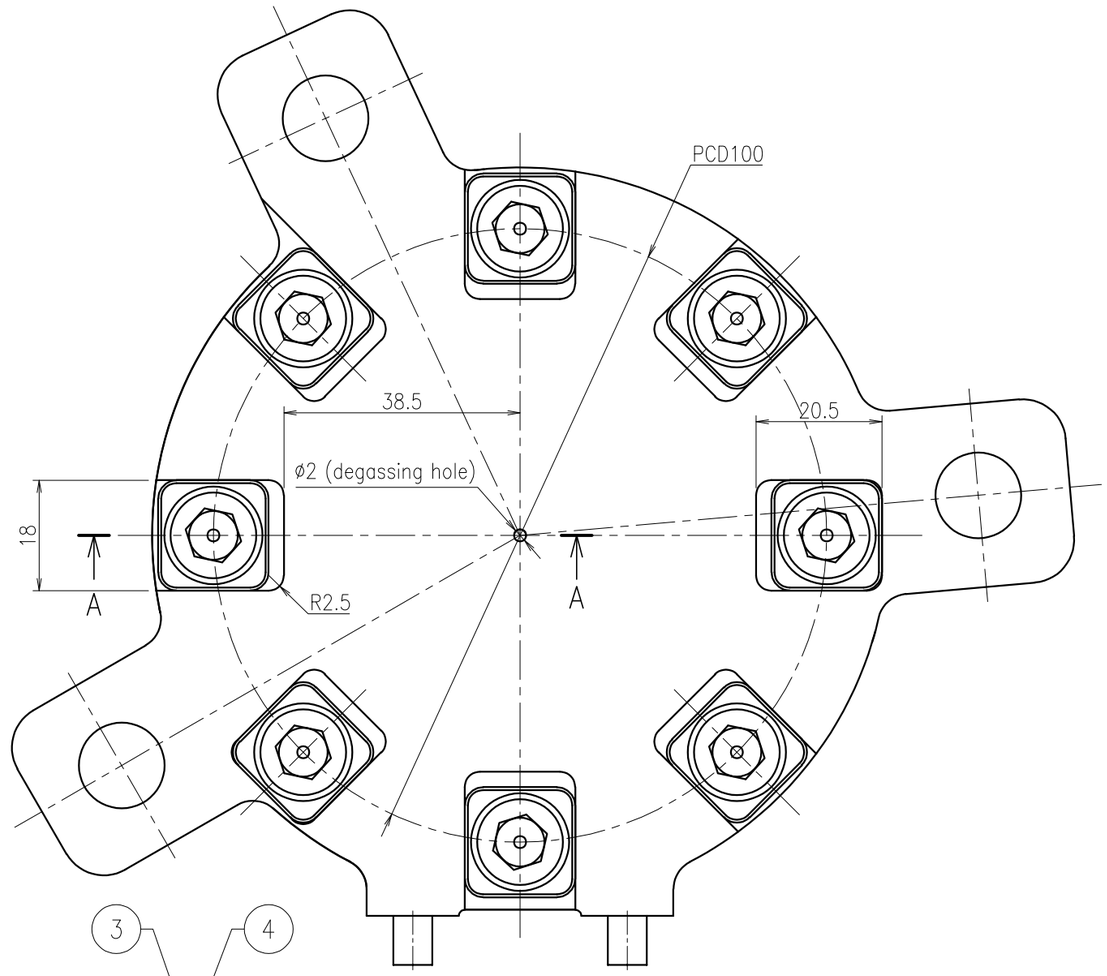

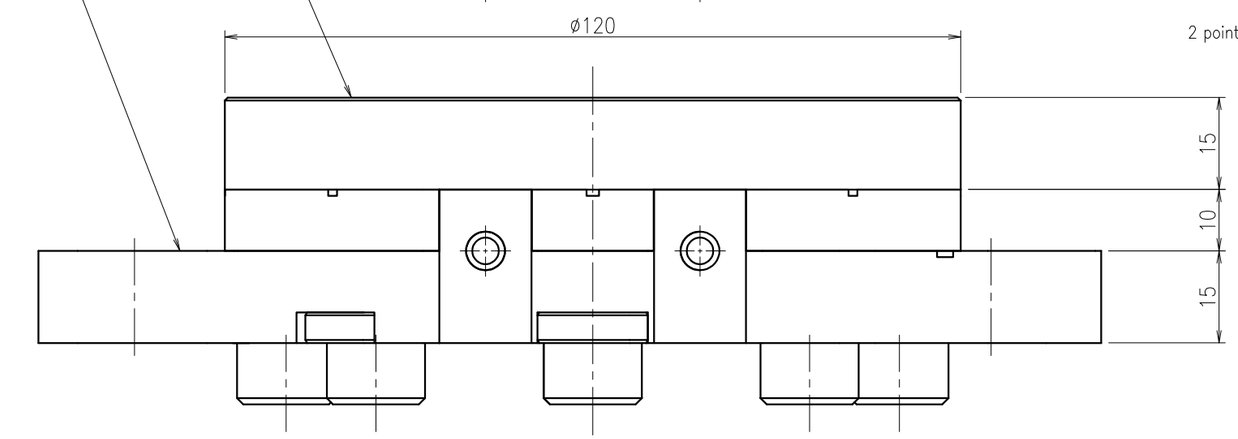

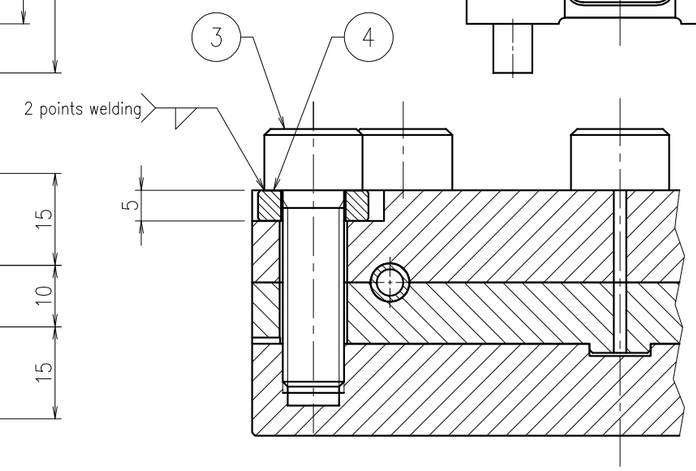

Sectional view A–A

REMARKS		APPROVED	REVIEWED	DRAWN	DATE	PBS TITLE		PROJECTION	SIZE
	QST National Institutes for Quantum and Radiological Science and Technology				2021.11.30	Diagnostics Poloidal Polarimeter			A3
					SCALE 1 : 1	DRAWING TITLE SECOND_MIRROR_ASSEMBLY(M1E9)	DRAWING NO. JADA-55342DW0100	SHEET NO. L-15	REVISION 0

No.	Name	Material	Quantity	Remarks
1	TUNGSTEN_SECOND_MIRROR	Tungsten	1	SHEET NO.L-20
2	MIRROR_MOUNT (M2E2)	SS316LN-IG, CuCrZr	1set	SHEET NO.L-25
3	HEXAGON_SOCKET_HEAD_SCREW	ALLOY625	8	M10×L32 (with ϕ2 degassing hole)
4	SQUARE_WASHER	ALLOY625	8	SHEET NO.L-45

NOTE

1. This drawing shows the assembly drawing of the second mirror (M2E2) of the LEMM.

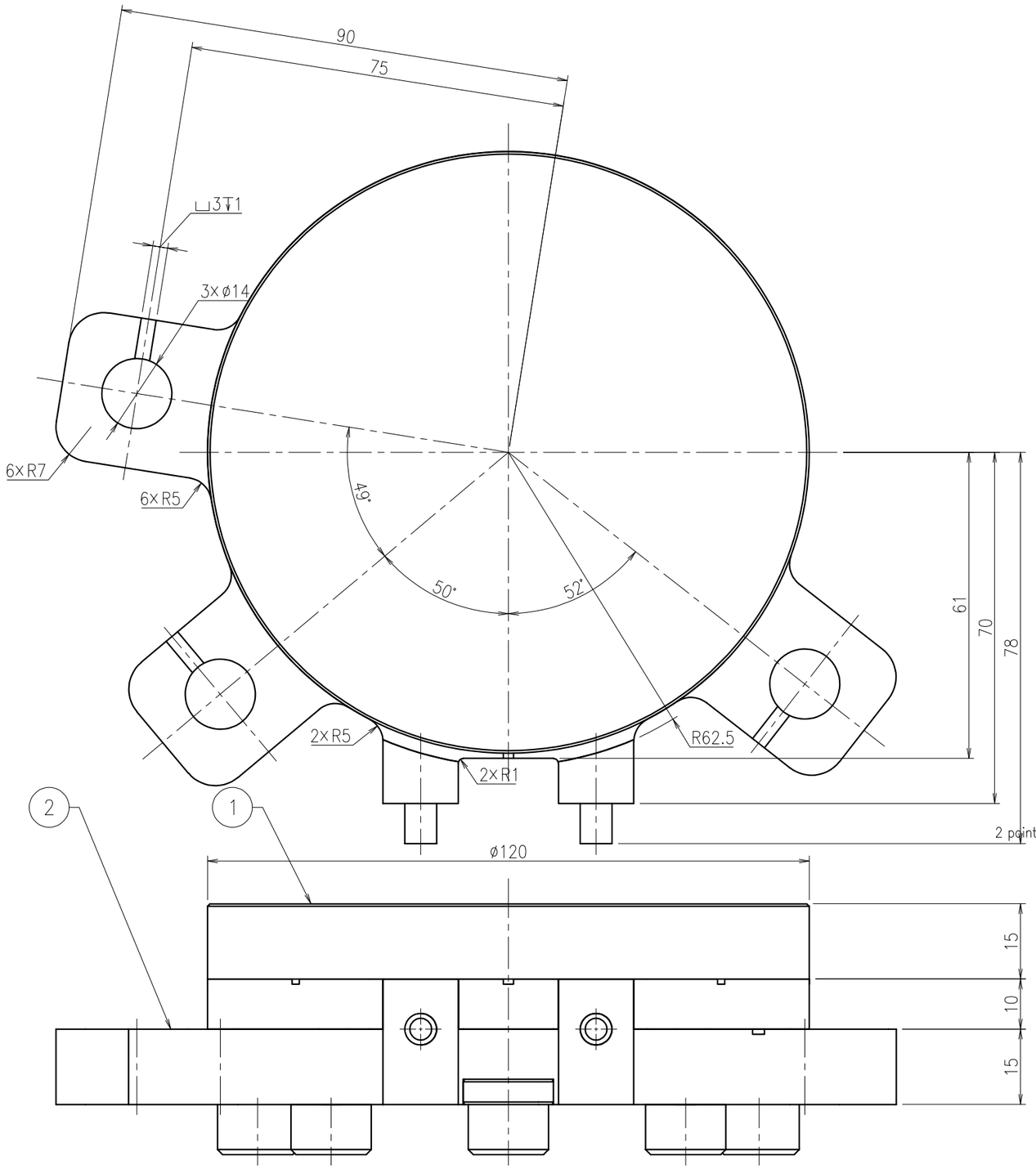

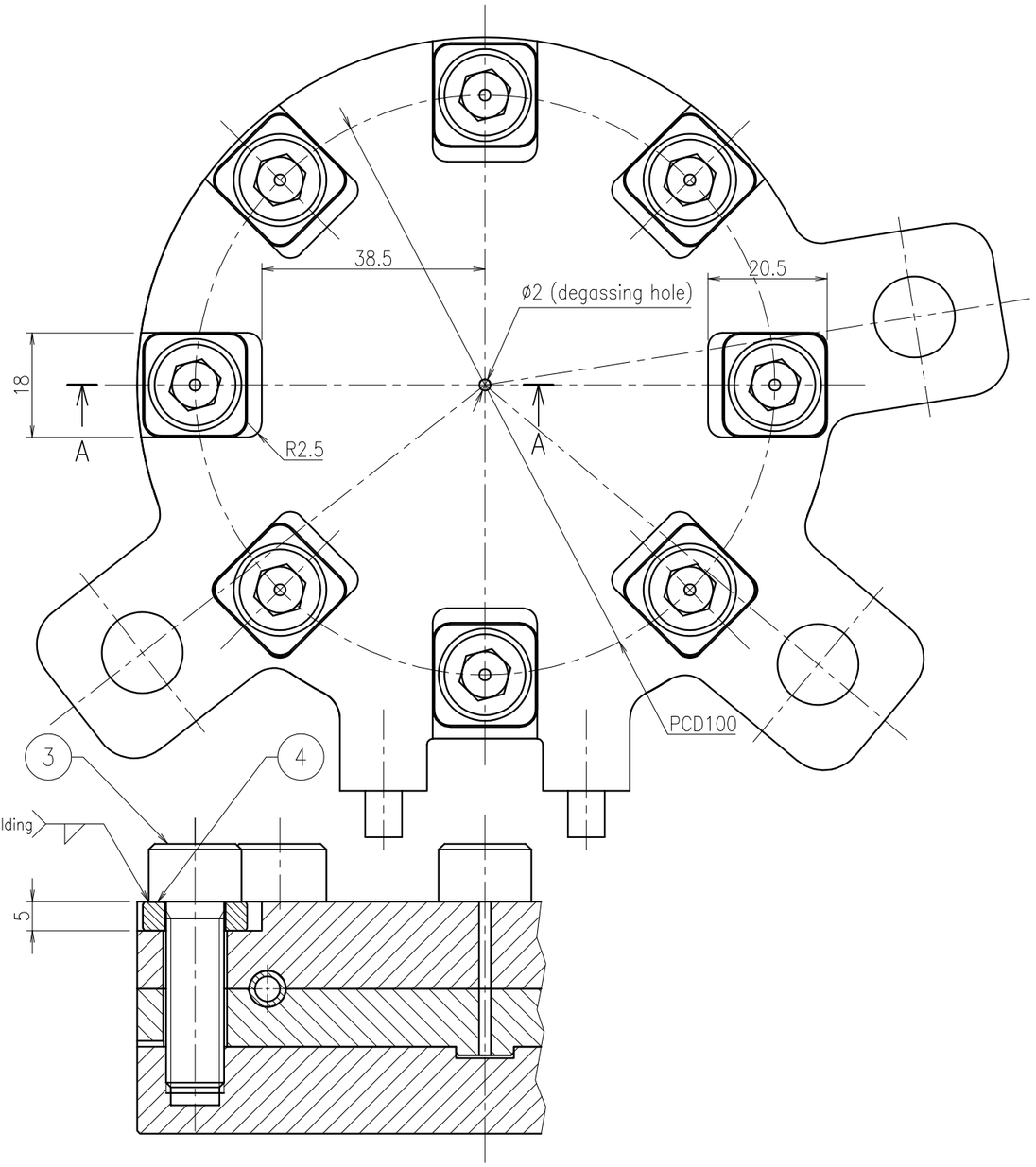

Sectional view A–A

REMARKS		APPROVED	REVIEWED	DRAWN	DATE 2021.11.30	PBS TITLE Diagnostics Poloidal Polarimeter	PROJECTION	SIZE A3
	QST National Institutes for Quantum and Radiological Science and Technology				SCALE 1 : 1	DRAWING TITLE SECOND_MIRROR_ASSEMBLY(M2E2)	DRAWING NO. JADA-55342DW0100	SHEET NO. L-16 / REVISION 0

No.	Name	Material	Quantity	Remarks
1	TUNGSTEN_SECOND_MIRROR	Tungsten	1	SHEET NO.L-20
2	MIRROR_MOUNT (M2E3)	SS316LN-IG, CuCrZr	1set	SHEET NO.L-26
3	HEXAGON_SOCKET_HEAD_SCREW	ALLOY625	8	M10×L32 (with ϕ2 degassing hole)
4	SQUARE_WASHER	ALLOY625	8	SHEET NO.L-45

NOTE

1. This drawing shows the assembly drawing of the second mirror (M2E3) of the LEMM.

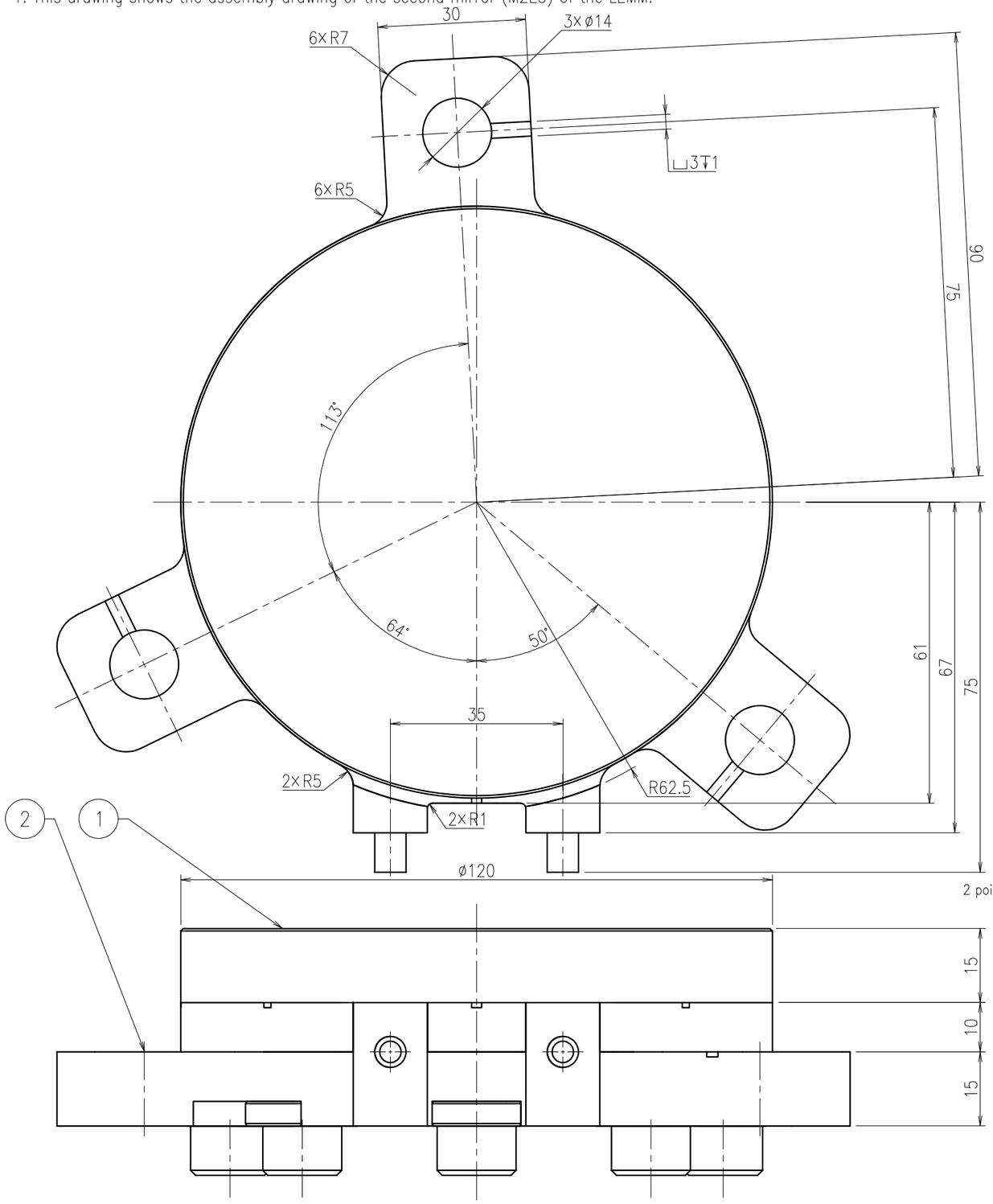

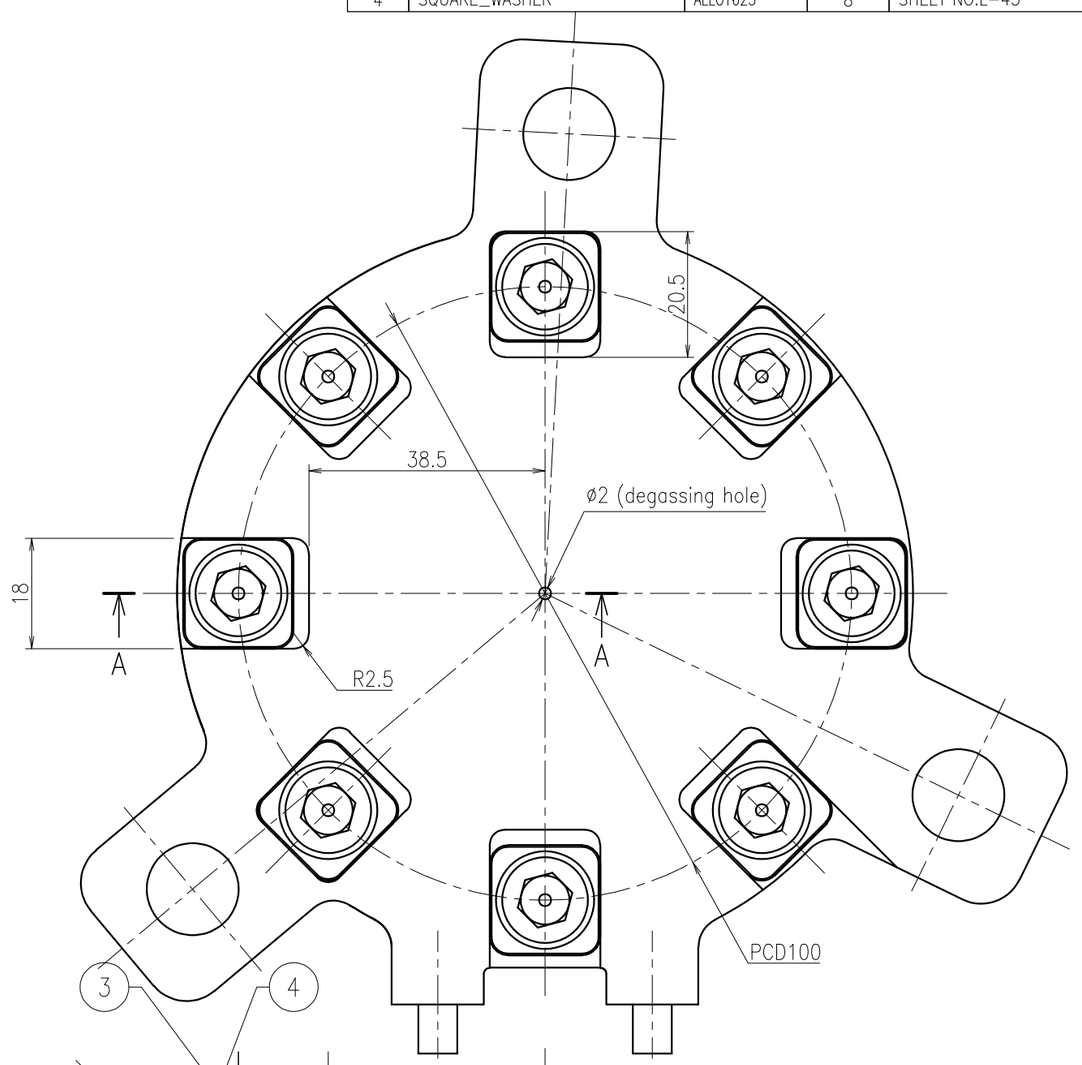

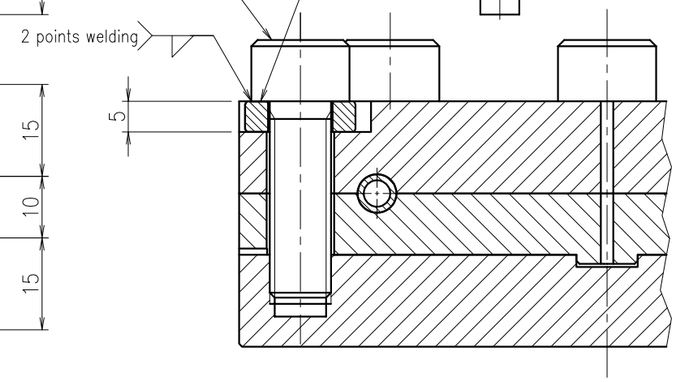

Sectional view A–A

REMARKS		APPROVED	REVIEWED	DRAWN	DATE 2021.11.30	PBS TITLE Diagnostics Poloidal Polarimeter	PROJECTION	SIZE A3
	QST National Institutes for Quantum and Radiological Science and Technology				SCALE 1 : 1	DRAWING TITLE SECOND_MIRROR_ASSEMBLY(M2E3)	DRAWING NO. JADA-55342DW0100	SHEET NO. L-17 / REVISION 0

NOTE

1. This drawing shows the assembly drawing of the second mirror (M2E4) of the LEMM.

No.	Name	Material	Quantity	Remarks
1	TUNGSTEN_SECOND_MIRROR	Tungsten	1	SHEET NO.L-20
2	MIRROR_MOUNT (M2E4)	SS316LN-IG, CuCrZr	1set	SHEET NO.L-27
3	HEXAGON_SOCKET_HEAD_SCREW	ALLOY625	8	M10×L32 (with φ2 degassing hole)
4	SQUARE_WASHER	ALLOY625	8	SHEET NO.L-45

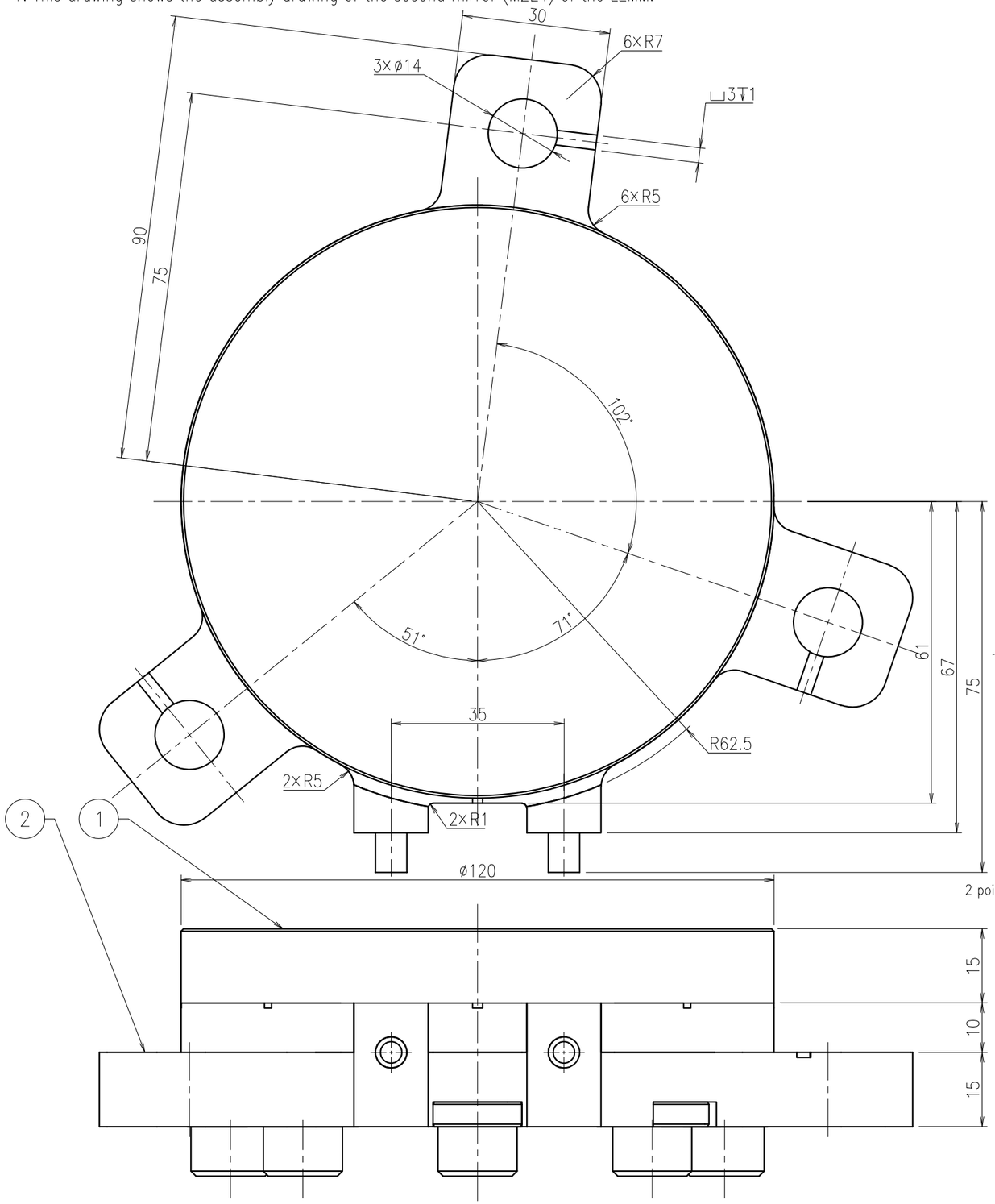

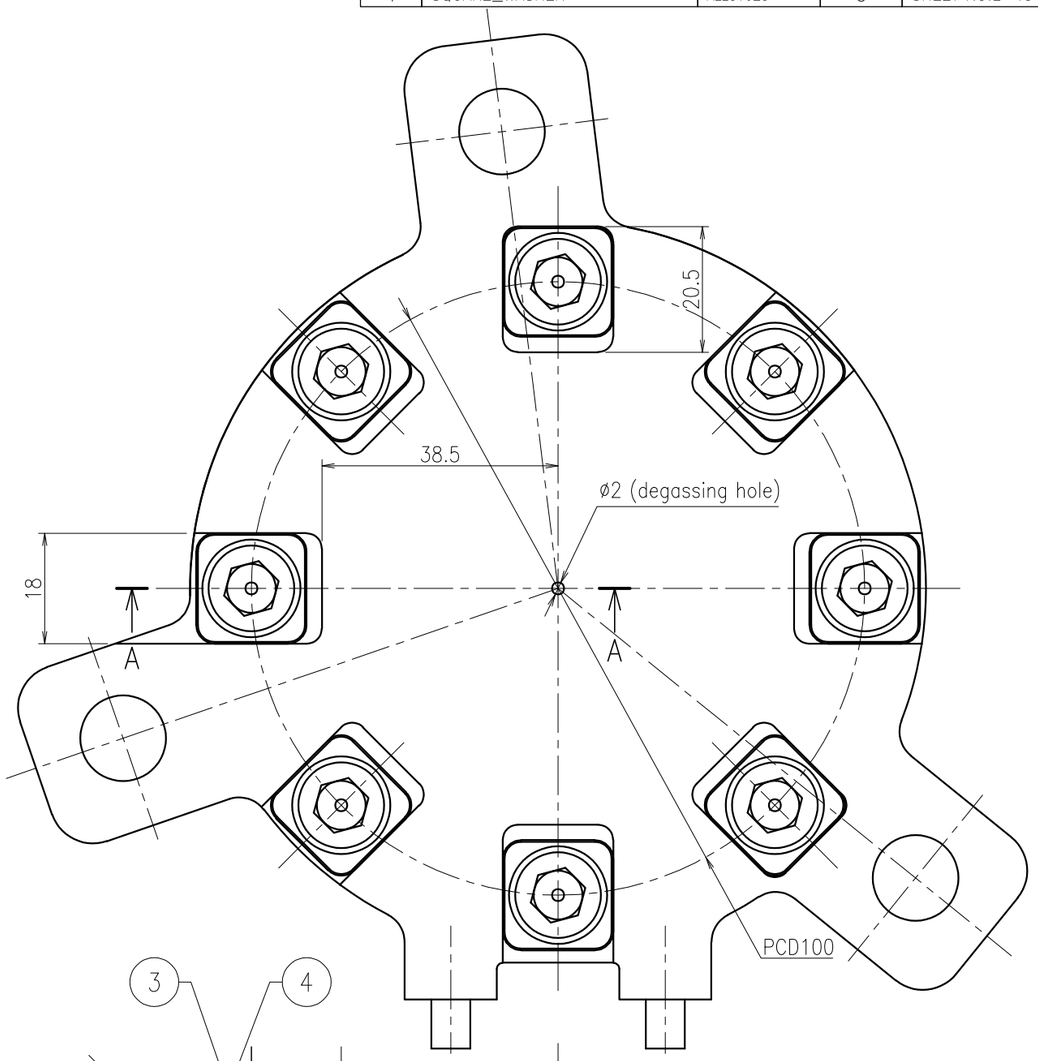

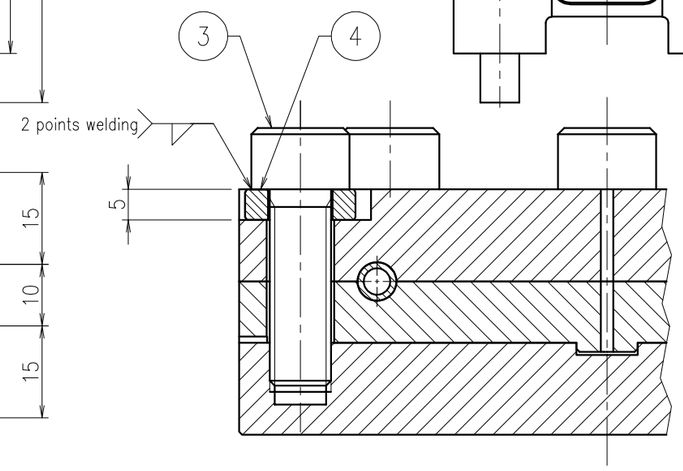

Sectional view A–A

REMARKS		APPROVED	REVIEWED	DRAWN	DATE 2021.11.30	PBS TITLE Diagnostics Poloidal Polarimeter	PROJECTION	SIZE A3
	QST National Institutes for Quantum and Radiological Science and Technology				SCALE 1 : 1	DRAWING TITLE SECOND_MIRROR_ASSEMBLY(M2E4)	DRAWING NO. JADA-55342DW0100	SHEET NO. L-18 / REVISION 0

No.	Name	Material	Quantity	Remarks
1	TUNGSTEN_SECOND_MIRROR	Tungsten	1	SHEET NO.L-20
2	MIRROR_MOUNT (M2E9)	SS316LN-IG, CuCrZr	1set	SHEET NO.L-28
3	HEXAGON_SOCKET_HEAD_SCREW	ALLOY625	8	M10×L32 (with φ2 degassing hole)
4	SQUARE_WASHER	ALLOY625	8	SHEET NO.L-45

NOTE

1. This drawing shows the assembly drawing of the second mirror (M2E9) of the LEMM.

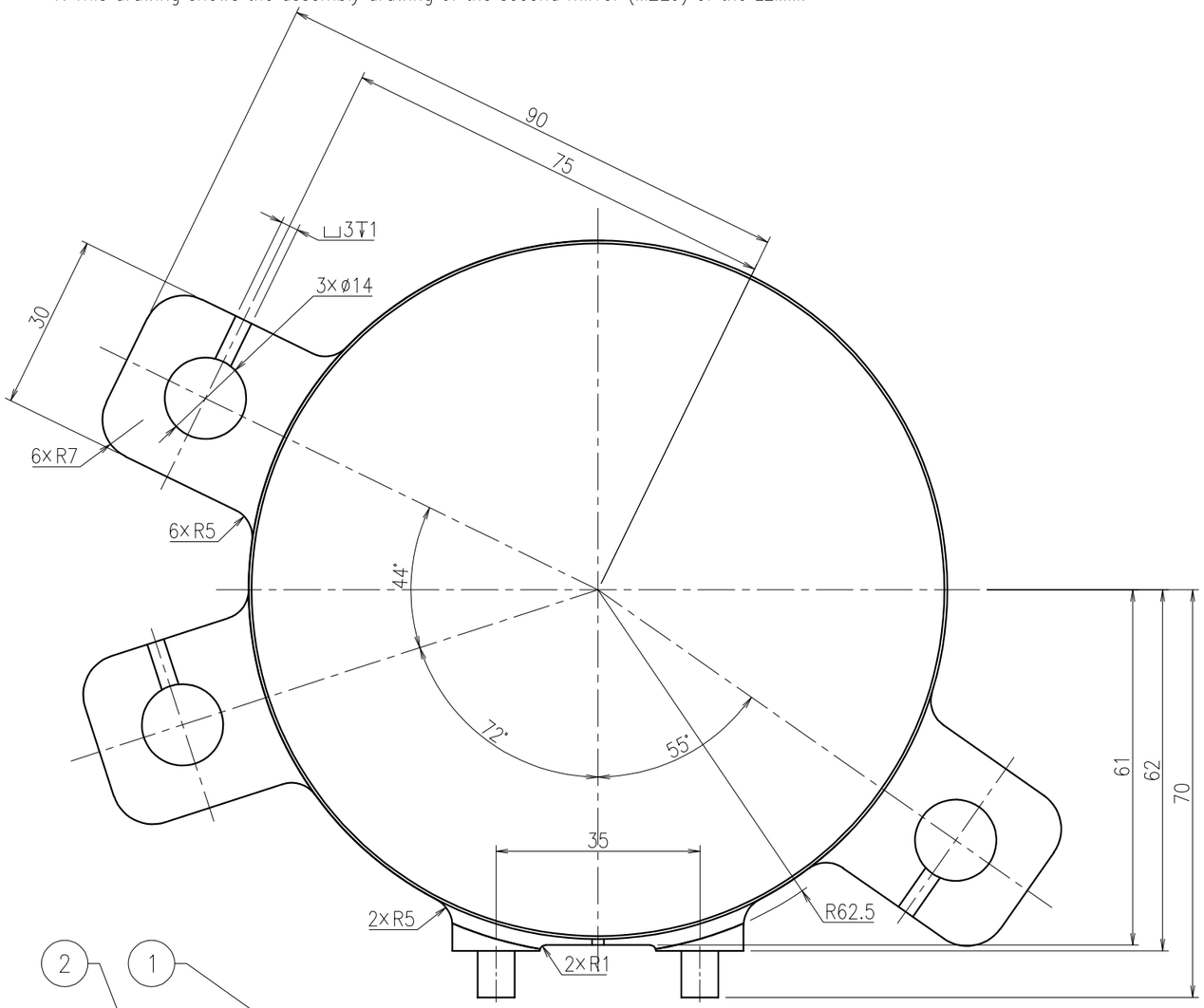

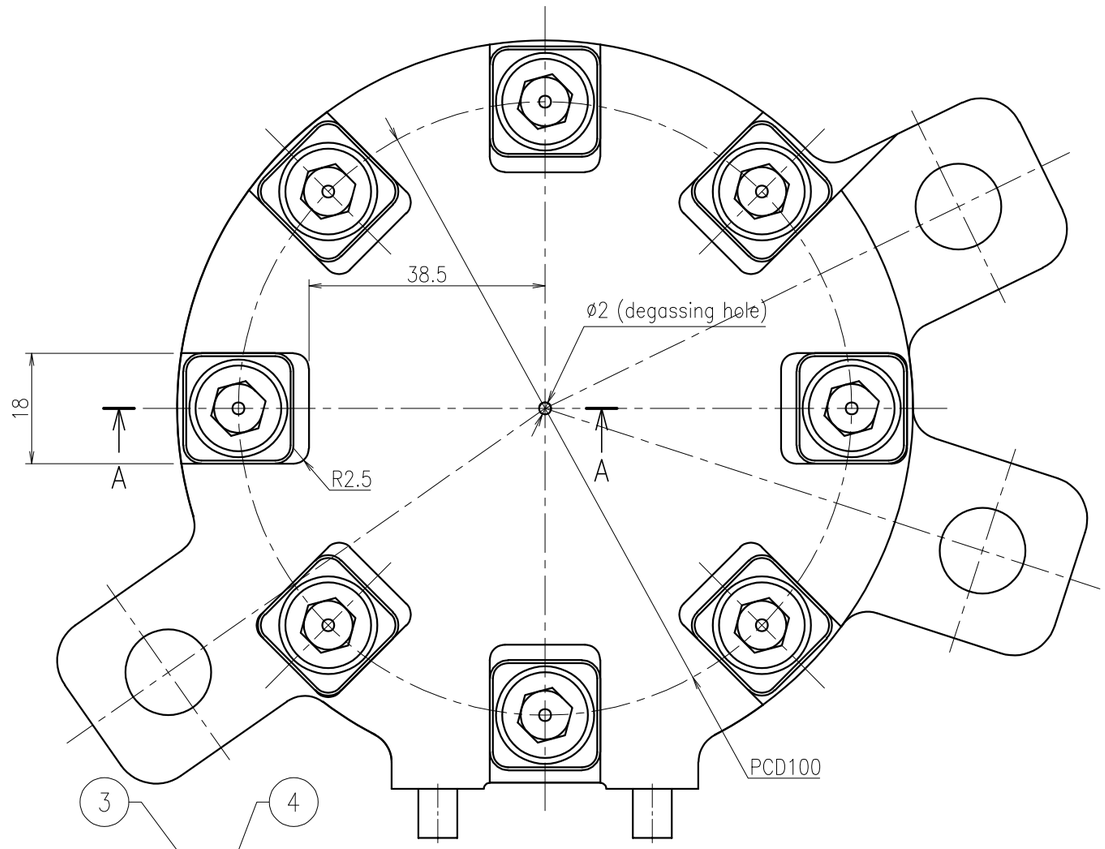

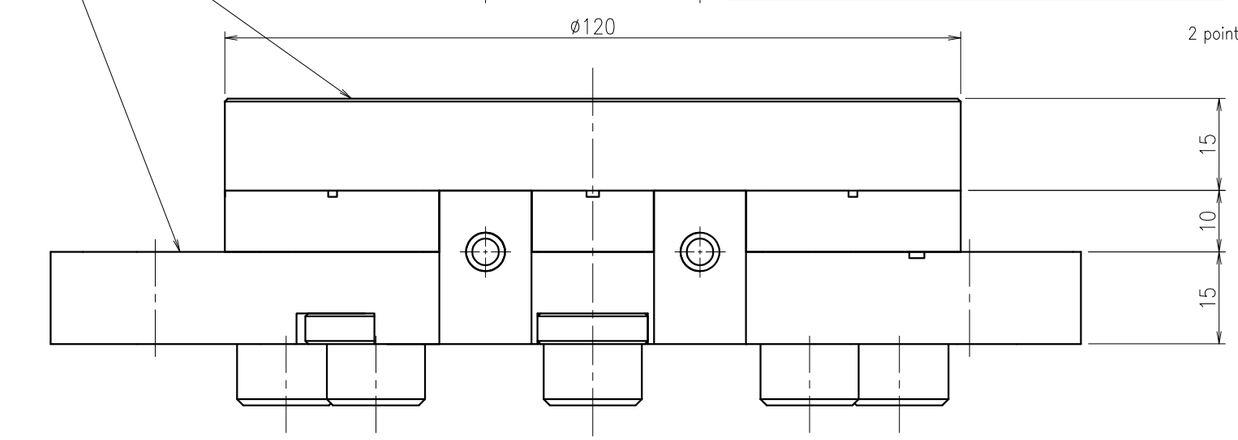

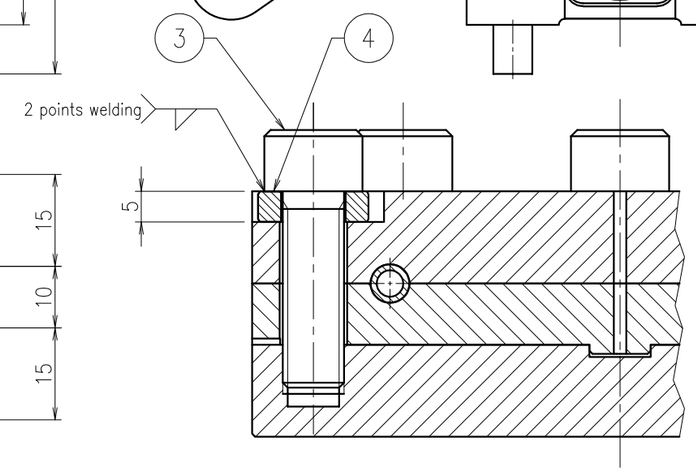

Sectional view A–A

REMARKS		APPROVED	REVIEWED	DRAWN	DATE	PBS TITLE		PROJECTION	SIZE
	QST National Institutes for Quantum and Radiological Science and Technology				2021.11.30	Diagnostics Poloidal Polarimeter			A3
					SCALE 1 : 1	DRAWING TITLE SECOND_MIRROR_ASSEMBLY(M2E9)	DRAWING NO. JADA-55342DW0100	SHEET NO. L-19	REVISION 0

Name	Material	Quantity	Remarks
TUNGSTEN_FIRST_MIRROR	Tungsten	4	
TUNGSTEN_SECOND_MIRROR	Tungsten	4	

General Tolerance : ISO 2768 m-K
Surface roughness not indicated : Ra3.2

NOTE
1. The ridges and corners should be chamfered(about C0.2), and there should be no burrs.
2. Minimize the chamfer dimensions of the screw hole edges.
3. After processing, perform degreasing cleaning.
4. The mirror surface is finished by polishing.
5. The mirror surface after polishing is protected by a special sheet.

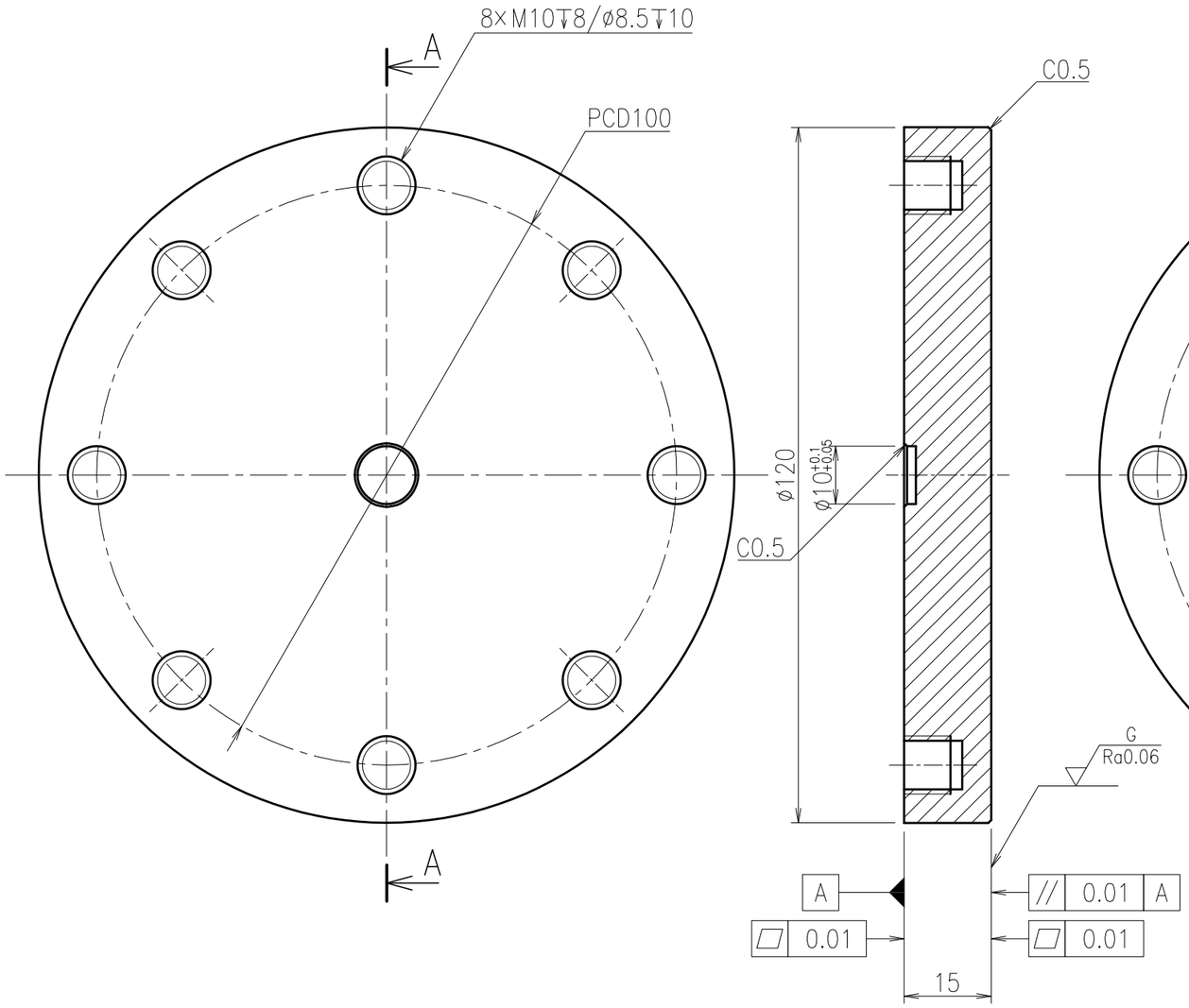

Sectional view A–A

TUNGSTEN_FIRST_MIRROR

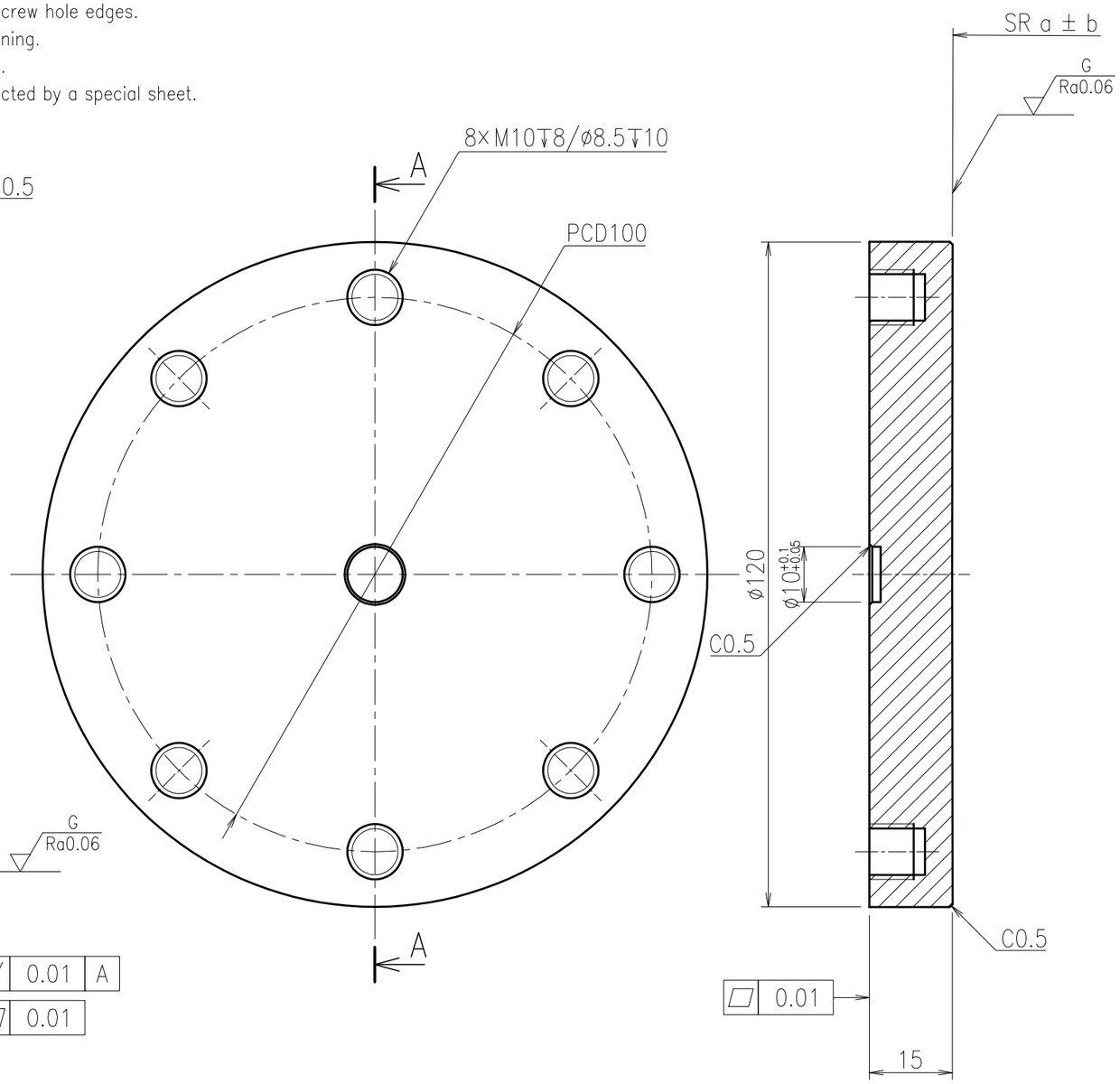

Sectional view A–A

TUNGSTEN_SECOND_MIRROR

Mirror_number	a	b
M2E2	21000	1050
M2E3	21000	1050
M2E4	21000	1050
M2E9	25000	1250

REMARKS		APPROVED	REVIEWED	DRAWN	DATE	PBS TITLE	PROJECTION	SIZE
	QST National Institutes for Quantum and Radiological Science and Technology				2021.11.30	Diagnostics Poloidal Polarimeter		A3
					SCALE 1 : 1	DRAWING TITLE TUNGSTEN_MIRROR	DRAWING NO. JADA-55342DW0100	SHEET NO. L-20 / REVISION 0

General Tolerance : ISO 2768 m-K
Surface roughness not indicated : Ra6.3

NOTE
1. This drawing shows a machining drawing of a member molded by the hot isostatic pressing method.
2. The ridges and corners should be chamfered(about C0.2), and there should be no burrs.
3. After processing, perform degreasing cleaning.
4. SHEET NO.L-47 shows the assembly of parts before processing by the hot isostatic pressing method.

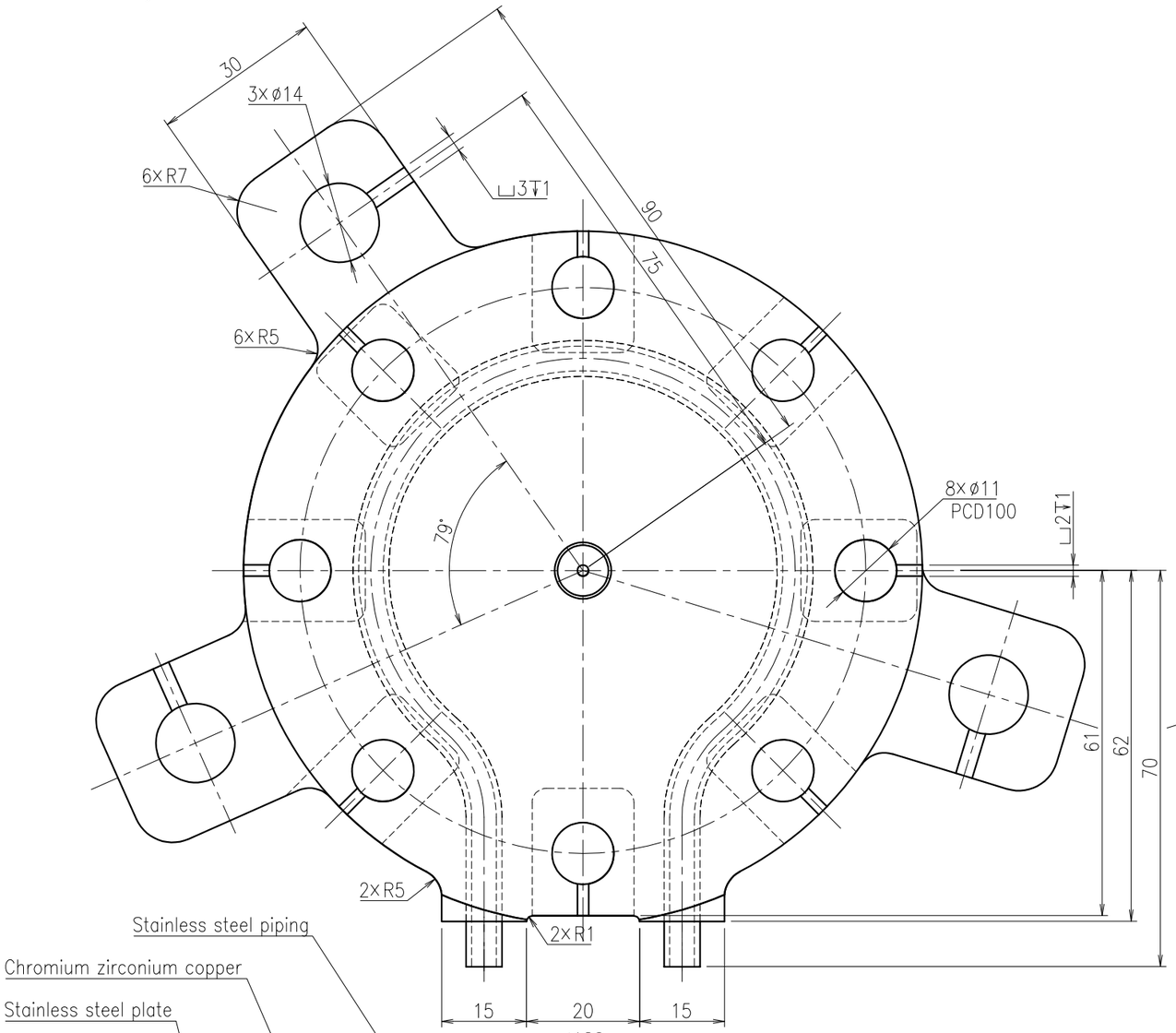

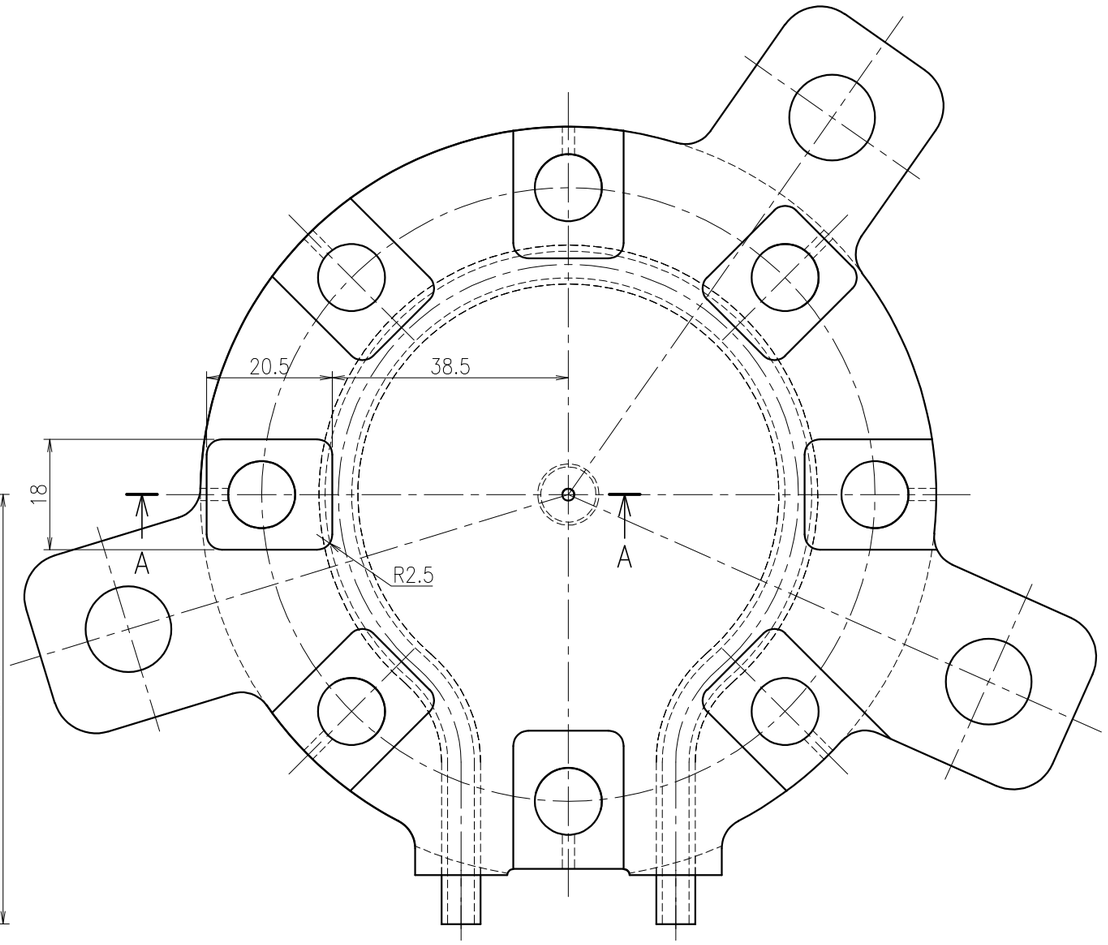

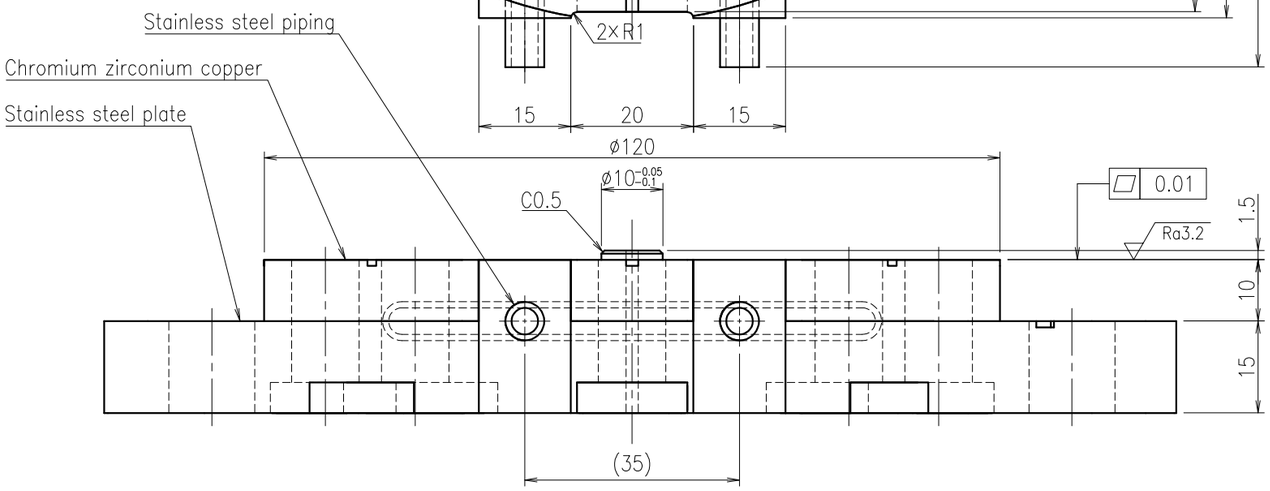

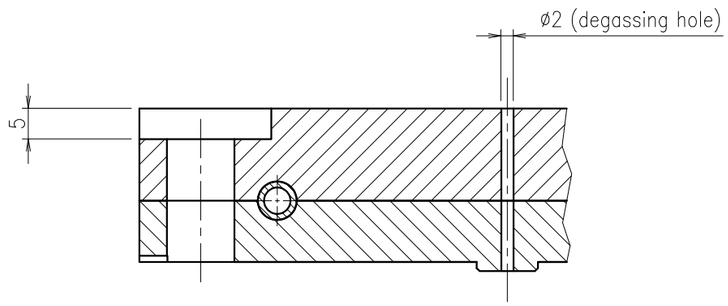

Sectional view A-A

REMARKS	QST National Institutes for Quantum and Radiological Science and Technology	APPROVED	REVIEWED	DRAWN	DATE 2021.11.30	PBS TITLE Diagnostics Poloidal Polarimeter	PROJECTION	SIZE A3
					SCALE 1 : 1	DRAWING TITLE MIRROR_MOUNT (M1E2)	DRAWING NO. JADA-55342DW0100	SHEET NO. L-21 / REVISION 0

General Tolerance : ISO 2768 m-K
Surface roughness not indicated : Ra6.3

NOTE
1. This drawing shows a machining drawing of a member molded by the hot isostatic pressing method.
2. The ridges and corners should be chamfered(about C0.2), and there should be no burrs.
3. After processing, perform degreasing cleaning.
4. SHEET NO.L-47 shows the assembly of parts before processing by the hot isostatic pressing method.

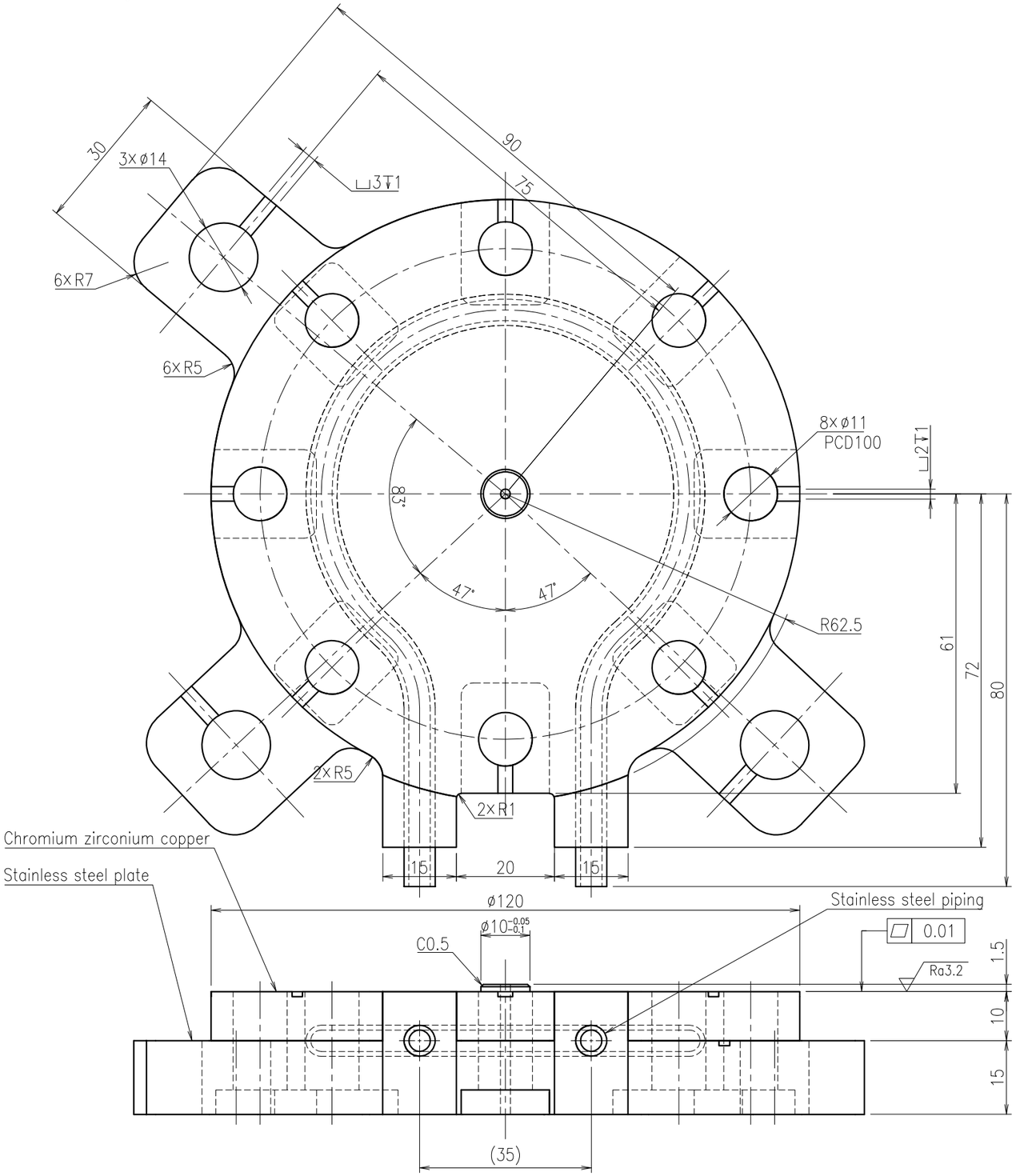

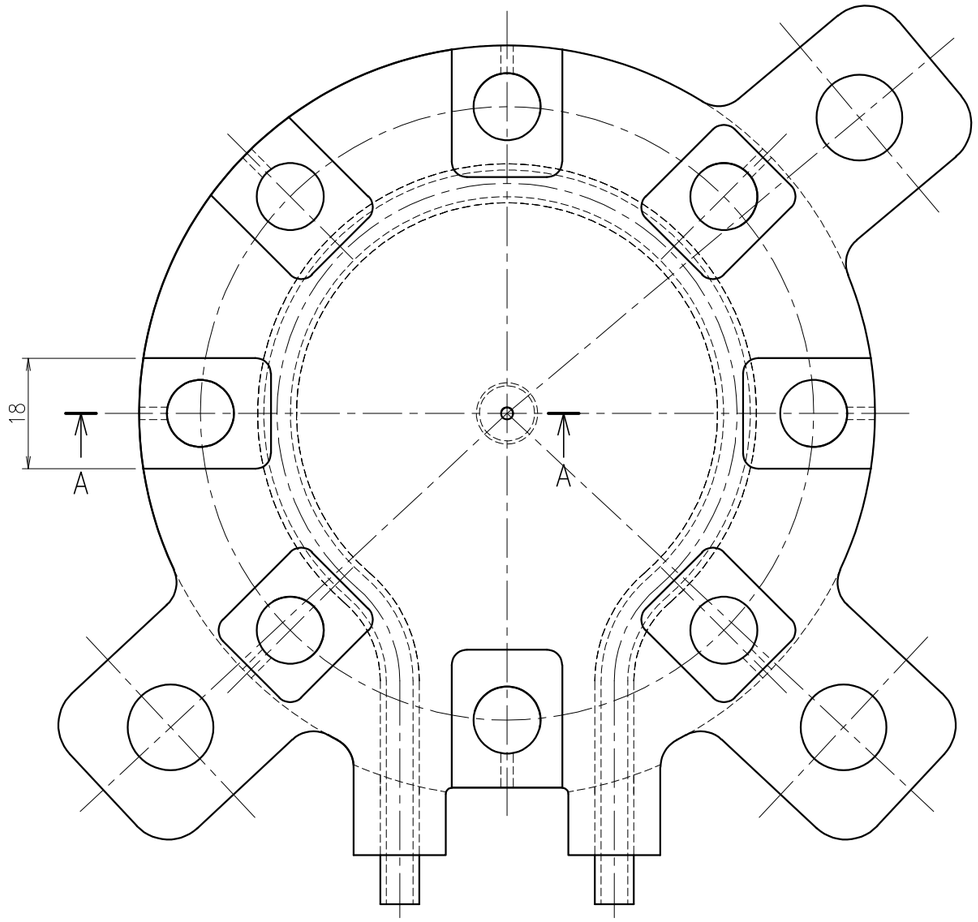

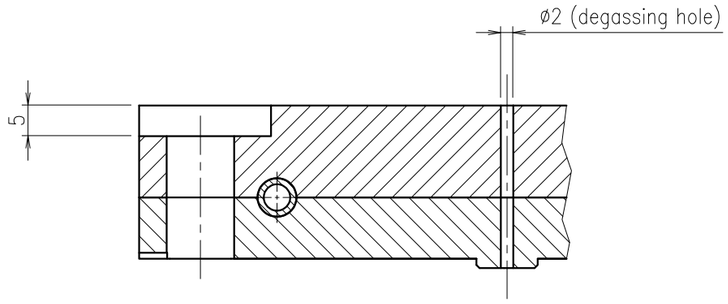

Sectional view A-A

REMARKS		APPROVED	REVIEWED	DRAWN	DATE	PBS TITLE	PROJECTION	SIZE
	QST National Institutes for Quantum and Radiological Science and Technology				2021.11.30	Diagnostics Poloidal Polarimeter		A3
					SCALE 1 : 1	DRAWING TITLE MIRROR_MOUNT (M1E3)	DRAWING NO. JADA-55342DW0100	SHEET NO. L-22 / REVISION 0

IO APPROVED BY : VAYAKIS G. DATE : 18 MAR 2022 INTENDED USAGE : FOR TENDER

General Tolerance : ISO 2768 m-K
Surface roughness not indicated : Ra6.3

NOTE
1. This drawing shows a machining drawing of a member molded by the hot isostatic pressing method.
2. The ridges and corners should be chamfered(about C0.2), and there should be no burrs.
3. After processing, perform degreasing cleaning.
4. SHEET NO.L-47 shows the assembly of parts before processing by the hot isostatic pressing method.

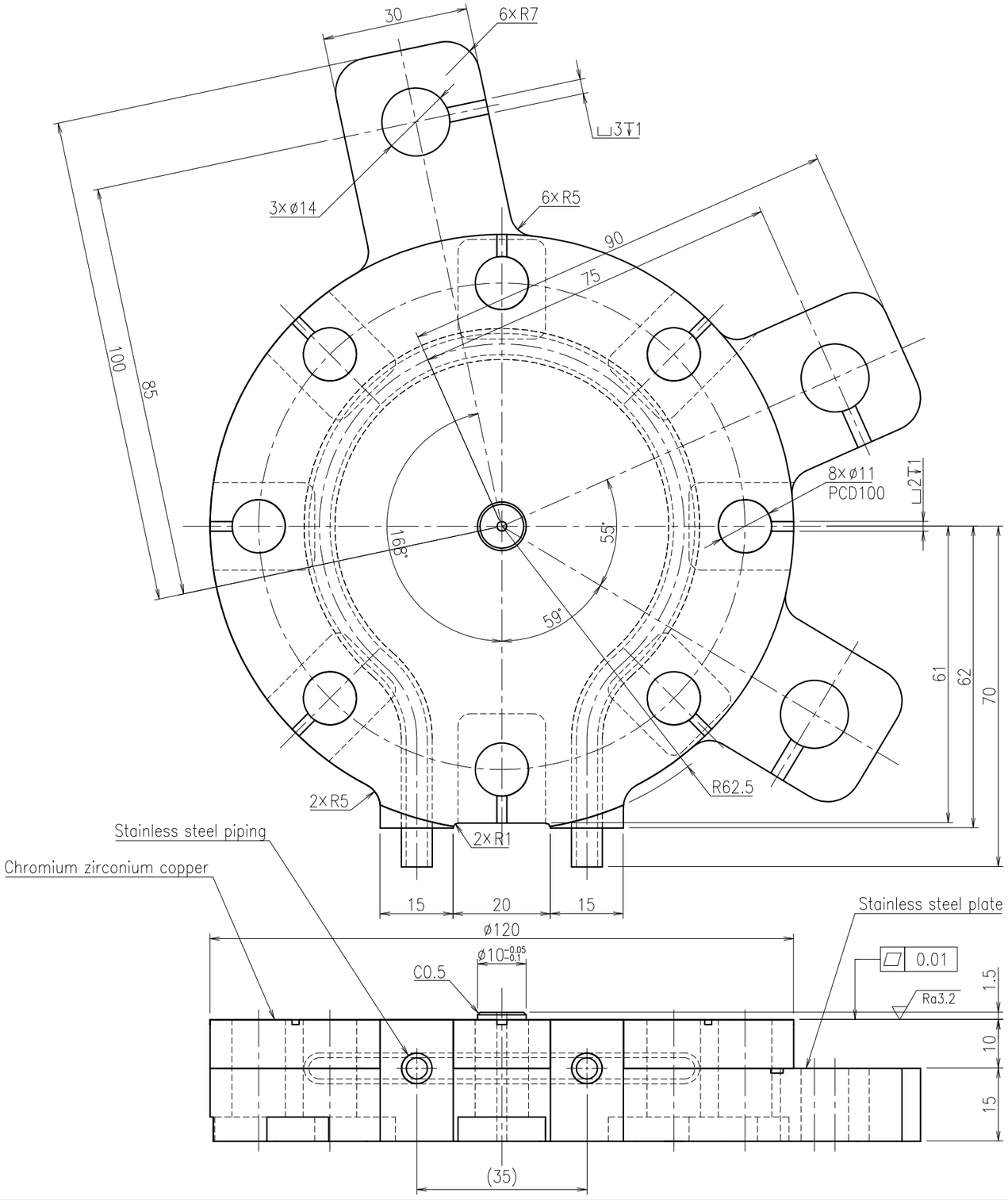

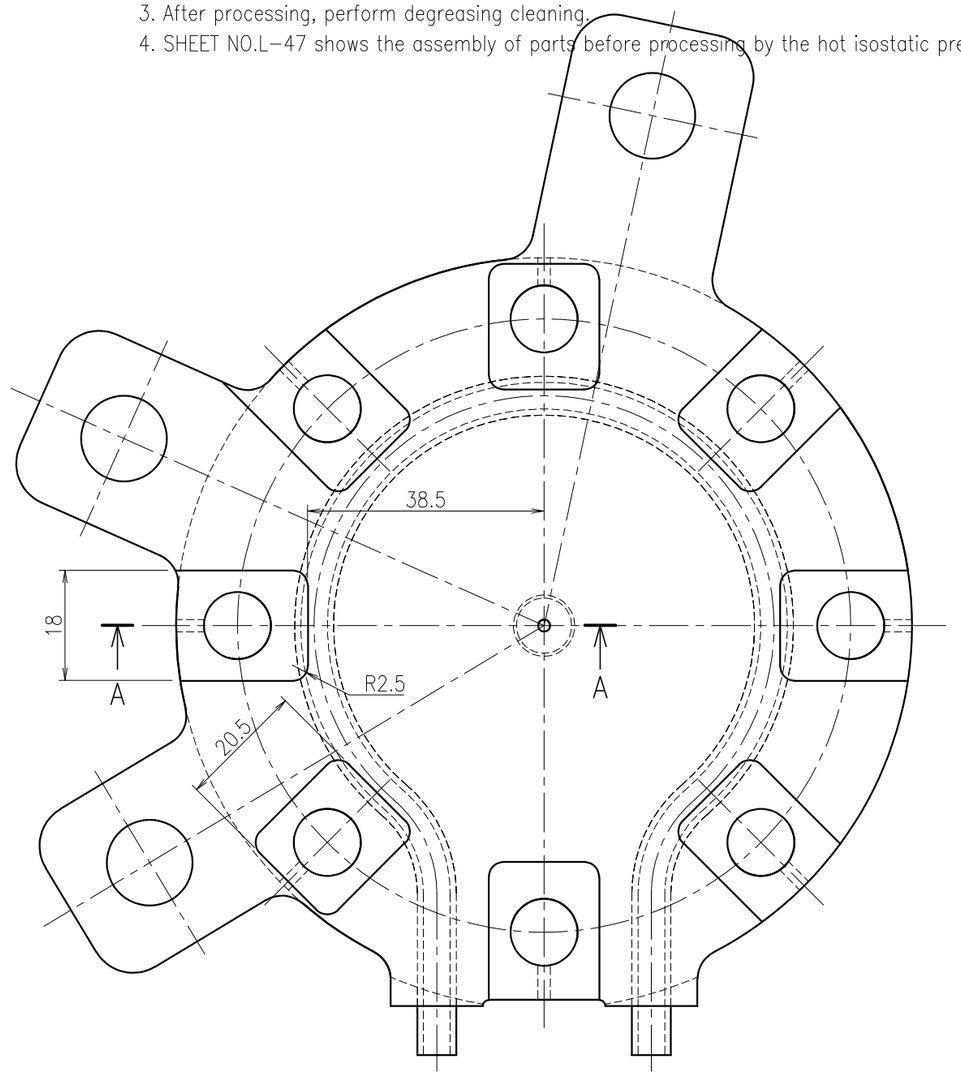

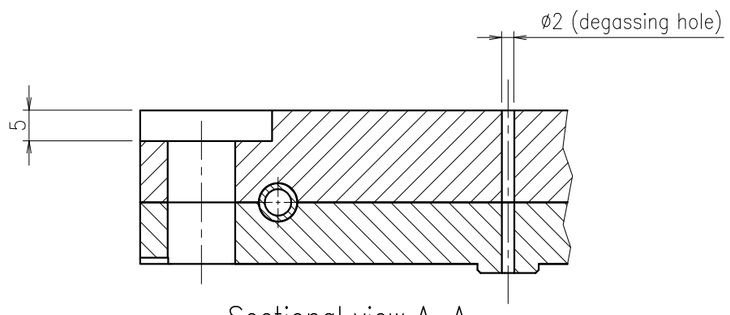

Sectional view A–A

REMARKS		APPROVED	REVIEWED	DRAWN	DATE 2021.11.30	PBS TITLE Diagnostics Poloidal Polarimeter	PROJECTION	SIZE A3
	QST National Institutes for Quantum and Radiological Science and Technology				SCALE 1 : 1	DRAWING TITLE MIRROR_MOUNT (M1E4)	DRAWING NO. JADA-55342DW0100	SHEET NO. L-23 / REVISION 0

IO APPROVED BY : VAYAKIS G. DATE : 18 MAR 2022 INTENDED USAGE : FOR TENDER

General Tolerance : ISO 2768 m-K
Surface roughness not indicated : Ra6.3

NOTE
1. This drawing shows a machining drawing of a member molded by the hot isostatic pressing method.
2. The ridges and corners should be chamfered(about C0.2), and there should be no burrs.
3. After processing, perform degreasing cleaning.
4. SHEET NO.L-47 shows the assembly of parts before processing by the hot isostatic pressing method.

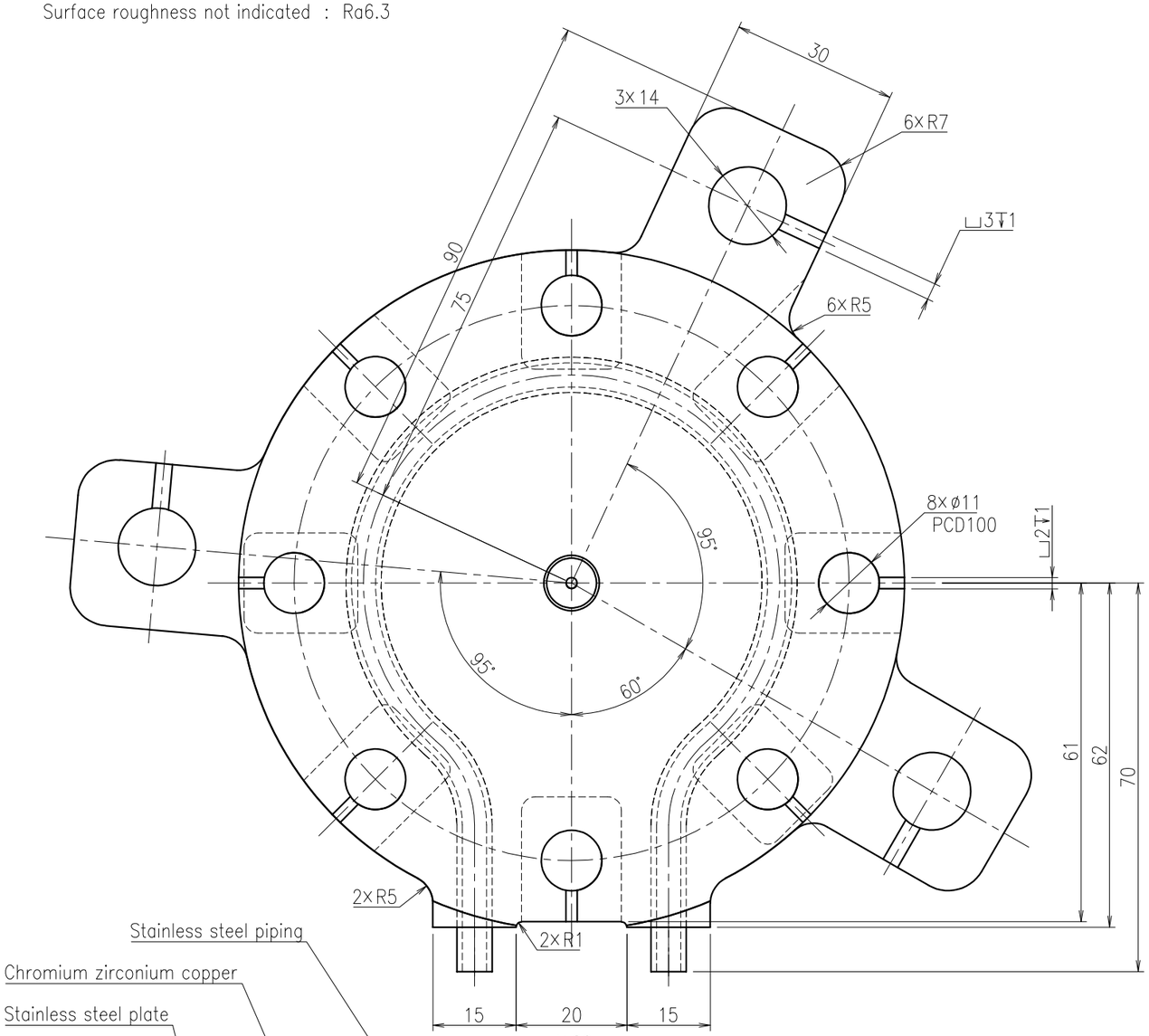

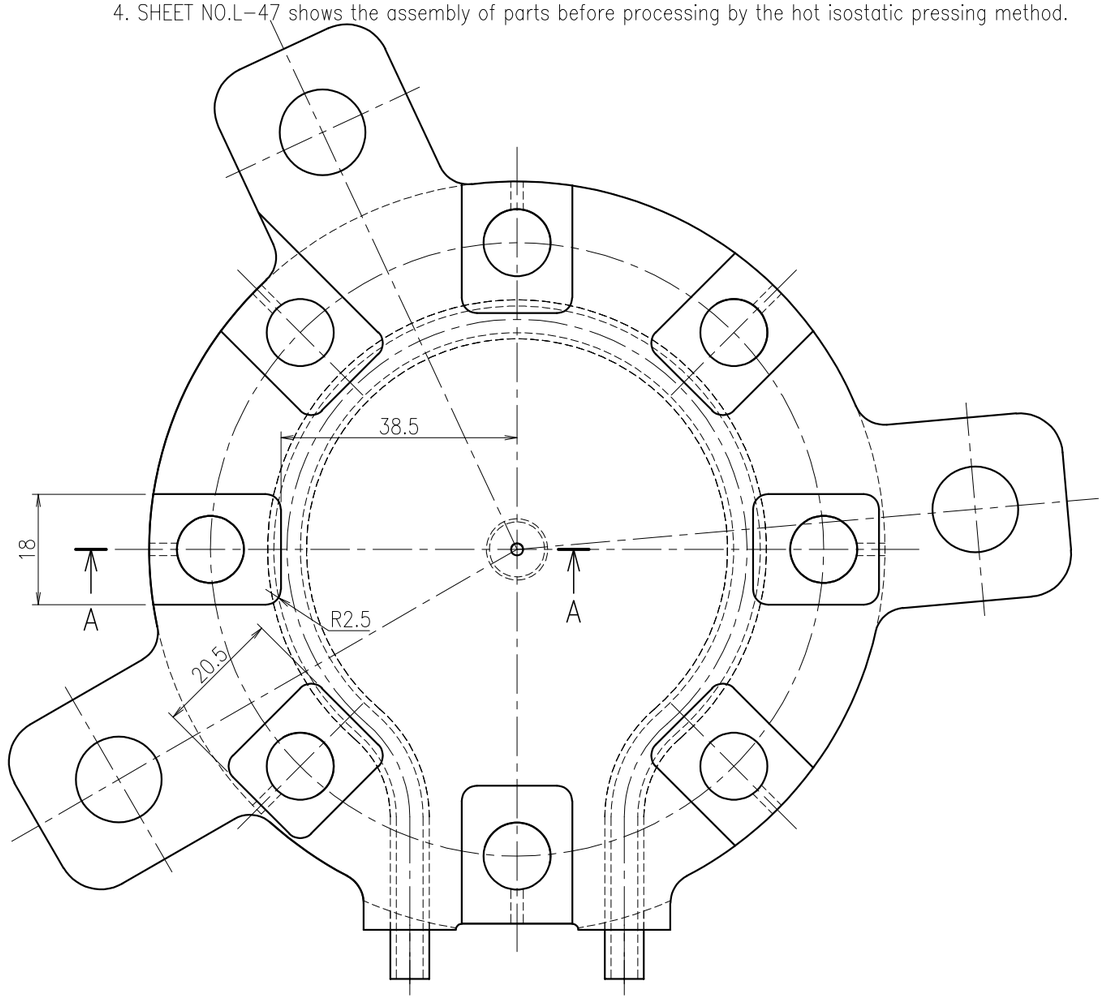

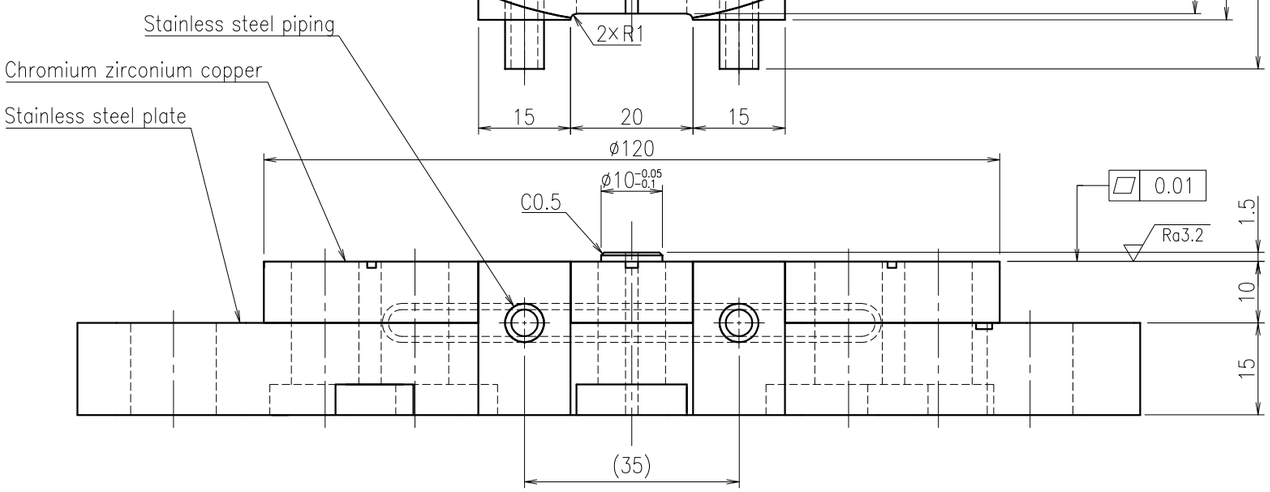

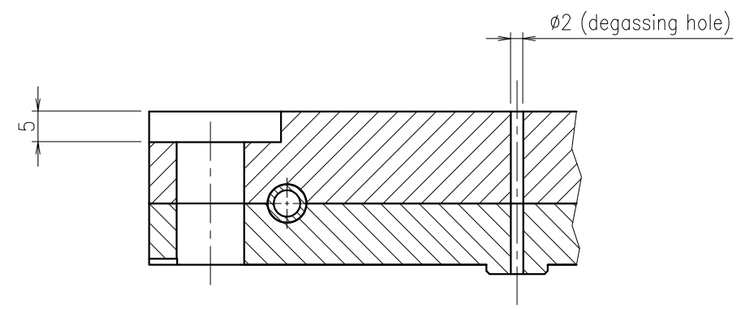

Sectional view A-A

REMARKS		APPROVED	REVIEWED	DRAWN	DATE	PBS TITLE		PROJECTION	SIZE
	QST National Institutes for Quantum and Radiological Science and Technology				2021.11.30	Diagnostics Poloidal Polarimeter			A3
					SCALE 1 : 1	DRAWING TITLE MIRROR_MOUNT (M1E9)	DRAWING NO. JADA-55342DW0100	SHEET NO. L-24	REVISION 0

IO APPROVED BY : VAYAKIS G. DATE : 18 MAR 2022 INTENDED USAGE : FOR TENDER

General Tolerance : ISO 2768 m-K
Surface roughness not indicated : Ra6.3

NOTE
1. This drawing shows a machining drawing of a member molded by the hot isostatic pressing method.
2. The ridges and corners should be chamfered(about C0.2), and there should be no burrs.
3. After processing, perform degreasing cleaning.
4. SHEET NO.L-47 shows the assembly of parts before processing by the hot isostatic pressing method.

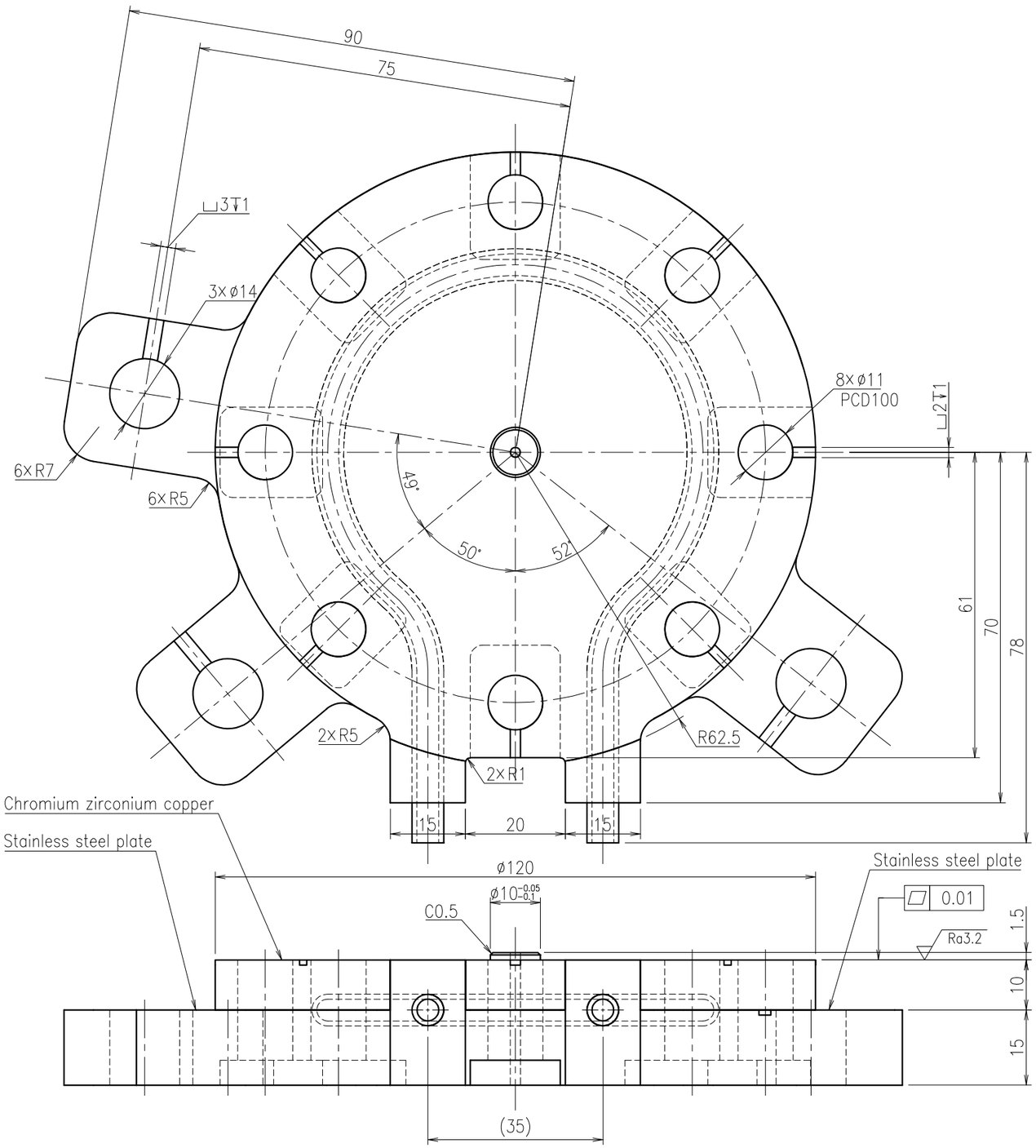

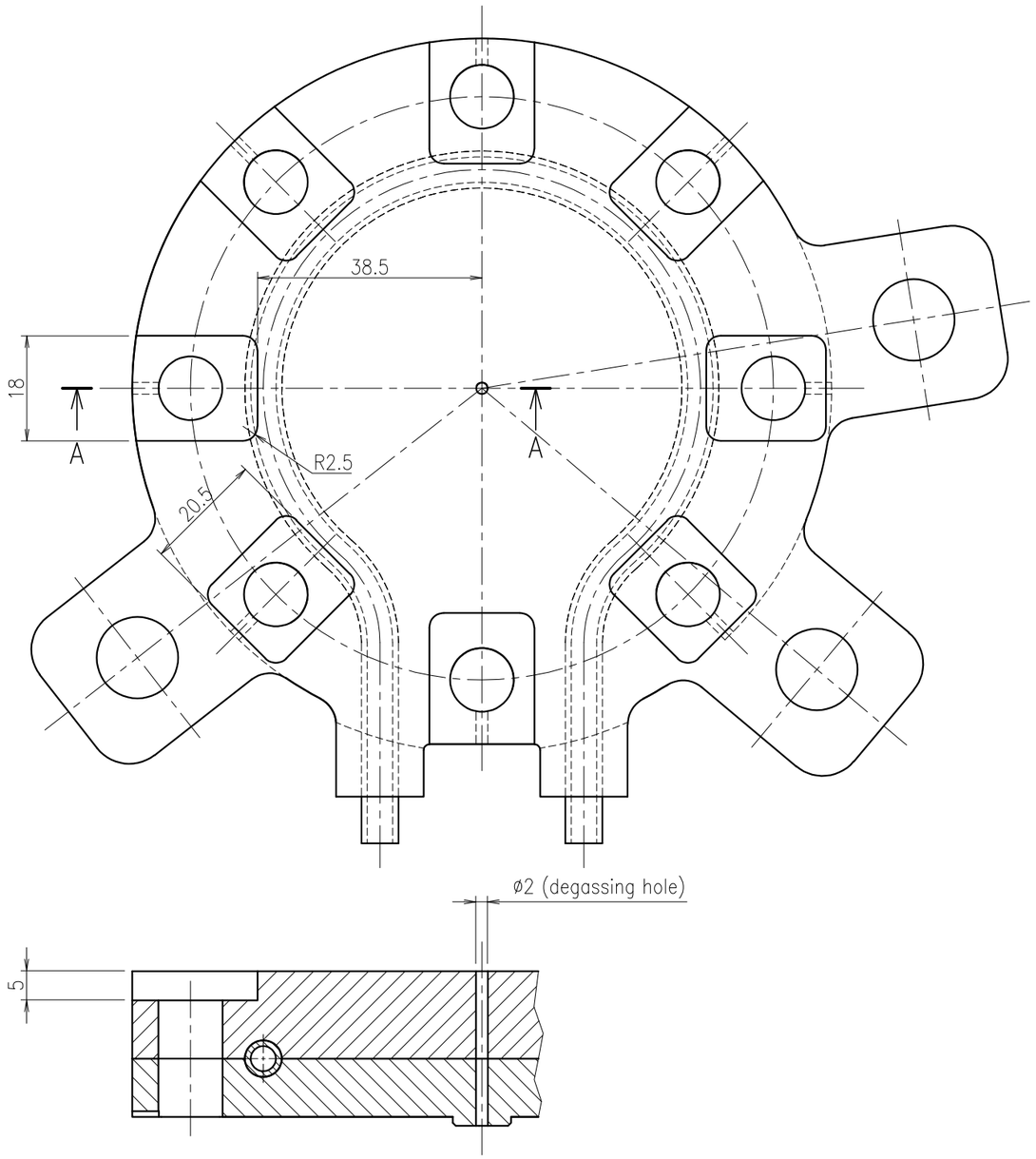

Sectional view A-A

REMARKS		APPROVED	REVIEWED	DRAWN	DATE 2021.11.30	PBS TITLE Diagnostics Poloidal Polarimeter	PROJECTION	SIZE A3
	QST National Institutes for Quantum and Radiological Science and Technology				SCALE 1 : 1	DRAWING TITLE MIRROR_MOUNT (M2E2)	DRAWING NO. JADA-55342DW0100	SHEET NO. L-25 / REVISION 0

General Tolerance : ISO 2768 m-K
Surface roughness not indicated : Ra6.3

NOTE
1. This drawing shows a machining drawing of a member molded by the hot isostatic pressing method.
2. The ridges and corners should be chamfered(about C0.2), and there should be no burrs.
3. After processing, perform degreasing cleaning.
4. SHEET NO.L-47 shows the assembly of parts before processing by the hot isostatic pressing method.

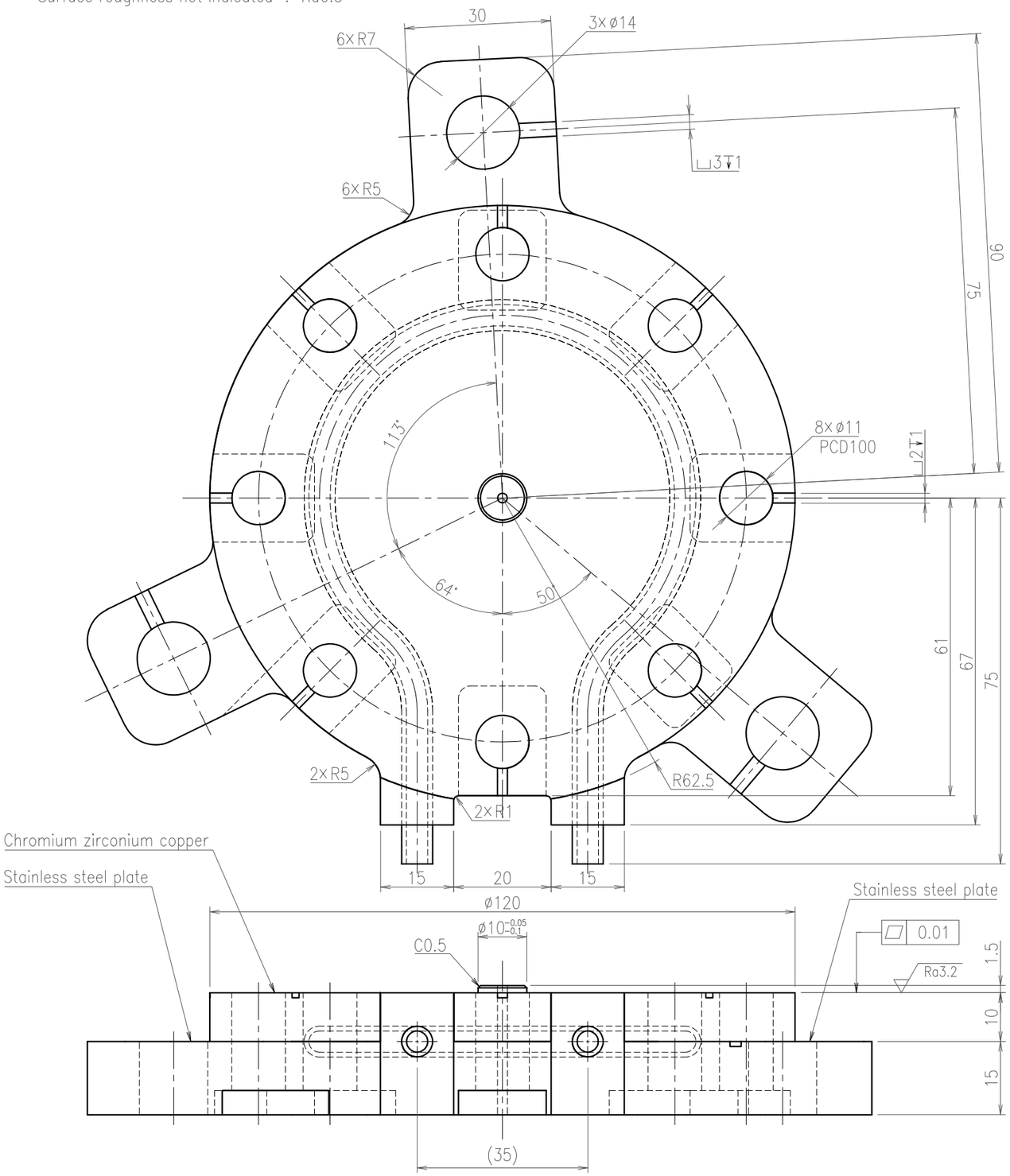

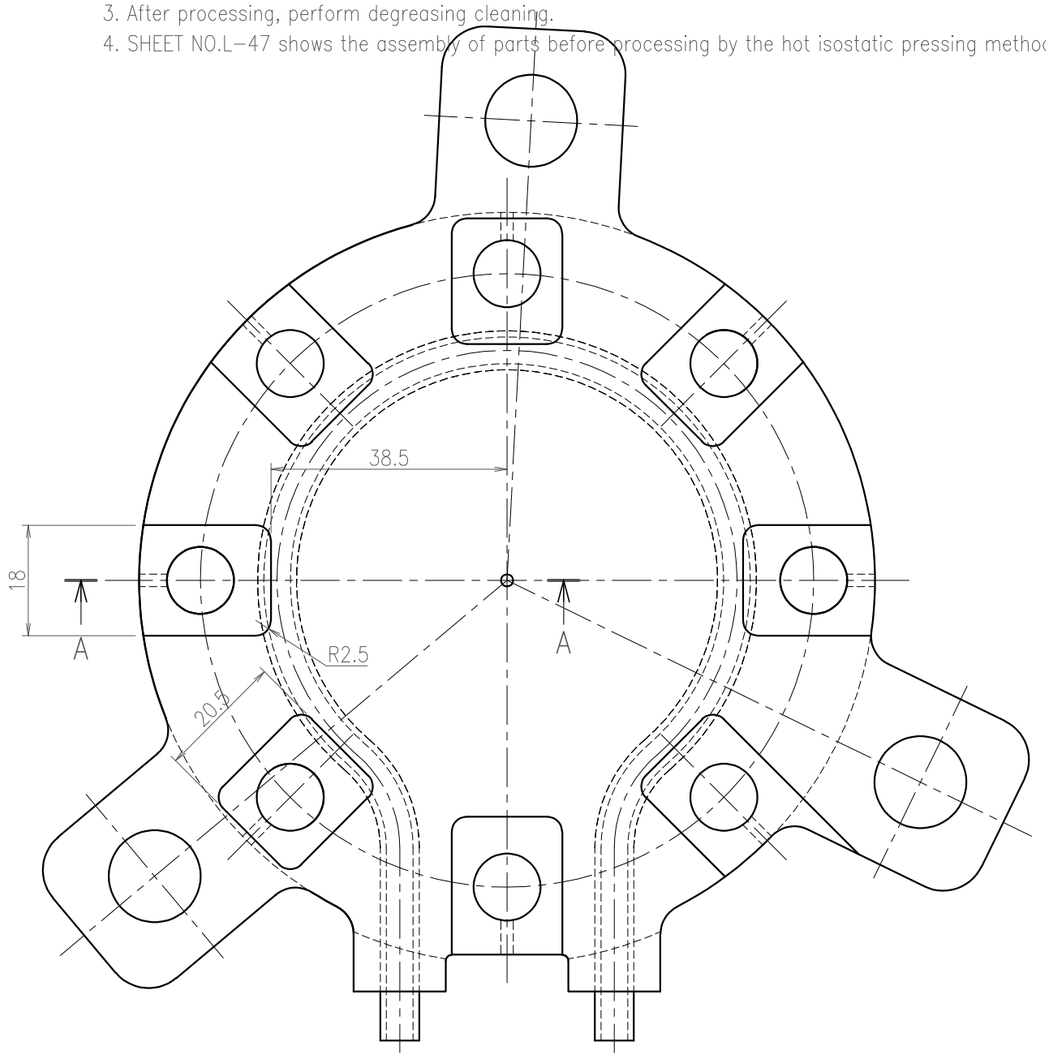

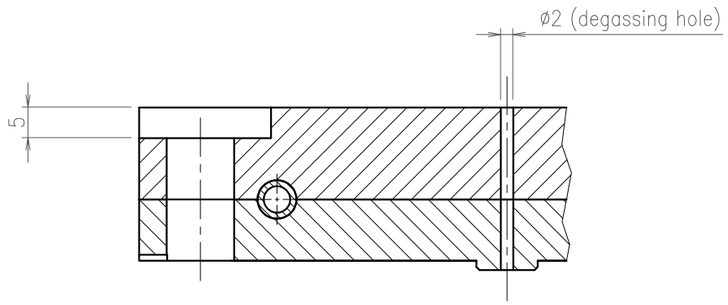

Sectional view A-A

REMARKS		APPROVED	REVIEWED	DRAWN	DATE	PBS TITLE	PROJECTION	SIZE
	QST National Institutes for Quantum and Radiological Science and Technology				2021.11.30	Diagnostics Poloidal Polarimeter		A3
					SCALE 1 : 1	DRAWING TITLE MIRROR_MOUNT (M2E3)	DRAWING NO. JADA-55342DW0100	SHEET NO. L-26 / REVISION 0

General Tolerance : ISO 2768 m-K
Surface roughness not indicated : Ra6.3

NOTE
1. This drawing shows a machining drawing of a member molded by the hot isostatic pressing method.
2. The ridges and corners should be chamfered(about C0.2), and there should be no burrs.
3. After processing, perform degreasing cleaning.
4. SHEET NO.L-47 shows the assembly of parts before processing by the hot isostatic pressing method.

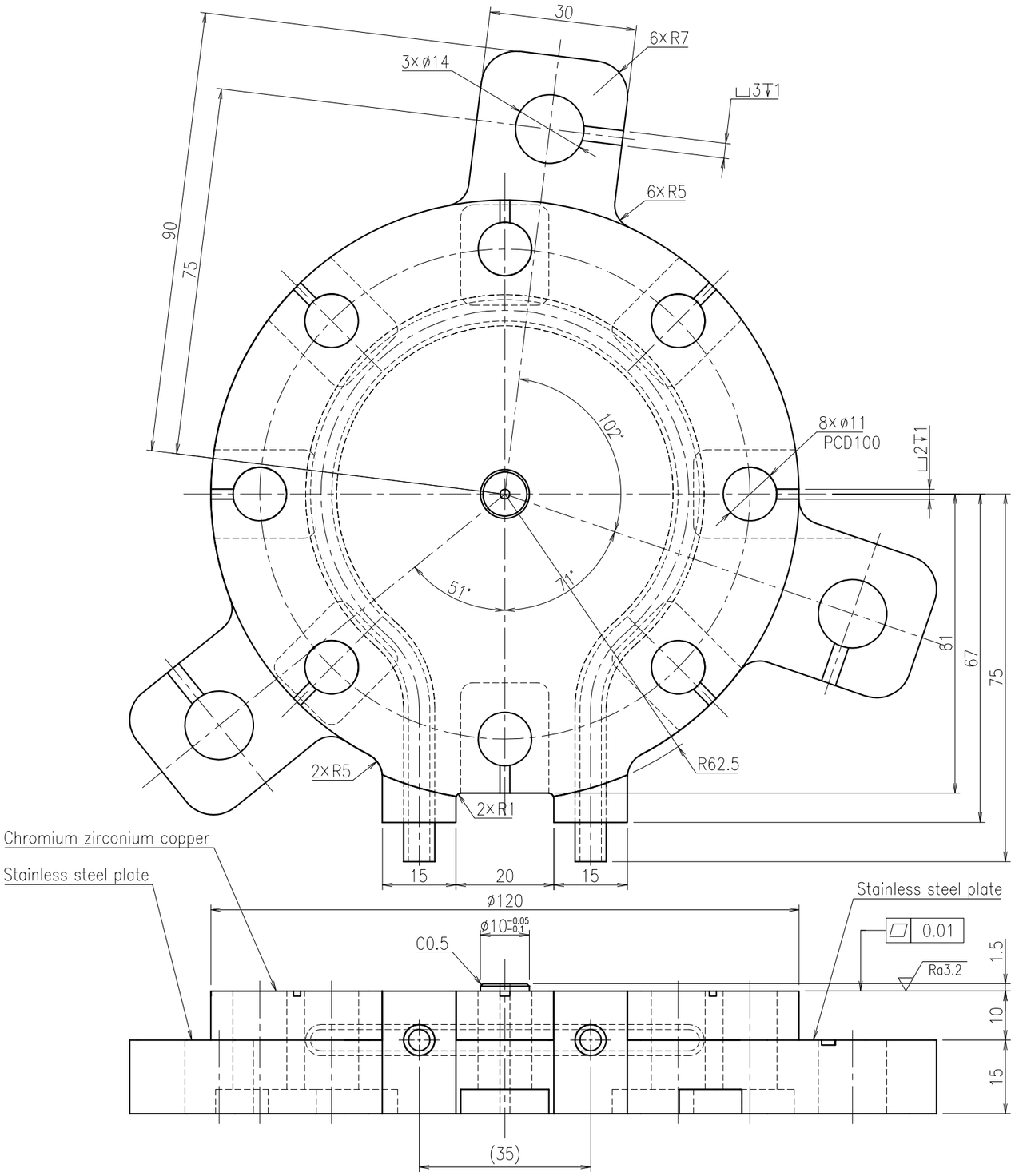

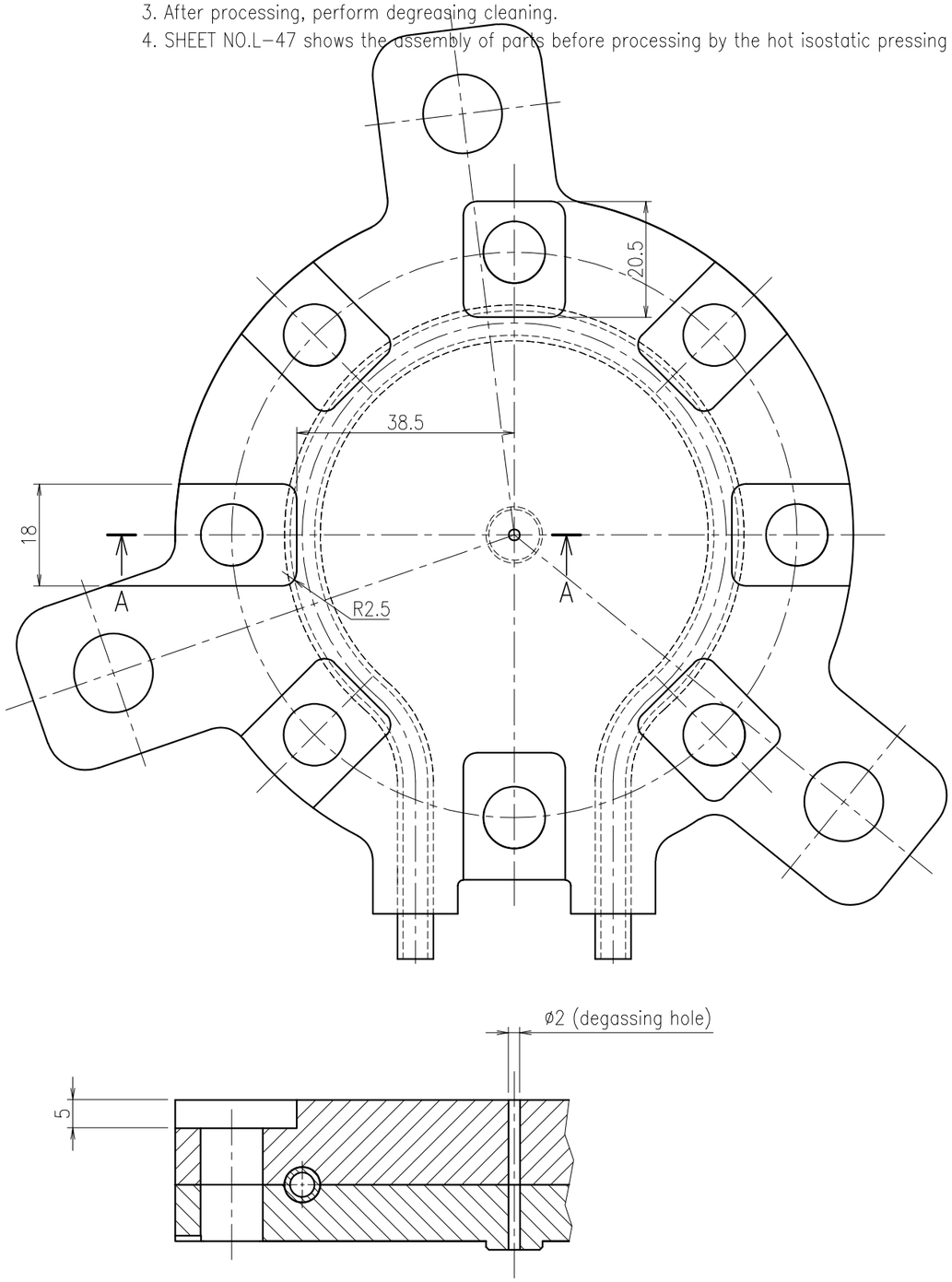

Sectional view A–A

REMARKS		APPROVED	REVIEWED	DRAWN	DATE 2021.11.30	PBS TITLE Diagnostics Poloidal Polarimeter	PROJECTION	SIZE A3
	QST National Institutes for Quantum and Radiological Science and Technology				SCALE 1 : 1	DRAWING TITLE MIRROR_MOUNT (M2E4)	DRAWING NO. JADA-55342DW0100	SHEET NO. L-27 / REVISION 0

General Tolerance : ISO 2768 m-K
Surface roughness not indicated : Ra6.3

NOTE
1. This drawing shows a machining drawing of a member molded by the hot isostatic pressing method.
2. The ridges and corners should be chamfered(about C0.2), and there should be no burrs.
3. After processing, perform degreasing cleaning.
4. SHEET NO.L-47 shows the assembly of parts before processing by the hot isostatic pressing method.

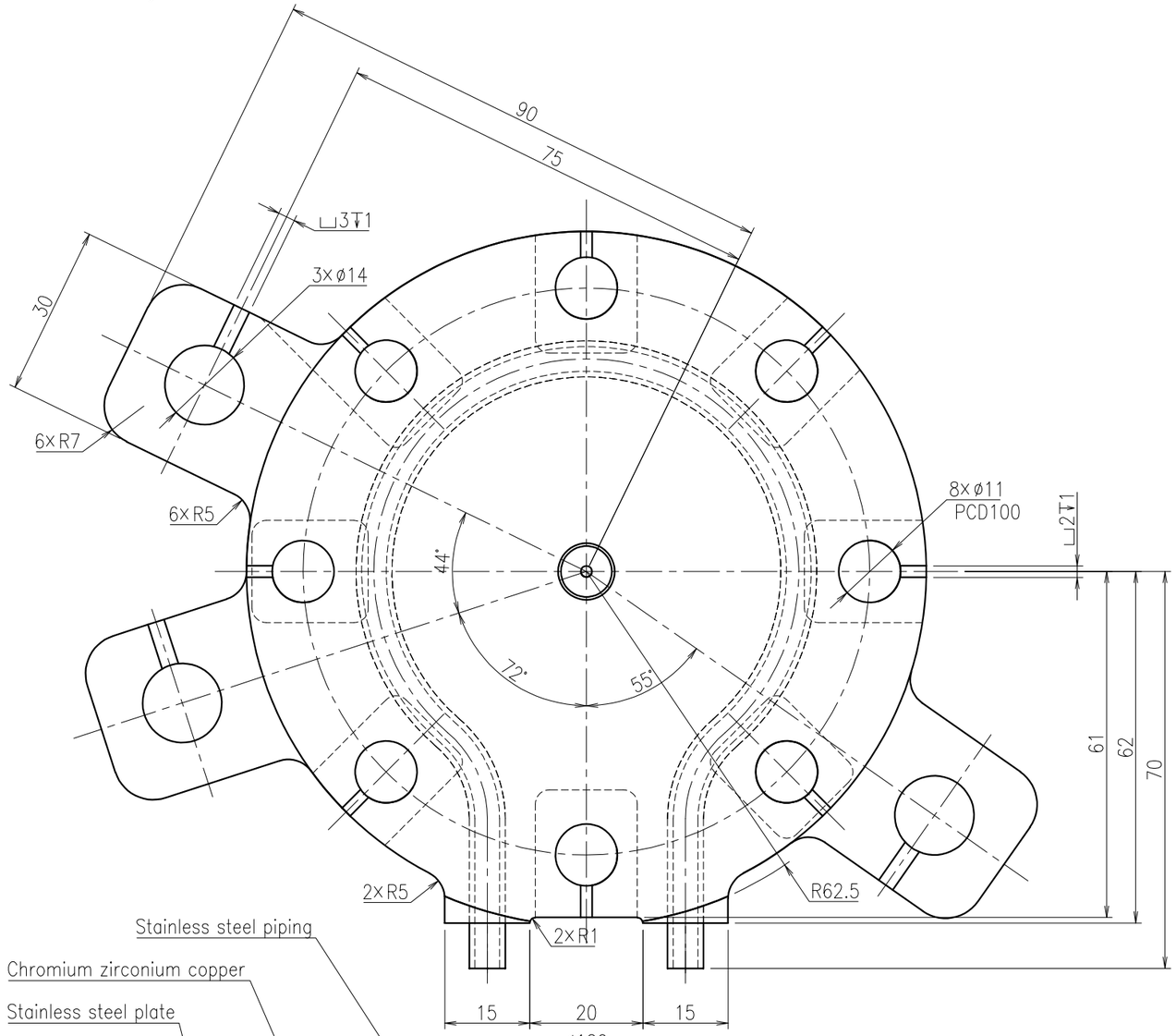

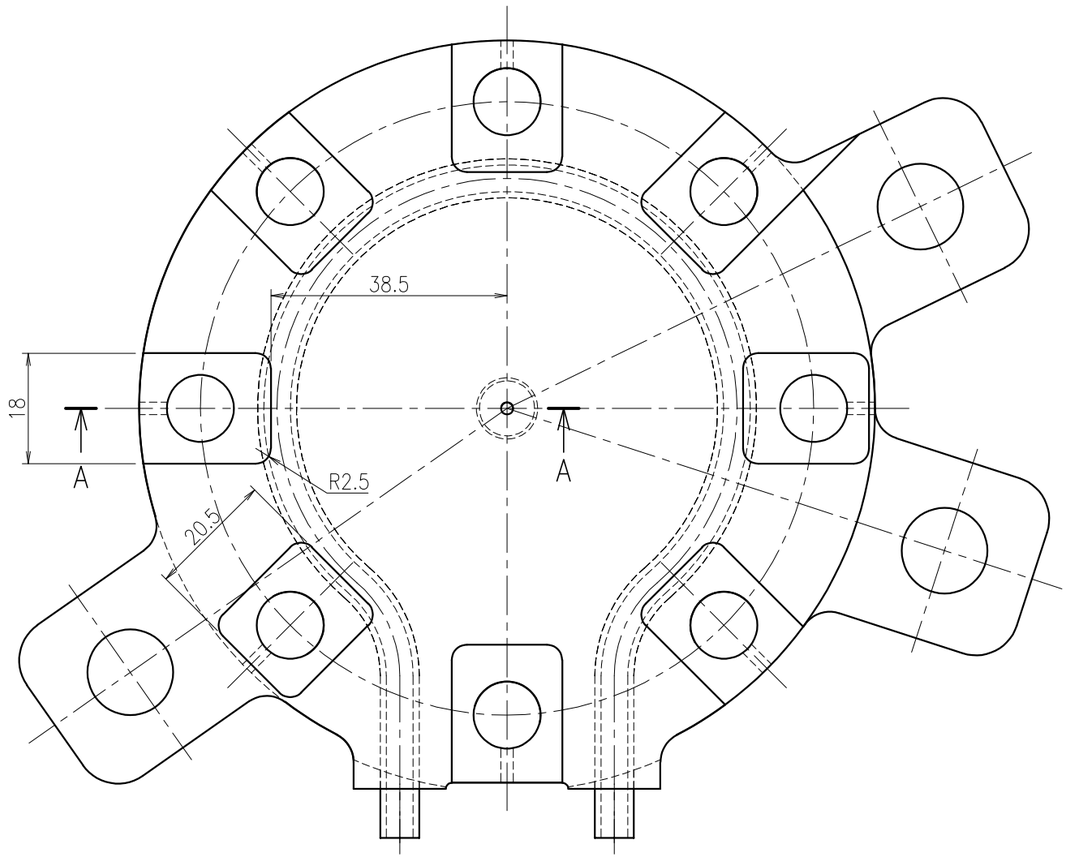

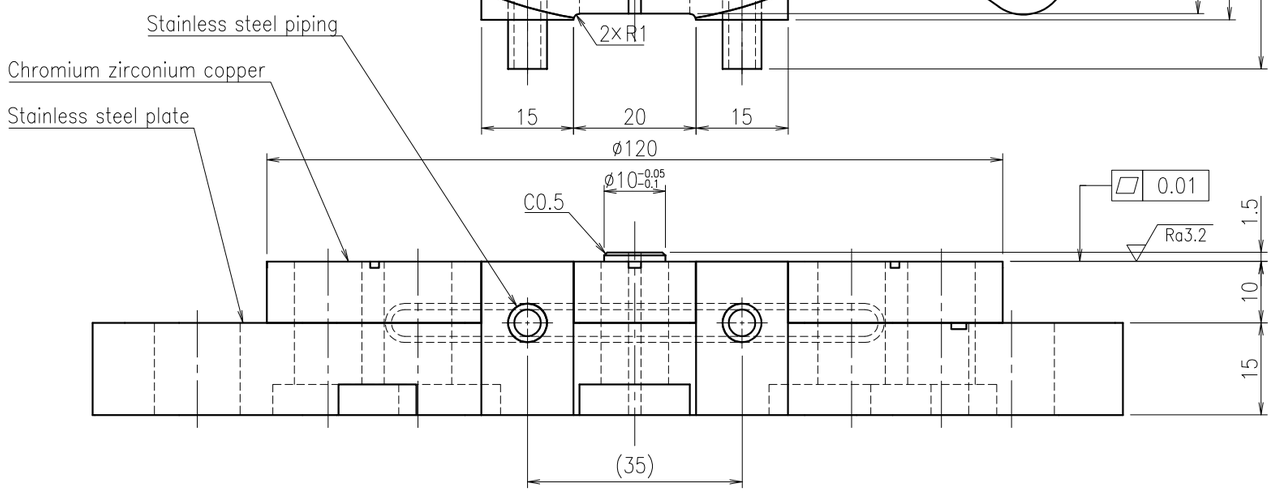

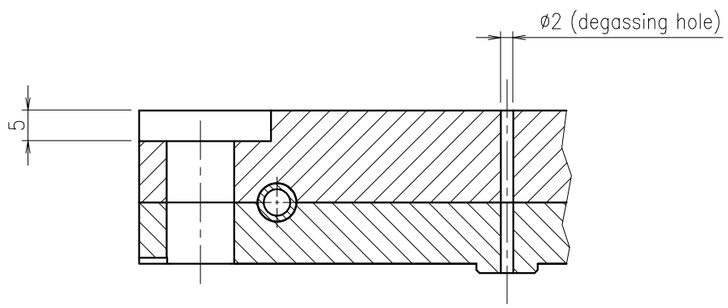

Sectional view A-A

REMARKS		APPROVED	REVIEWED	DRAWN	DATE	PBS TITLE	PROJECTION	SIZE
	QST National Institutes for Quantum and Radiological Science and Technology				2021.11.30	Diagnostics Poloidal Polarimeter		A3
					SCALE 1 : 1	DRAWING TITLE MIRROR_MOUNT (M2E9)	DRAWING NO. JADA-55342DW0100	SHEET NO. L-28 / REVISION 0

IO APPROVED BY : VAYAKIS G. DATE : 18 MAR 2022 INTENDED USAGE : FOR TENDER

General Tolerance : ISO 2768 m-K
Surface roughness not indicated : Ra6.3

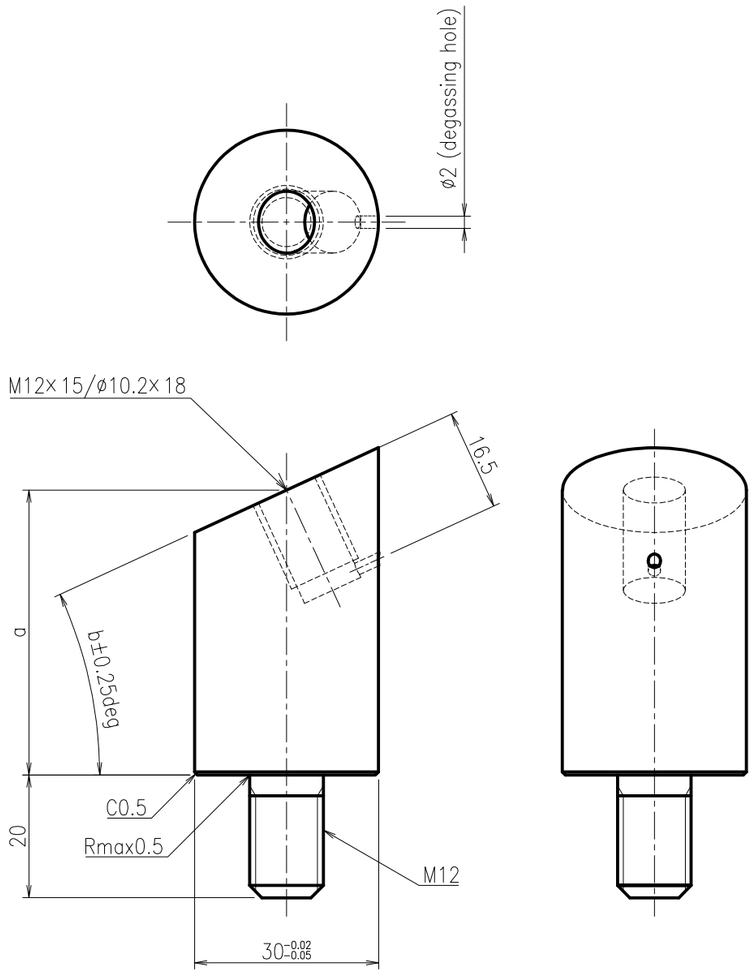

Mirror_number	Work	Dimension a	Dimension b	Quantity
M1E2	A	31.1 (mm)	24.7 (deg)	1
	B	46.5	24.7	1
	C	70.9	24.7	1
M1E3	A	28.9	13.3	1
	B	45.7	13.3	1
	C	63.4	13.3	1
M1E4	A	24.4	20.4	1
	B	28.5	20.4	1
	C	44.3	20.4	1
M1E9	A	35.5	18.1	1
	B	48.8	18.1	1
	C	70.0	18.1	1
M2E2	A	25.0	17.3	1
	B	36.1	17.3	1
	C	46.7	17.3	1
M2E3	A	34.3	9.4	1
	B	49.6	9.4	1
	C	54.5	9.4	1
M2E4	A	38.2	16.0	1
	B	39.4	16.0	1
	C	67.0	16.0	1
M2E9	A	33.0	10.0	1
	B	38.7	10.0	1
	C	50.6	10.0	1

NOTE
1. This drawing shows the mirror rod of the LEMM.
2. The material of these parts is SS316LN-IG.
3. The ridges and corners should be chamfered(about C0.2), and there should be no burrs.
4. After processing, perform degreasing cleaning.

REMARKS		APPROVED	REVIEWED	DRAWN	DATE 2021.11.30	PBS TITLE Diagnostics Poloidal Polarimeter	PROJECTION	SIZE A3
	QST National Institutes for Quantum and Radiological Science and Technology				SCALE 1 : 1	DRAWING TITLE LEMM_MIRROR_ROD	DRAWING NO. JADA-55342DW0100	SHEET NO. L-29 / REVISION 0

General Tolerance : ISO 2768 m-K
Surface roughness not indicated : Ra6.3

Name	Material	Quantity	Remarks
PIPING_SUPPORT_TYPE_1	SS316LN-IG	2	
PIPING_SUPPORT_TYPE_3	SS316LN-IG	1	
PIPING_SUPPORT_TYPE_6	SS316LN-IG	12	
PIPING_SUPPORT_TYPE_7	SS316LN-IG	2	
PIPING_SUPPORT_TYPE_15	SS316LN-IG	2	
PIPING_SUPPORT_TYPE_16	SS316LN-IG	1	
PIPING_SUPPORT_TYPE_17	SS316LN-IG	1	

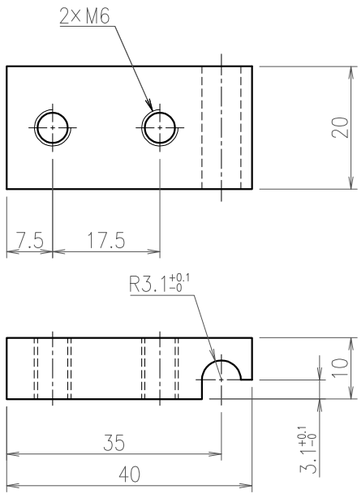

PIPING_SUPPORT_TYPE_1

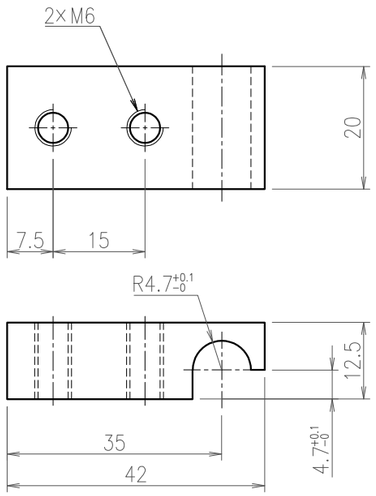

PIPING_SUPPORT_TYPE_3

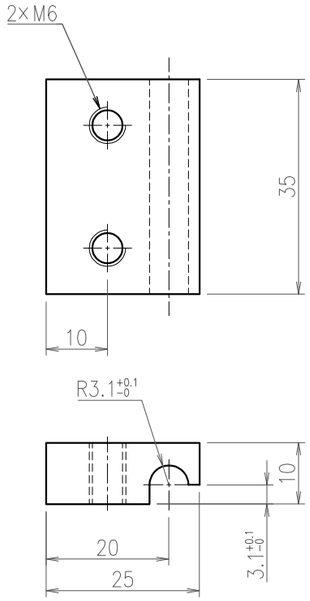

PIPING_SUPPORT_TYPE_6

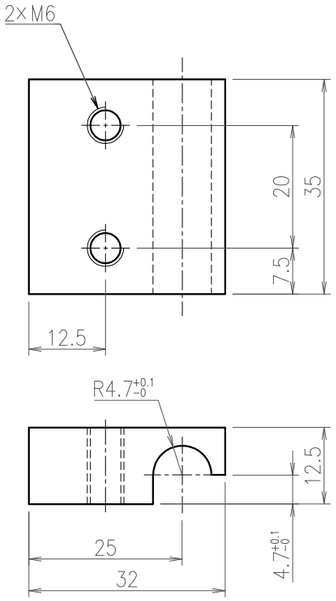

PIPING_SUPPORT_TYPE_7

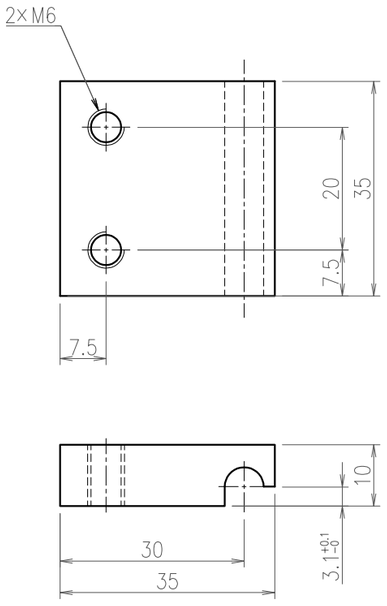

PIPING_SUPPORT_TYPE_15

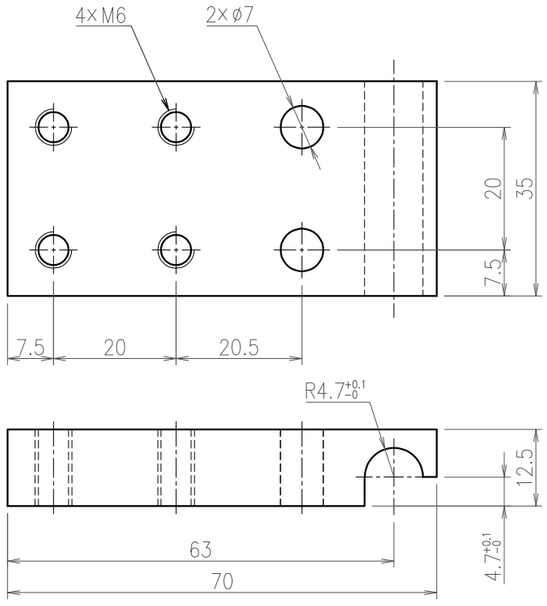

PIPING_SUPPORT_TYPE_16

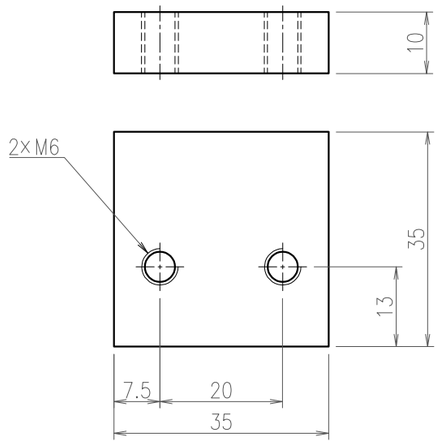

PIPING_SUPPORT_TYPE_17

NOTE
1. The ridges and corners should be chamfered(about C0.2), and there should be no burrs.
2. After processing, perform degreasing cleaning.

REMARKS		APPROVED	REVIEWED	DRAWN	DATE 2021.11.30	PBS TITLE Diagnostics Poloidal Polarimeter		PROJECTION	SIZE A3
	QST National Institutes for Quantum and Radiological Science and Technology				SCALE 1 : 1	DRAWING TITLE LEMM_PIPING_SUPPORT (1/4)	DRAWING NO. JADA-55342DW0100	SHEET NO. L-30	REVISION 0

Name	Material	Quantity	Remarks
PIPING_SUPPORT_PILLAR_TYPE_1	SS316LN-IG	1	
PIPING_SUPPORT_PILLAR_TYPE_3	SS316LN-IG	1	

General Tolerance : ISO 2768 m-K
Surface roughness not indicated : Ra6.3

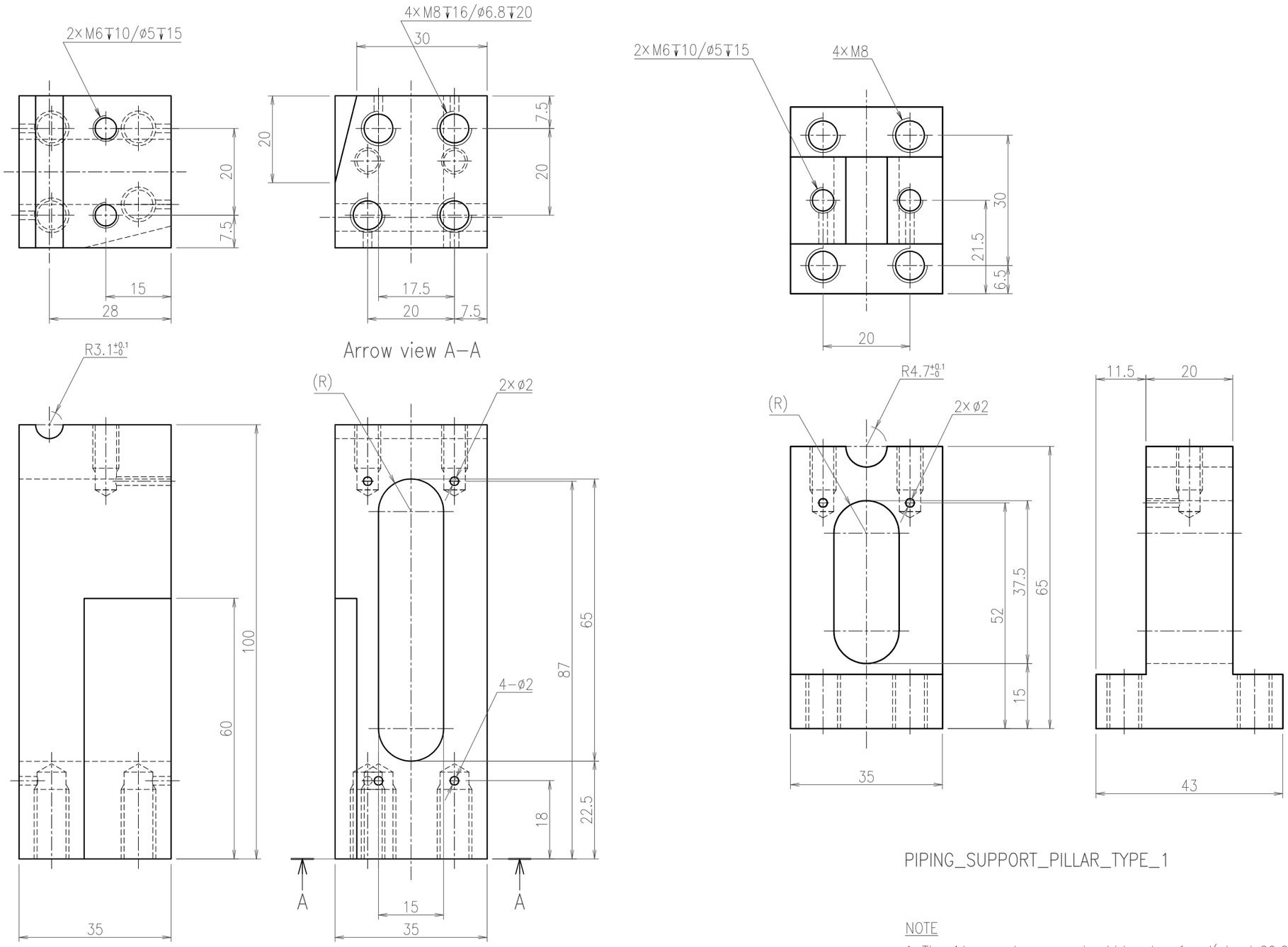

PIPING_SUPPORT_PILLAR_TYPE_3

PIPING_SUPPORT_PILLAR_TYPE_1

NOTE
1. The ridges and corners should be chamfered(about C0.2), and there should be no burrs.
2. After processing, perform degreasing cleaning.

REMARKS		APPROVED	REVIEWED	DRAWN	DATE 2021.11.30	PBS TITLE Diagnostics Poloidal Polarimeter		PROJECTION	SIZE A3
	QST National Institutes for Quantum and Radiological Science and Technology				SCALE 1 : 1	DRAWING TITLE LEMM_PIPING_SUPPORT (2/4)	DRAWING NO. JADA-55342DW0100	SHEET NO. L-31	REVISION 0

IO APPROVED BY : VAYAKIS G. DATE : 18 MAR 2022 INTENDED USAGE : FOR TENDER

Name	Material	Quantity	Remarks
PIPING_SUPPORT_PILLAR_TYPE_4	SS316LN-IG	1	
PIPING_SUPPORT_PILLAR_TYPE_5	SS316LN-IG	2	

General Tolerance : ISO 2768 m-K
Surface roughness not indicated : Ra6.3

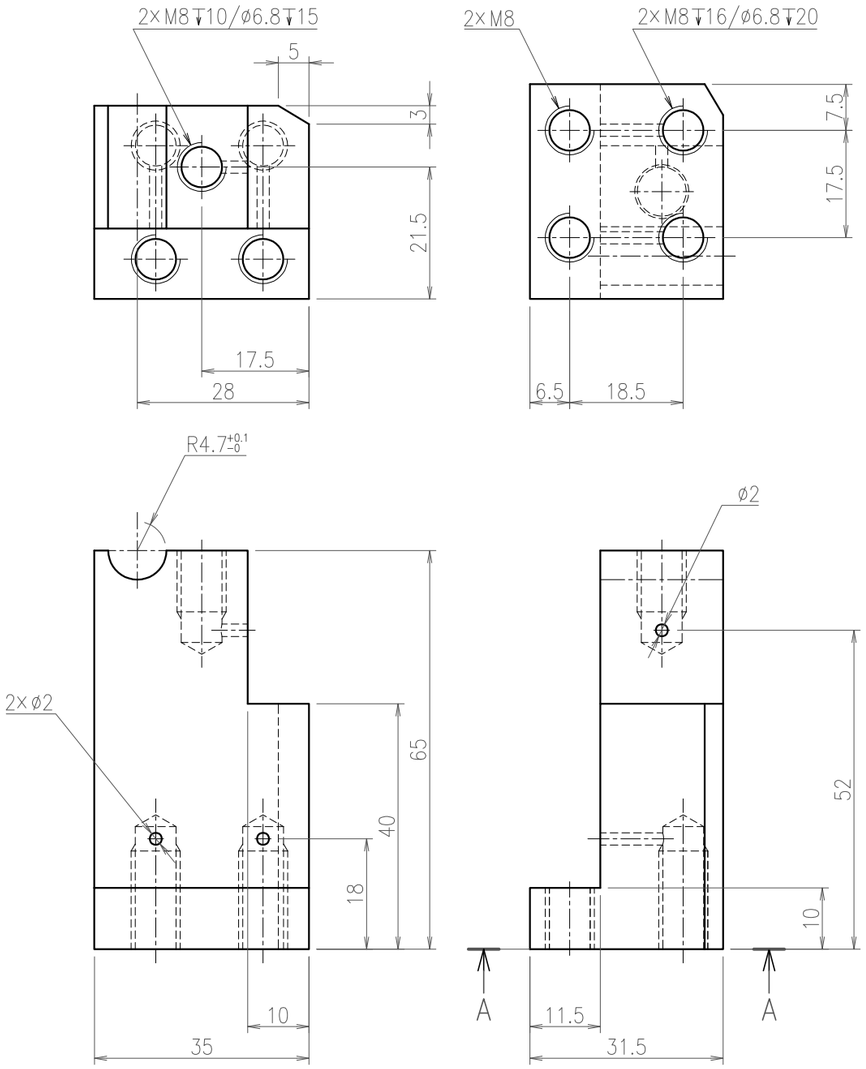

PIPING_SUPPORT_PILLAR_TYPE_4

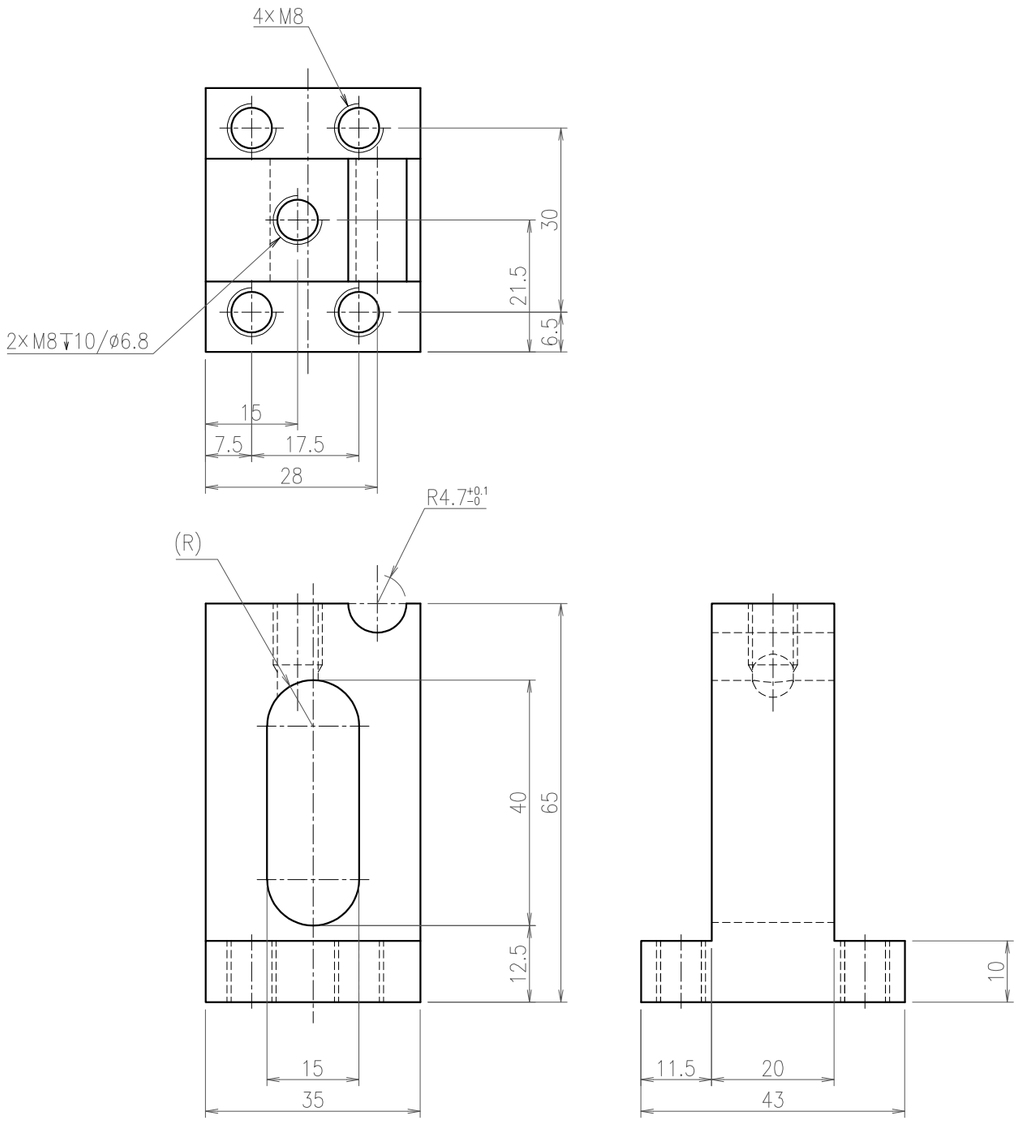

PIPING_SUPPORT_PILLAR_TYPE_5

NOTE
1. The ridges and corners should be chamfered(about C0.2), and there should be no burrs.
2. After processing, perform degreasing cleaning.

REMARKS		APPROVED	REVIEWED	DRAWN	DATE 2021.11.30	PBS TITLE Diagnostics Poloidal Polarimeter		PROJECTION	SIZE A3
	QST National Institutes for Quantum and Radiological Science and Technology				SCALE 1 : 1	DRAWING TITLE LEMM_PIPING_SUPPORT (3/4)	DRAWING NO. JADA-55342DW0100	SHEET NO. L-32	REVISION 0

General Tolerance : ISO 2768 m-K
Surface roughness not indicated : Ra6.3

Name	Material	Quantity	Remarks
PIPING_SUPPORT_PILLAR_TYPE_6	SS316LN-IG	1	
PIPING_SUPPORT_COVER_TYPE_1	SS316LN-IG	1	
PIPING_SUPPORT_COVER_TYPE_3	SS316LN-IG	1	
PIPING_SUPPORT_COVER_TYPE_4	SS316LN-IG	1	
PIPING_SUPPORT_COVER_TYPE_5	SS316LN-IG	1	
PIPING_SUPPORT_COVER_TYPE_6	SS316LN-IG	1	

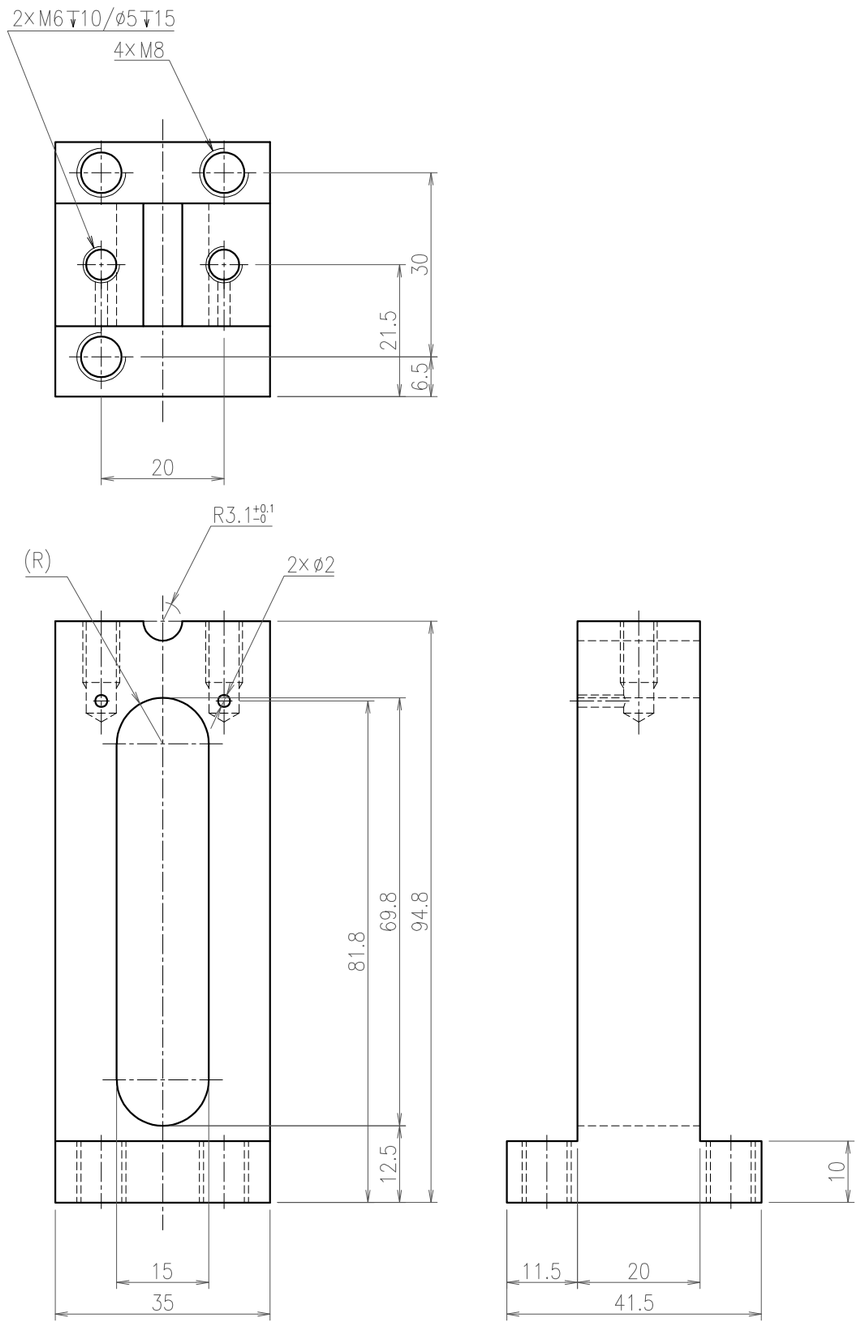

PIPING_SUPPORT_PILLAR_TYPE_6

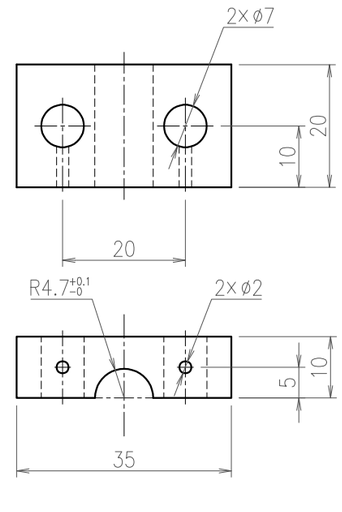

PIPING_SUPPORT_COVER_TYPE_1

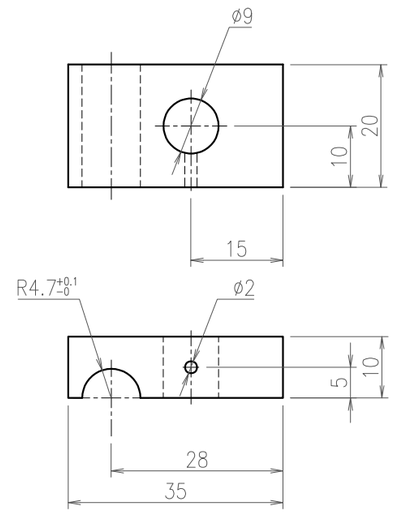

PIPING_SUPPORT_COVER_TYPE_5

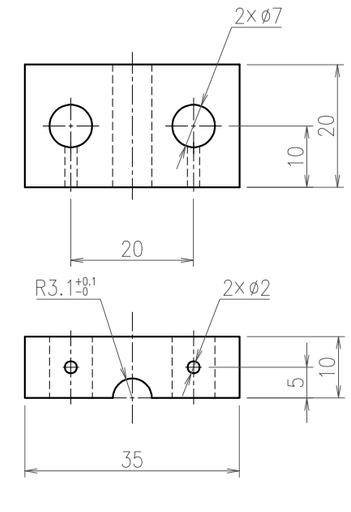

PIPING_SUPPORT_COVER_TYPE_6

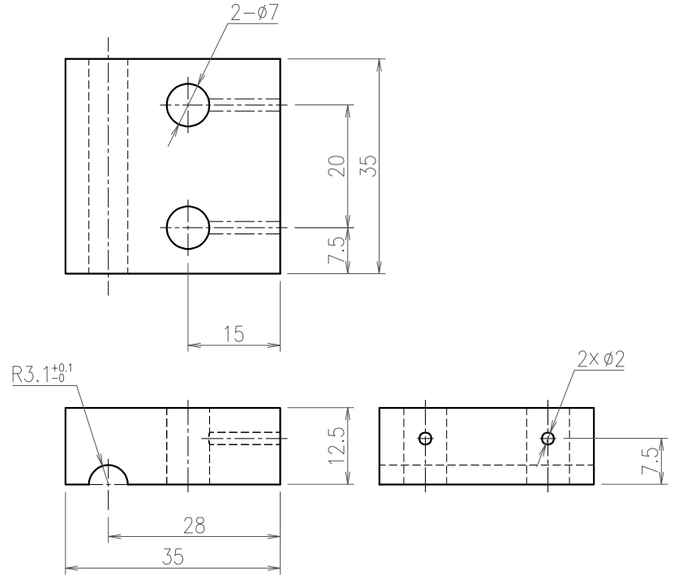

PIPING_SUPPORT_COVER_TYPE_3

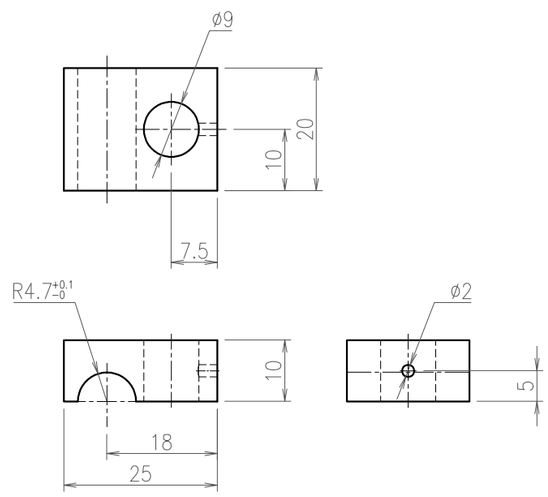

PIPING_SUPPORT_COVER_TYPE_4

NOTE
1. The ridges and corners should be chamfered(about C0.2), and there should be no burrs.
2. After processing, perform degreasing cleaning.

REMARKS		APPROVED	REVIEWED	DRAWN	DATE 2021.11.30	PBS TITLE Diagnostics Poloidal Polarimeter		PROJECTION	SIZE A3
	QST National Institutes for Quantum and Radiological Science and Technology				SCALE 1 : 1	DRAWING TITLE LEMM_PIPING_SUPPORT (4/4)	DRAWING NO. JADA-55342DW0100	SHEET NO. L-33	REVISION 0

Name	Material	Quantity	Remarks
LEMM_FIRST_MIRROR_PIPING_TYPE_1	SS316LN-IG	1	
LEMM_FIRST_MIRROR_PIPING_TYPE_2	SS316LN-IG	1	
LEMM_FIRST_MIRROR_PIPING_TYPE_3	SS316LN-IG	1	
LEMM_FIRST_MIRROR_PIPING_TYPE_4	SS316LN-IG	1	
LEMM_FIRST_MIRROR_PIPING_TYPE_5	SS316LN-IG	1	

NOTE

1. This drawing shows the cooling water piping of the first mirror of the UEMM.
2. The diameter of the pipe is 6.35 mm and the thickness is 0.89 mm.
3. The bending radius of the pipe is about 15 mm.
4. After processing, perform degreasing cleaning.
5. These pipes will be welded after the brazing shown in sheet L-10 or L-11 is completed and after the mirror assemblies are bolted to M1 or M2 base plates. The pipe dimension should be adjusted to the assembled mirror assemblies and base plates.

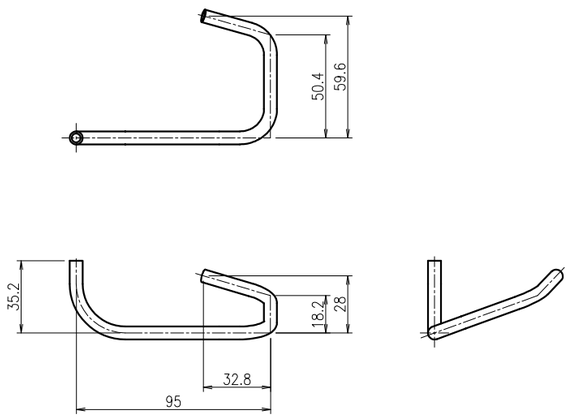

LEMM_FIRST_MIRROR_PIPING_TYPE_1

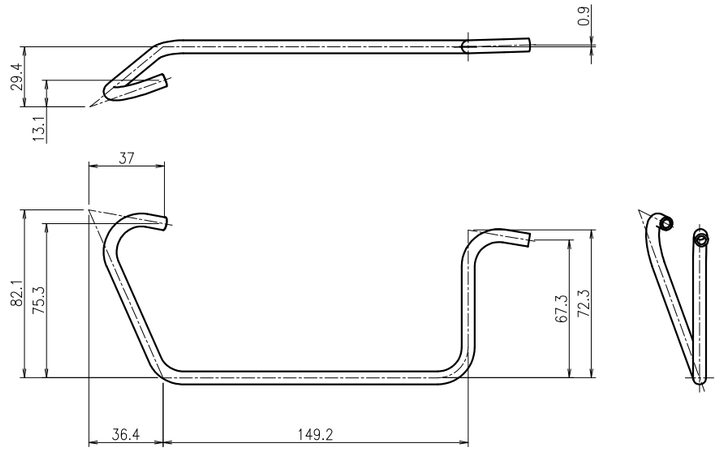

LEMM_FIRST_MIRROR_PIPING_TYPE_2

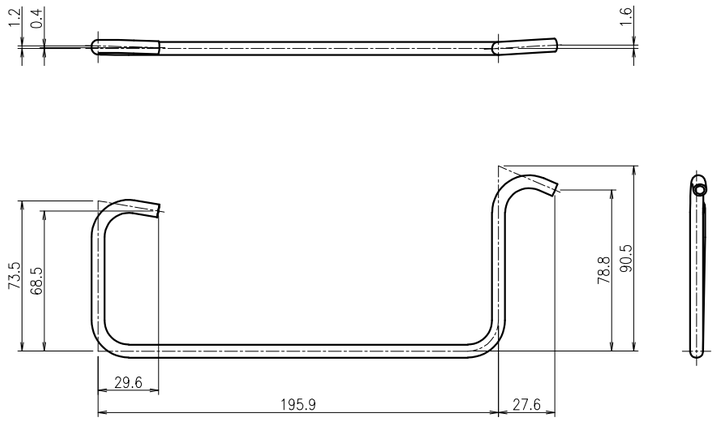

LEMM_FIRST_MIRROR_PIPING_TYPE_3

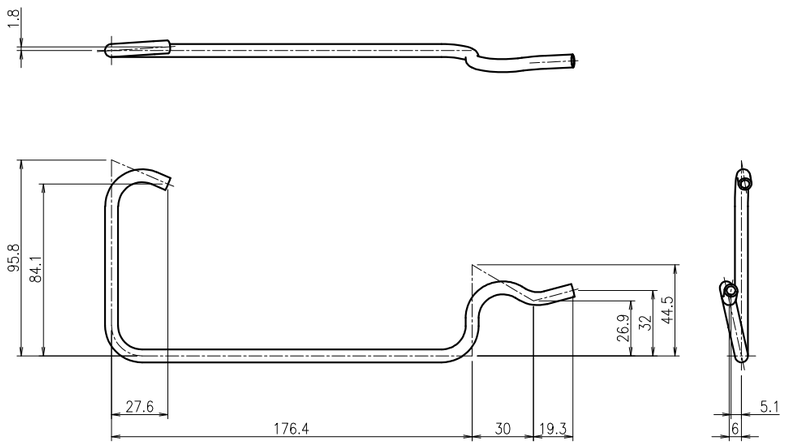

LEMM_FIRST_MIRROR_PIPING_TYPE_4

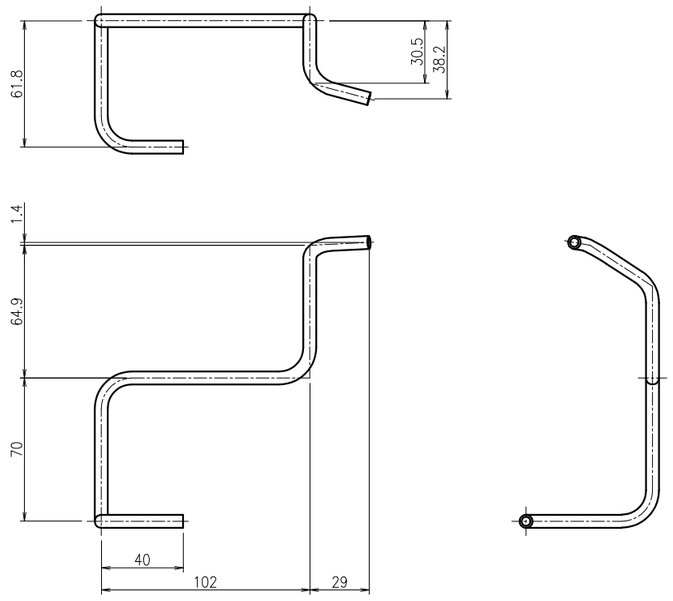

LEMM_FIRST_MIRROR_PIPING_TYPE_5

REMARKS		APPROVED	REVIEWED	DRAWN	DATE	PBS TITLE		PROJECTION	SIZE
	QST National Institutes for Quantum and Radiological Science and Technology				2021.11.30	Diagnostics Poloidal Polarimeter			A3
					SCALE 1 : 3	DRAWING TITLE LEMM_FIRST_MIRROR_PIPING	DRAWING NO. JADA-55342DW0100	SHEET NO. L-34	REVISION 0

Name	Material	Quantity	Remarks
LEMM_SECOND_MIRROR_PIPING_TYPE_1	SS316LN-IG	1	
LEMM_SECOND_MIRROR_PIPING_TYPE_2	SS316LN-IG	1	
LEMM_SECOND_MIRROR_PIPING_TYPE_3	SS316LN-IG	1	
LEMM_SECOND_MIRROR_PIPING_TYPE_4	SS316LN-IG	1	
LEMM_SECOND_MIRROR_PIPING_TYPE_5	SS316LN-IG	1	

NOTE

1. This drawing shows the cooling water piping of the first mirror of the UEMM.
2. The diameter of the pipe is 6.35 mm and the thickness is 0.89 mm.
3. The bending radius of the pipe is about 15 mm.
4. After processing, perform degreasing cleaning.
5. These pipes will be welded after the brazing shown in sheet L-10 or L-11 is completed and after the mirror assemblies are bolted to M1 or M2 base plates. The pipe dimension should be adjusted to the assembled mirror assemblies and base plates.

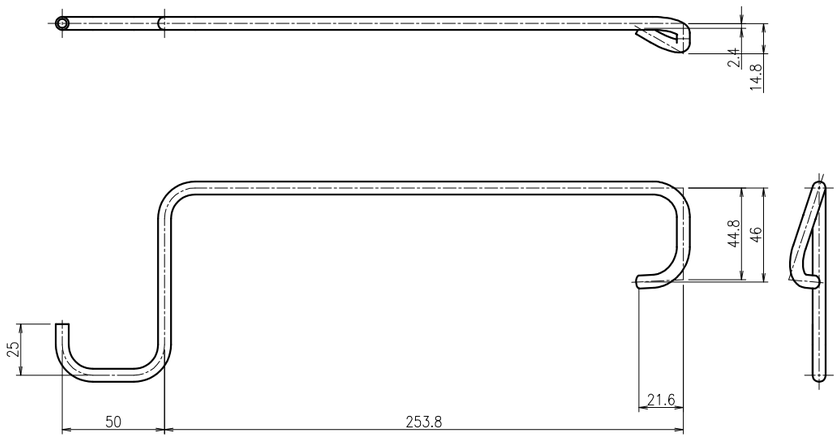

LEMM_SECOND_MIRROR_PIPING_TYPE_1

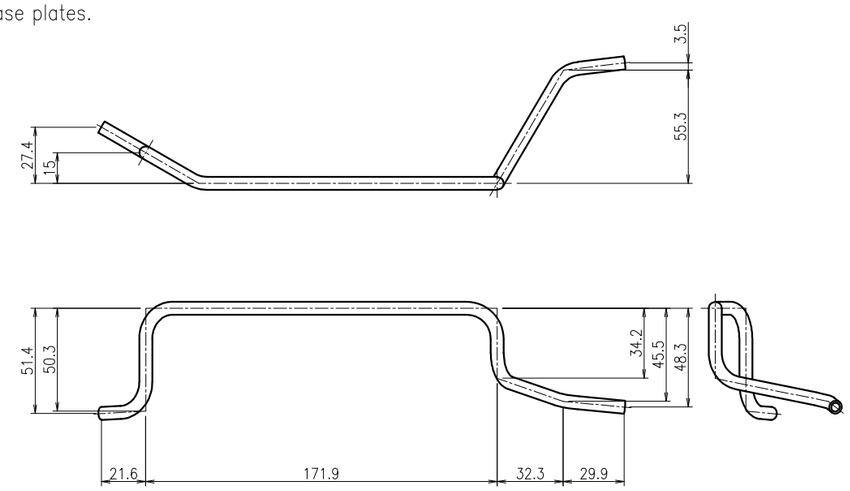

LEMM_SECOND_MIRROR_PIPING_TYPE_2

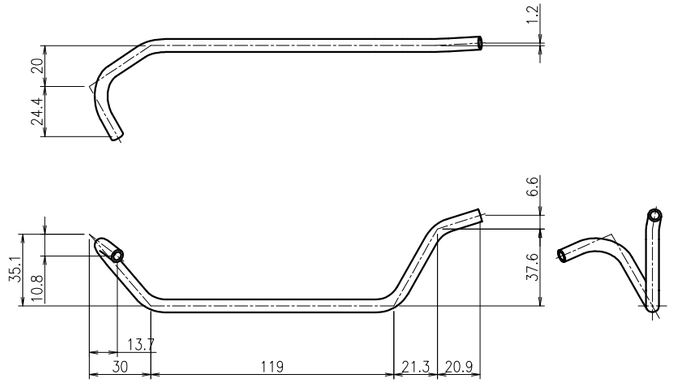

LEMM_SECOND_MIRROR_PIPING_TYPE_3

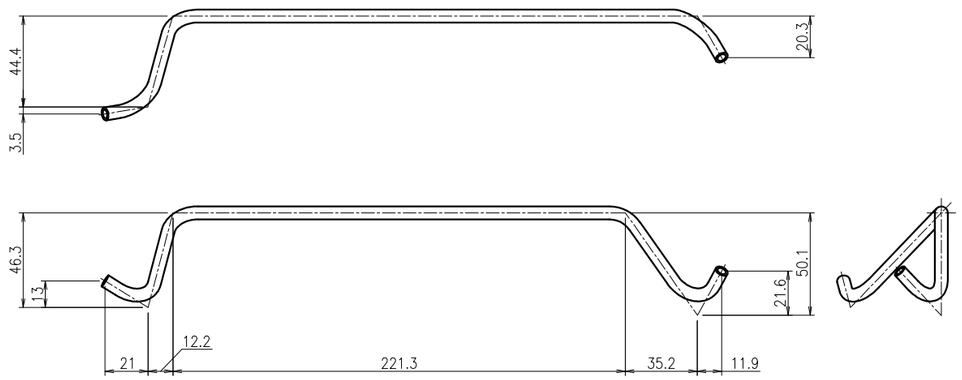

LEMM_SECOND_MIRROR_PIPING_TYPE_4

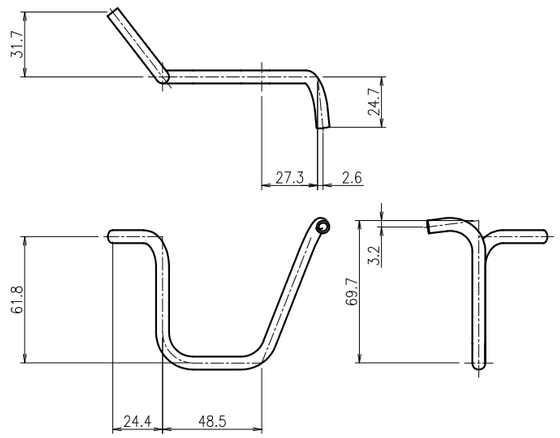

LEMM_SECOND_MIRROR_PIPING_TYPE_5

REMARKS		APPROVED	REVIEWED	DRAWN	DATE 2021.11.30	PBS TITLE Diagnostics Poloidal Polarimeter		PROJECTION	SIZE A3
	QST National Institutes for Quantum and Radiological Science and Technology				SCALE 1 : 3	DRAWING TITLE LEMM_SECOND_MIRROR_PIPING	DRAWING NO. JADA-55342DW0100	SHEET NO. L-35	REVISION 0

Name	Material	Quantity	Remarks
LEMM_SUPPLY_PIPING	SS316LN-IG	1	
LEMM_RETURN_PIPING	SS316LN-IG	1	

NOTE

1. This drawing shows the cooling water piping of the first mirror of the UEMM.
2. The diameter of the pipe is 9.53 mm and the thickness is 0.89 mm.
3. The bending radius of the pipe is about 24 mm.
4. After processing, perform degreasing cleaning.
5. These pipes will be welded after the brazing shown in sheet L-10 or L-11 is completed and after the mirror assemblies are bolted to M1 or M2 base plates.
   The pipe dimension should be adjusted to the assembled mirror assemblies and base plates.

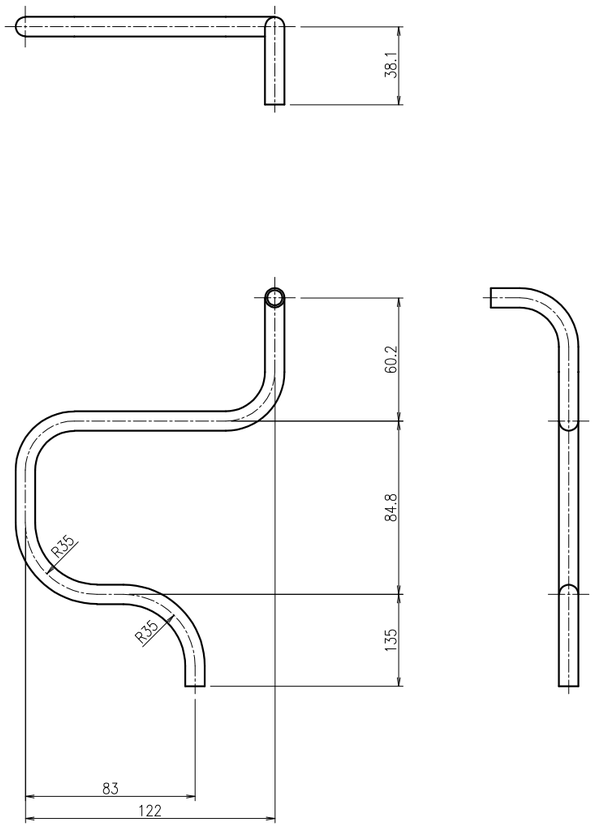

LEMM_SUPPLY_PIPING

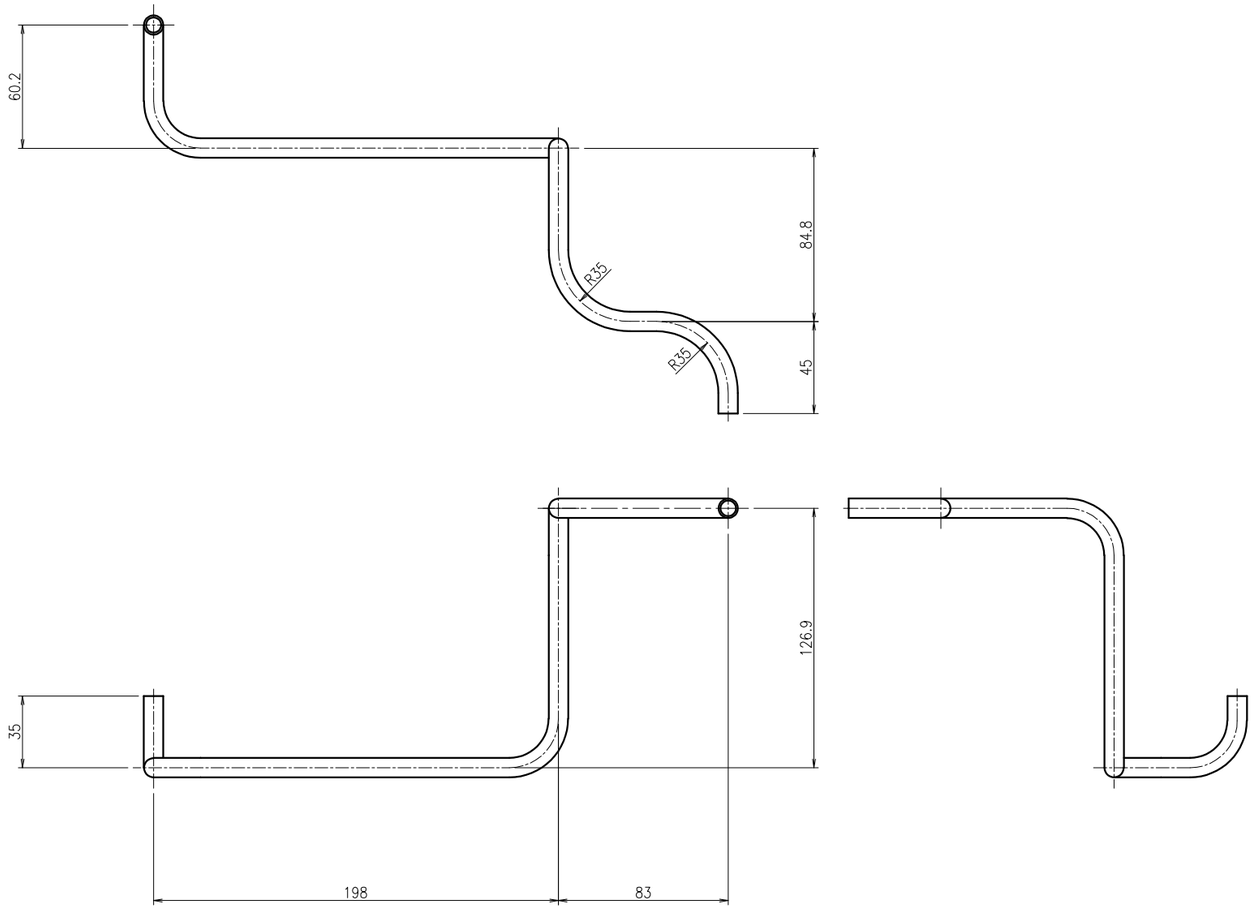

LEMM_RETURN_PIPING

REMARKS		APPROVED	REVIEWED	DRAWN	DATE 2021.11.30	PBS TITLE Diagnostics Poloidal Polarimeter		PROJECTION	SIZE A3
	QST National Institutes for Quantum and Radiological Science and Technology				SCALE 1 : 3	DRAWING TITLE LEMM_SUPPLY/RETURN_PIPING	DRAWING NO. JADA-55342DW0100	SHEET NO. L-36	REVISION 0

Name	Material	Quantity	Remarks
LEMM_CONNECTING_ROD_INTER_PIPING	SS316LN-IG	1	

NOTE

1. This drawing shows the cooling water piping of the first mirror of the UEMM.
2. The diameter of the pipe is 9.53 mm and the thickness is 0.89 mm.
3. The bending radius of the pipe is about 24 mm.
4. After processing, perform degreasing cleaning.
5. These pipes will be welded after the brazing shown in sheet L-10 or L-11 is completed and after the mirror assemblies are bolted to M1 or M2 base plates.
   The pipe dimension should be adjusted to the assembled mirror assemblies and base plates.

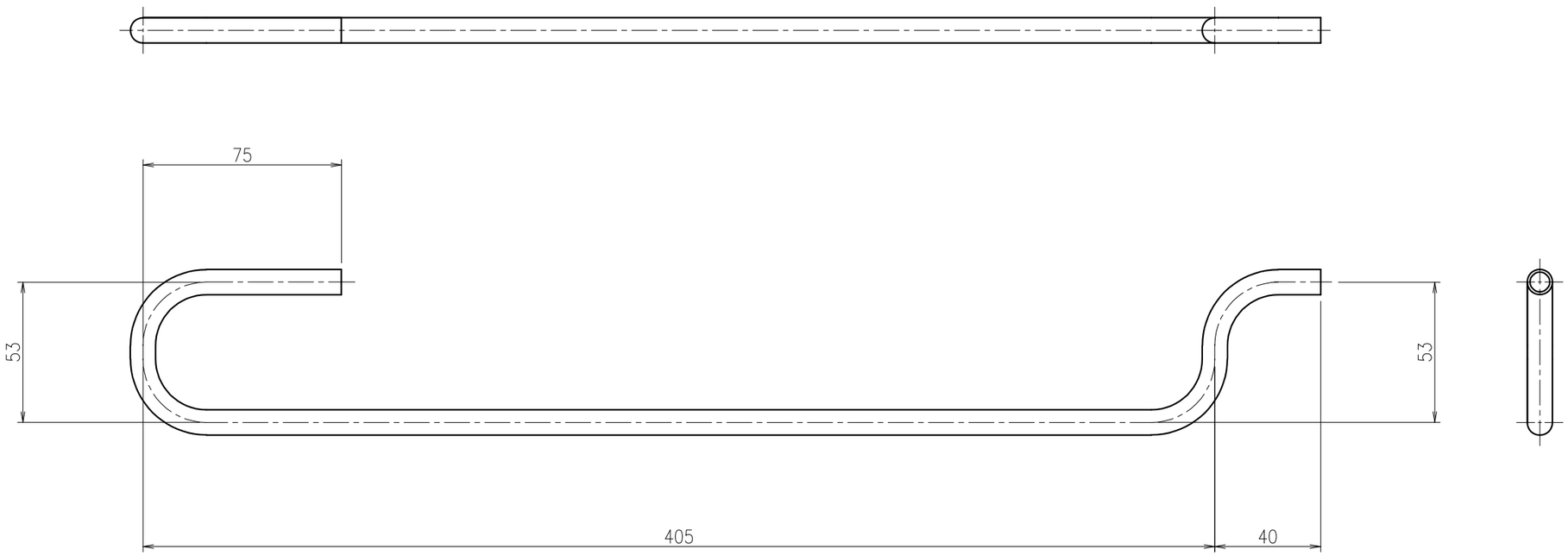

LEMM_CONNECTING_ROD_INTER_PIPING

REMARKS		APPROVED	REVIEWED	DRAWN	DATE 2021.11.30	PBS TITLE Diagnostics Poloidal Polarimeter		PROJECTION	SIZE A3
	QST National Institutes for Quantum and Radiological Science and Technology				SCALE 1 : 2	DRAWING TITLE LEMM_CONNECTING_ROD_INTER_PIPING	DRAWING NO. JADA-55342DW0100	SHEET NO. L-37	REVISION 0

No.	Name	Material	Quantity	Remarks
1	CONNECTING_PIPE_TYPE_1	SS316LN-IG	1×2	SHEET NO.L-41
2	CONNECTING_BASE_TYPE_1	SS316LN-IG	2×2	SHEET NO.L-43
3	NOZZLE_3/8INCH	SS316LN-IG	2×2	SHEET NO.L-44
4	THREADED_BOSS	SS316LN-IG	2×2	SHEET NO.L-44

NOTE

1. This drawing shows the assembly drawing of the connecting rod type 4 of the LEMM.
2. Welding of pipes requires full penetration welding.
3. The marked (*) dimensions are to be finished by machining the end face of the connecting base after welding.

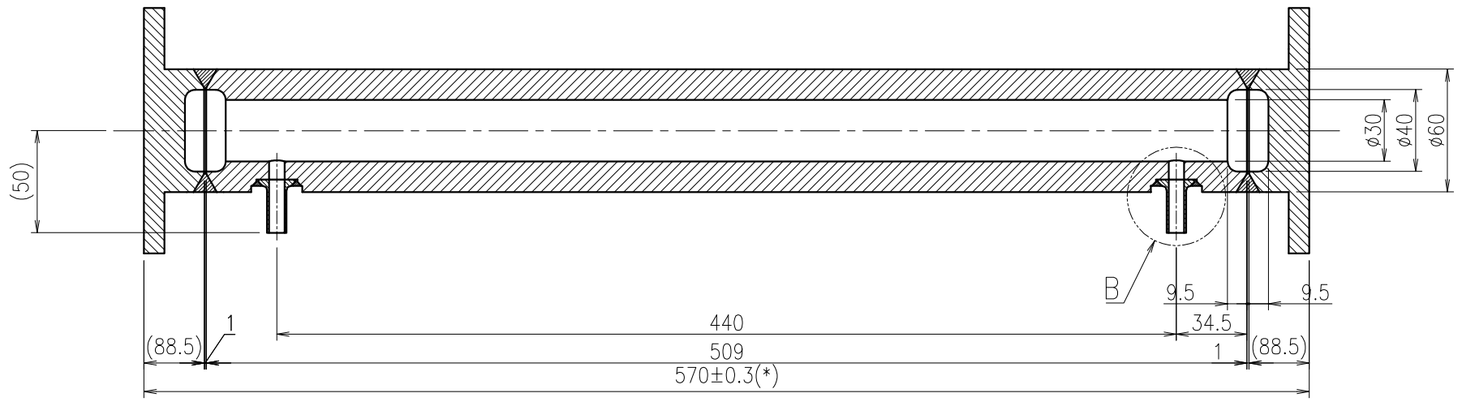

Sectional view A–A

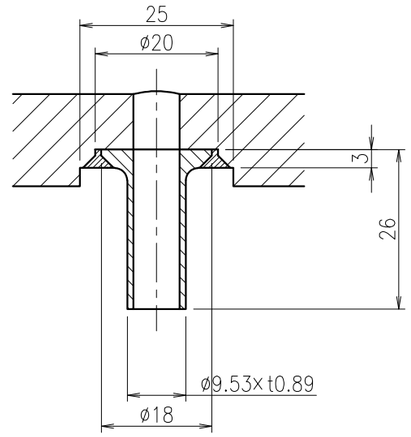

Detail B

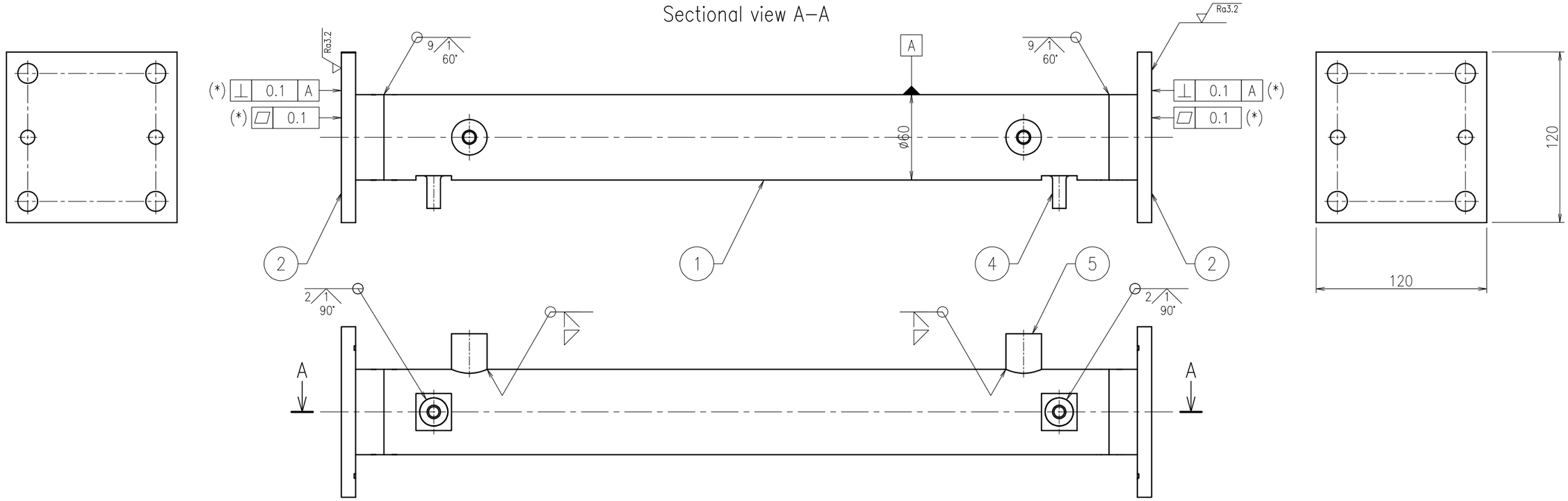

REMARKS		APPROVED	REVIEWED	DRAWN	DATE 2021.11.30	PBS TITLE Diagnostics Poloidal Polarimeter		PROJECTION	SIZE A3
	QST National Institutes for Quantum and Radiological Science and Technology				SCALE 1 : 3	DRAWING TITLE CONNECTING_ROD_TYPE_04_ASSEMBLY	DRAWING NO. JADA-55342DW0100	SHEET NO. L-38	REVISION 0

NOTE

1. This drawing shows the assembly drawing of the connecting rod type 5 of the LEMM.
2. Welding of pipes requires full penetration welding.
3. The marked (*) dimensions are to be finished by machining the end face of the connecting base after welding.

No.	Name	Material	Quantity	Remarks
1	CONNECTING_PIPE_TYPE_2	SS316LN-IG	1	SHEET NO.L-42
2	CONNECTING_BASE_TYPE_2	SS316LN-IG	1	SHEET NO.L-43
3	CONNECTING_BASE_TYPE_3	SS316LN-IG	1	SHEET NO.L-43
4	NOZZLE_3/8INCH	SS316LN-IG	2	SHEET NO.L-44
5	THREADED_BOSS	SS316LN-IG	2	SHEET NO.L-44

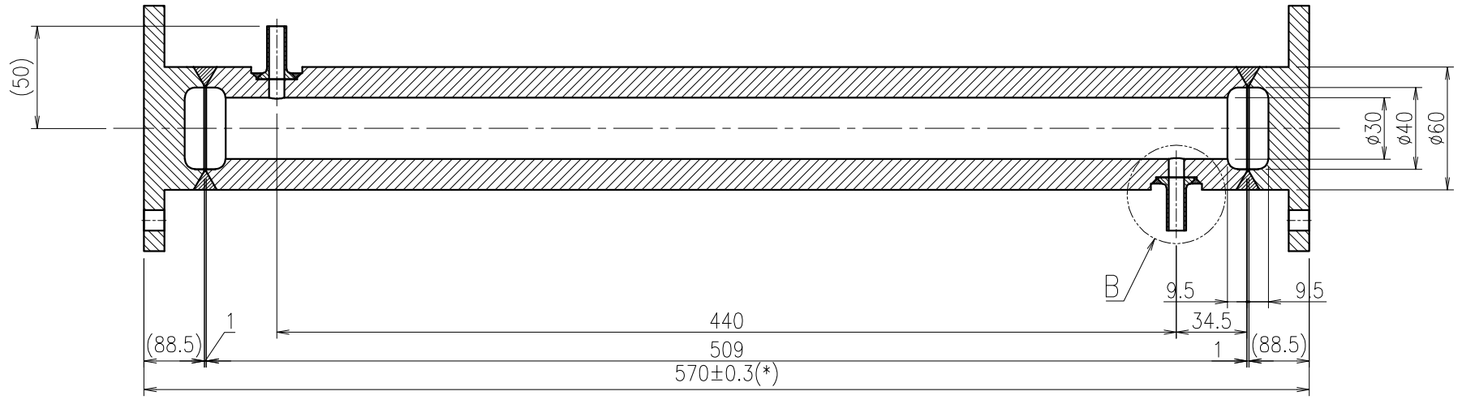

Sectional view A–A

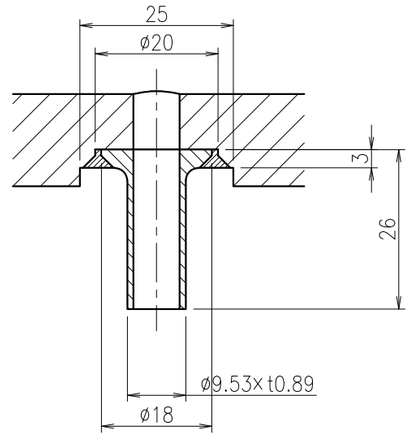

Detail B

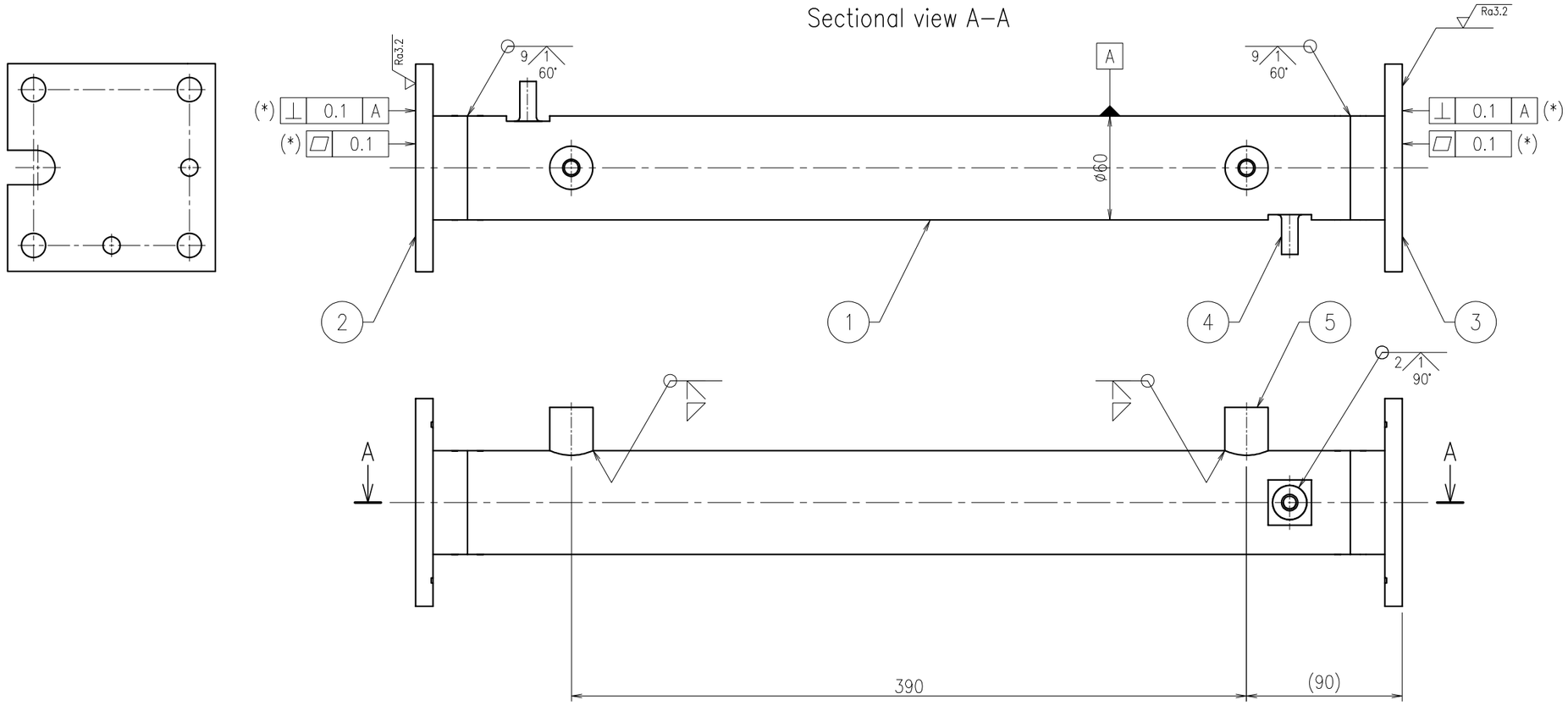

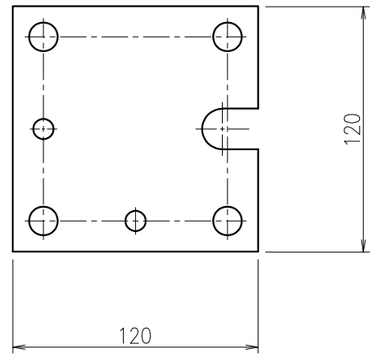

REMARKS		APPROVED	REVIEWED	DRAWN	DATE 2021.11.30	PBS TITLE Diagnostics Poloidal Polarimeter		PROJECTION	SIZE A3
	QST National Institutes for Quantum and Radiological Science and Technology				SCALE 1 : 3	DRAWING TITLE CONNECTING_ROD_TYPE_05_ASSEMBLY	DRAWING NO. JADA-55342DW0100	SHEET NO. L-39	REVISION 0

NOTE

1. This drawing shows the assembly drawing of the connecting rod type 6 of the LEMM.
2. Welding of pipes requires full penetration welding.
3. The marked (*) dimensions are to be finished by machining the end face of the connecting base after welding.

No.	Name	Material	Quantity	Remarks
1	CONNECTING_PIPE_TYPE_1	SS316LN-IG	1	SHEET NO.L-41
2	CONNECTING_BASE_TYPE_2	SS316LN-IG	1	SHEET NO.L-43
3	CONNECTING_BASE_TYPE_5	SS316LN-IG	1	SHEET NO.L-43
4	NOZZLE_3/8INCH	SS316LN-IG	2	SHEET NO.L-44
5	THREADED_BOSS	SS316LN-IG	2	SHEET NO.L-44

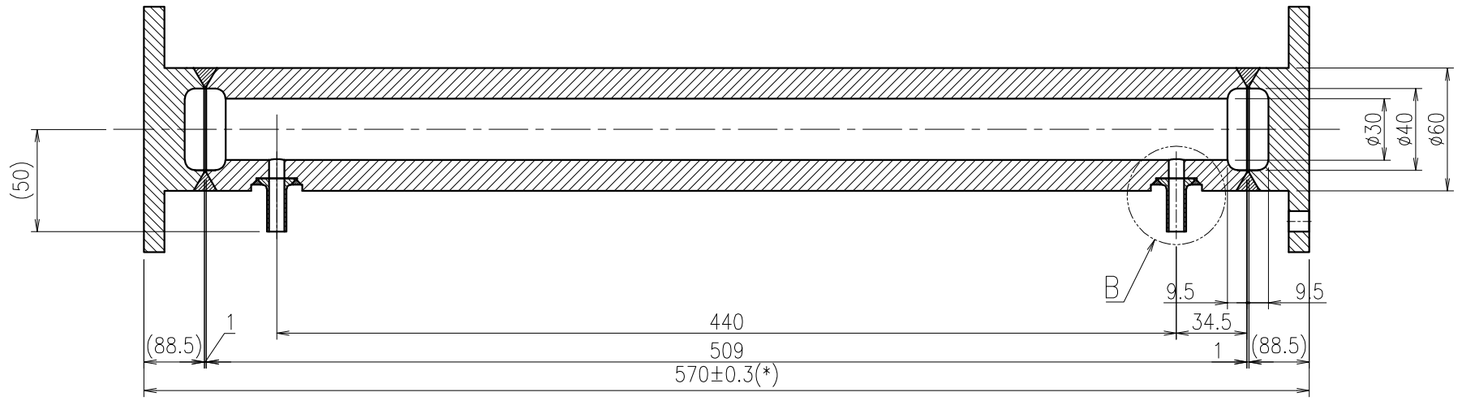

Sectional view A–A

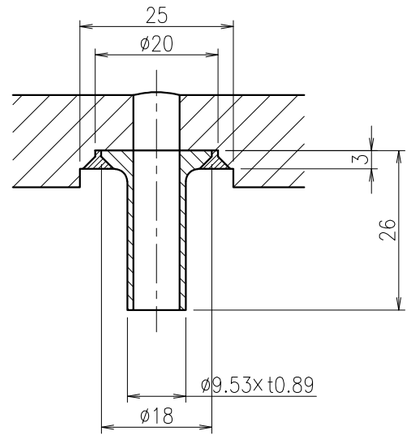

Detail B

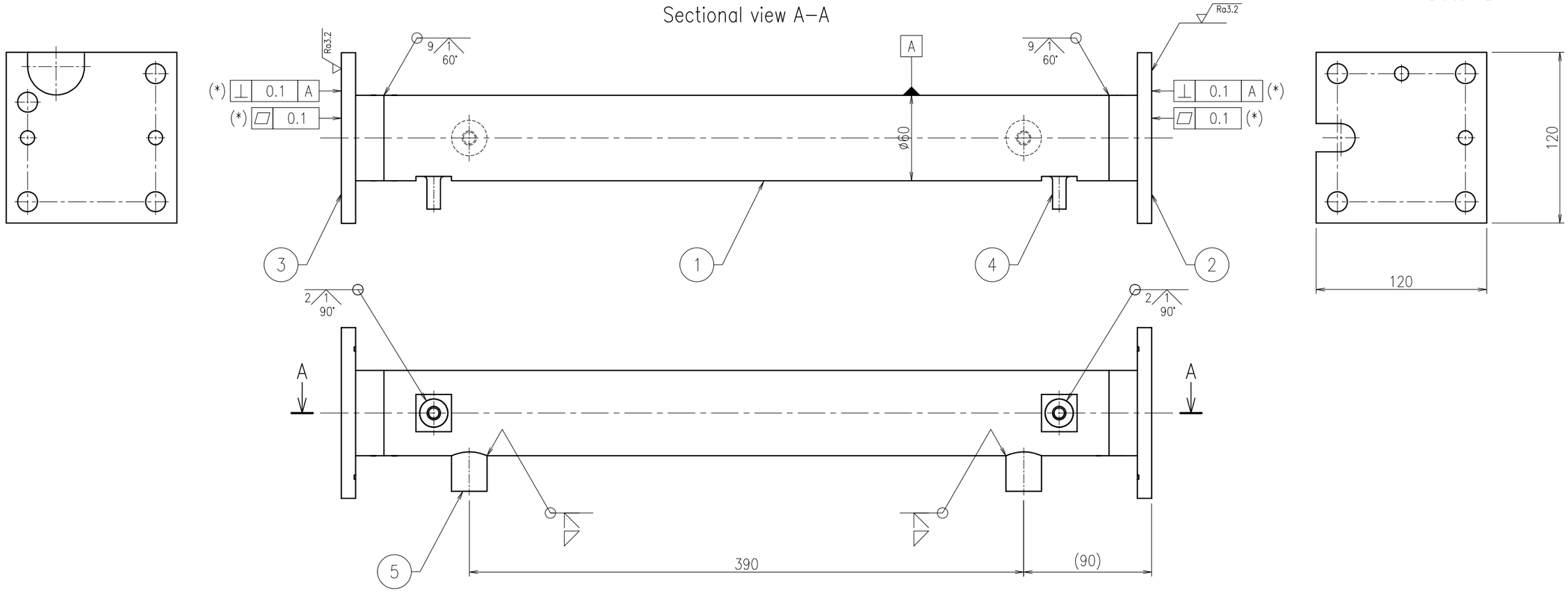

REMARKS		APPROVED	REVIEWED	DRAWN	DATE 2021.11.30	PBS TITLE Diagnostics Poloidal Polarimeter	PROJECTION	SIZE A3
	QST National Institutes for Quantum and Radiological Science and Technology				SCALE 1 : 3	DRAWING TITLE CONNECTING_ROD_TYPE_06_ASSEMBLY	DRAWING NO. JADA-55342DW0100	SHEET NO. L-40 / REVISION 0

Name	Material	Quantity	Remarks
CONNECTING_PIPE_TYPE_1	SS316LN-IG	2	

General Tolerance : ISO 2768 m-K
Surface roughness not indicated : Ra6.3

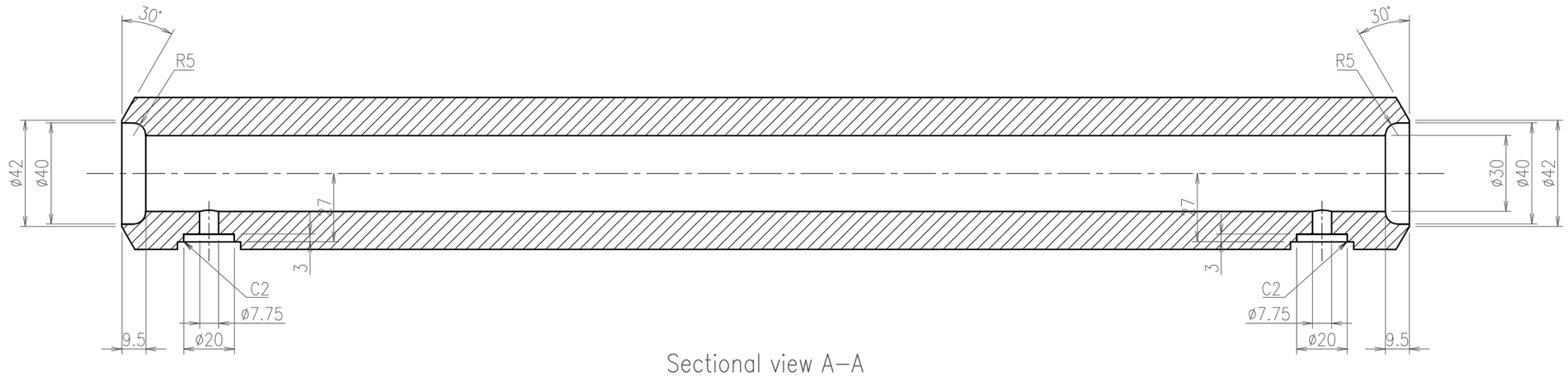

Sectional view A–A

NOTE
1. This drawing shows the pipe of the connecting rod of the LEMM.
2. The ridges and corners should be chamfered(about C0.2), and there should be no burrs.
3. After processing, perform degreasing cleaning.

REMARKS		APPROVED	REVIEWED	DRAWN	DATE 2021.11.30	PBS TITLE Diagnostics Poloidal Polarimeter		PROJECTION	SIZE A3
	QST National Institutes for Quantum and Radiological Science and Technology				SCALE 1 : 2	DRAWING TITLE CONNECTING_PIPE_TYPE_1	DRAWING NO. JADA-55342DW0100	SHEET NO. L-41	REVISION 0

Name	Material	Quantity	Remarks
CONNECTING_PIPE_TYPE_2	SS316LN-IG	2	

General Tolerance : ISO 2768 m-K
Surface roughness not indicated : Ra6.3

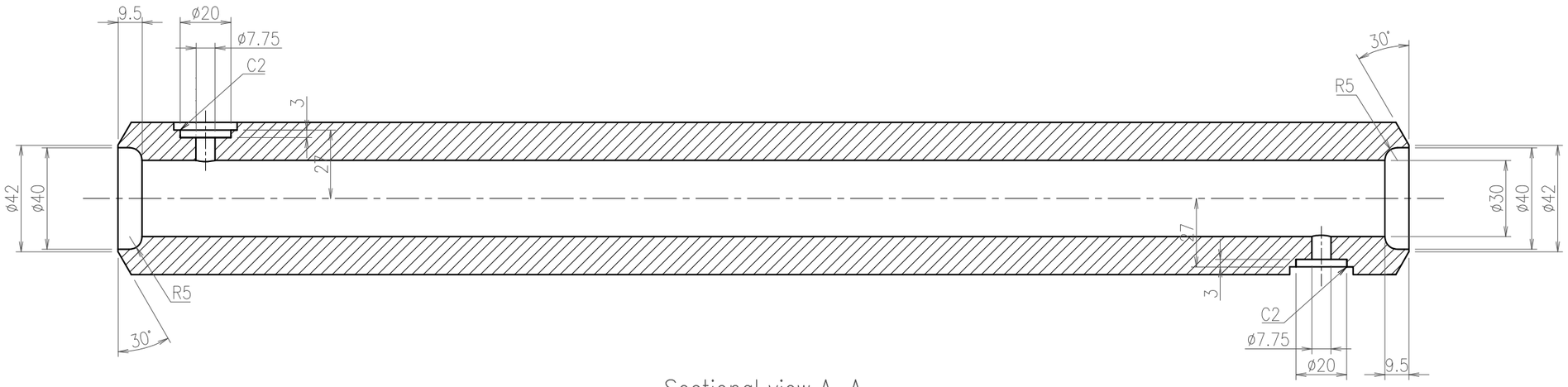

Sectional view A–A

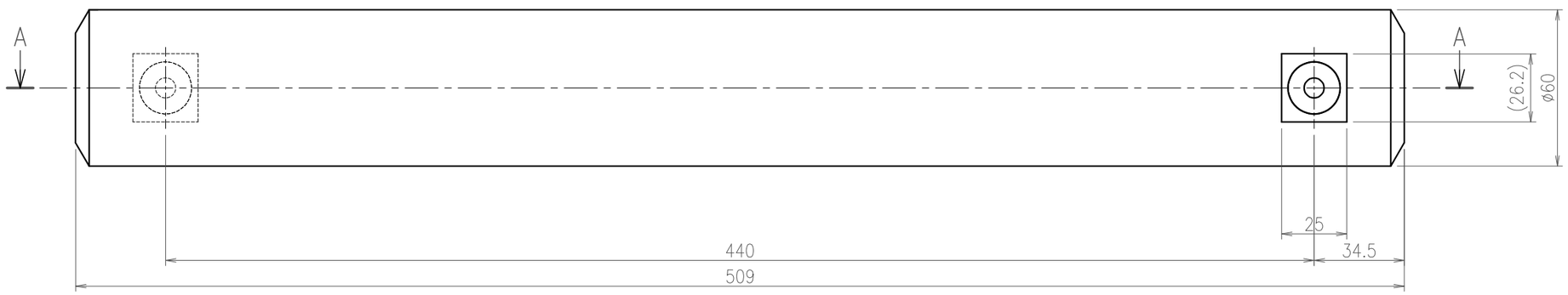

NOTE
1. This drawing shows the pipe of the connecting rod of the LEMM.
2. The ridges and corners should be chamfered(about C0.2), and there should be no burrs.
3. After processing, perform degreasing cleaning.

REMARKS		APPROVED	REVIEWED	DRAWN	DATE 2021.11.30	PBS TITLE Diagnostics Poloidal Polarimeter		PROJECTION	SIZE A3
	QST National Institutes for Quantum and Radiological Science and Technology				SCALE 1 : 2	DRAWING TITLE CONNECTING_PIPE_TYPE_2	DRAWING NO. JADA-55342DW0100	SHEET NO. L-42	REVISION 0

General Tolerance : ISO 2768 m-K
Surface roughness not indicated : Ra6.3

NOTE
1. This drawing shows the base of the connecting rod of the LEMM.
2. The ridges and corners should be chamfered(about C0.2), and there should be no burrs.
3. After processing, perform degreasing cleaning.

Name	Material	Quantity	Remarks
CONNECTING_BASE_TYPE_1	SS316LN-IG	4	
CONNECTING_BASE_TYPE_2	SS316LN-IG	2	
CONNECTING_BASE_TYPE_3	SS316LN-IG	1	
CONNECTING_BASE_TYPE_5	SS316LN-IG	1	

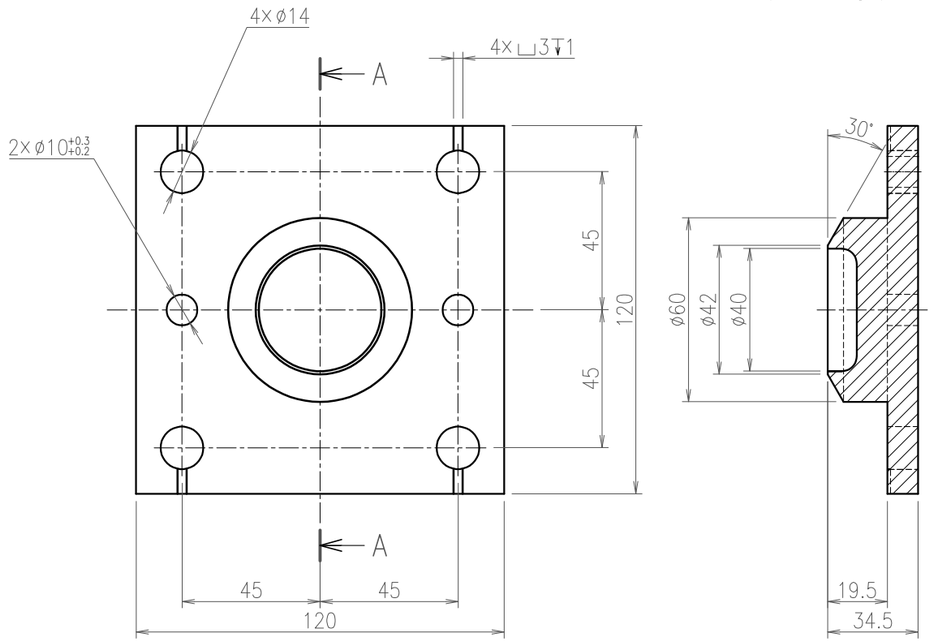

Sectional view A–A

CONNECTING_BASE_TYPE_1

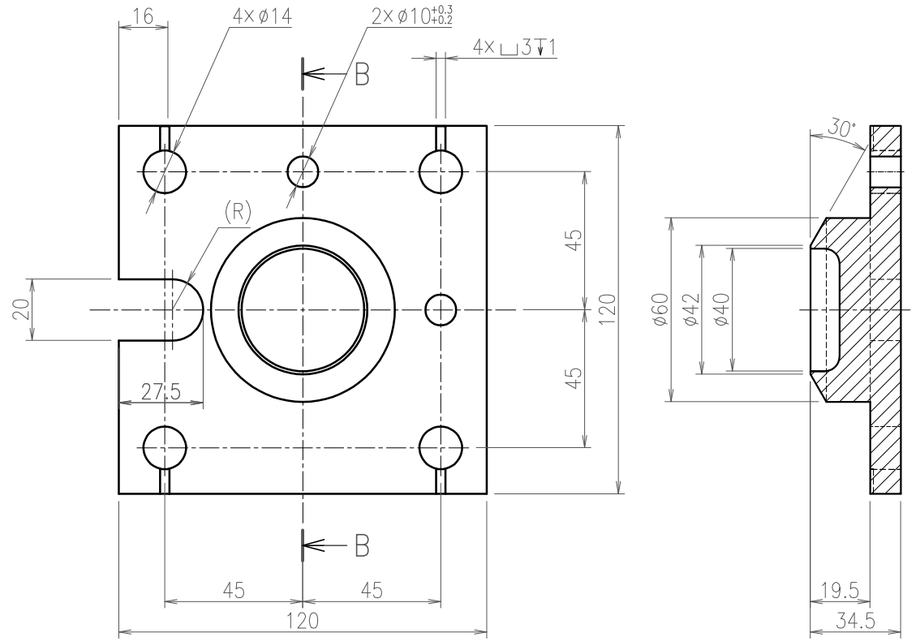

Sectional view B–B

CONNECTING_BASE_TYPE_2

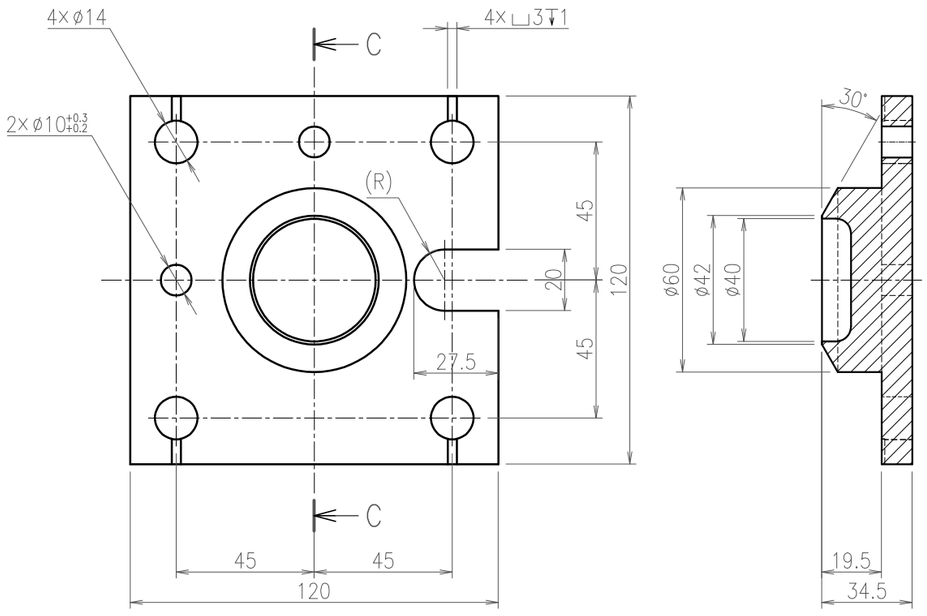

Sectional view C–C

CONNECTING_BASE_TYPE_3

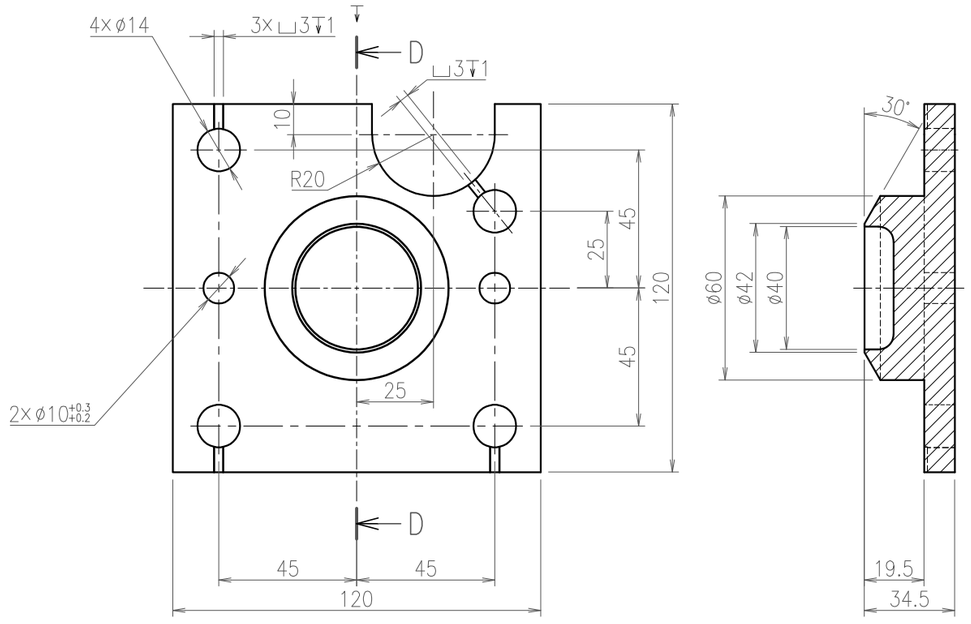

Sectional view D–D

CONNECTING_BASE_TYPE_5

REMARKS		APPROVED	REVIEWED	DRAWN	DATE 2021.11.30	PBS TITLE Diagnostics Poloidal Polarimeter		PROJECTION	SIZE A3
	QST National Institutes for Quantum and Radiological Science and Technology				SCALE 1 : 2	DRAWING TITLE LEMM_CONNECTING_BASE	DRAWING NO. JADA-55342DW0100	SHEET NO. L-43	REVISION 0

Name	Material	Quantity	Remarks
NOZZLE_3/8INCH	SS316LN-IG	8	
THREADEDE_BOSS	SS316LN-IG	8	

General Tolerance : ISO 2768 m-K
Surface roughness not indicated : Ra6.3

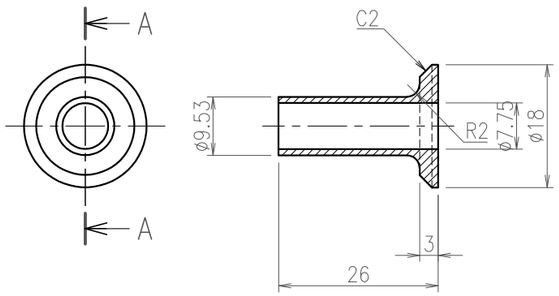

Sectional view A–A

NOZZLE_3/8INCH

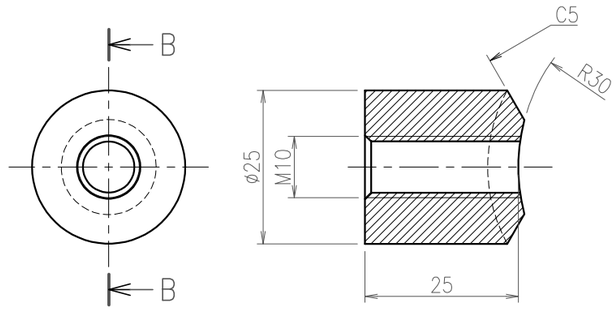

Sectional view B–B

THREADED_BOSS

NOTE
1. This drawing shows the parts of the connecting rod of the LEMM.
2. The ridges and corners should be chamfered(about C0.2), and there should be no burrs.
3. After processing, perform degreasing cleaning.

REMARKS		APPROVED	REVIEWED	DRAWN	DATE 2021.11.30	PBS TITLE Diagnostics Poloidal Polarimeter	PROJECTION	SIZE A3
	QST National Institutes for Quantum and Radiological Science and Technology				SCALE 1 : 1	DRAWING TITLE CONNECTING_ROD_COMPONENT_PARTS	DRAWING NO. JADA-55342DW0100 / SHEET NO. L-44	REVISION 0

General Tolerance : ISO 2768 m-K
Surface roughness not indicated : Ra6.3

Name	Material	Quantity	Remarks
TAB_WASHER_M12	SS316LN-IG	56	
TAB_WASHER_M8	SS316LN-IG	3	
TAB_WASHER_M6	SS316LN-IG	6	
SPECIAL_WASHER_M12	SS316LN-IG	24	
SQUARE_WASHER	SS316LN-IG	64	
REDUCER_TYPE_1	SS316LN-IG	2	
REDUCER_TYPE_2	SS316LN-IG	4	

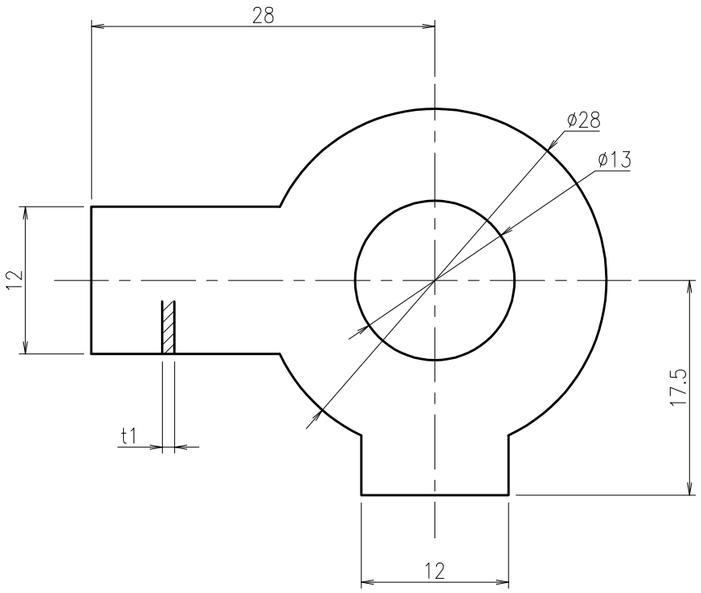

TAB_WASHER_M12

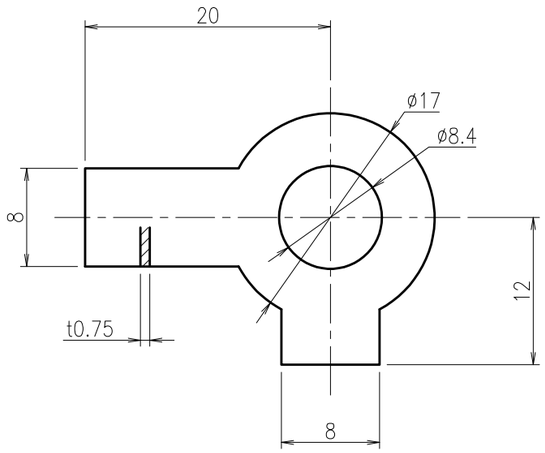

TAB_WASHER_M8

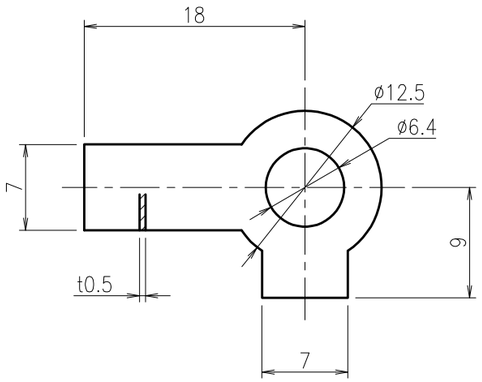

TAB_WASHER_M6

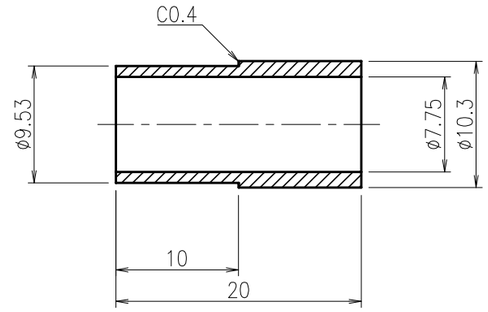

REDUCER_TYPE_1

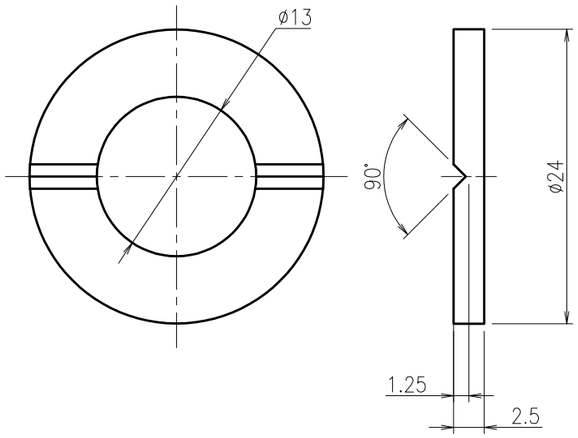

SPECIAL_WASHER_M12

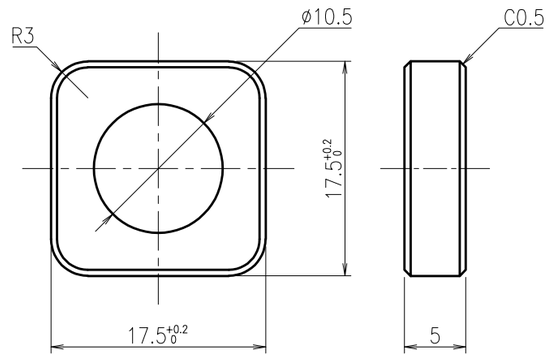

SQUARE_WASHER

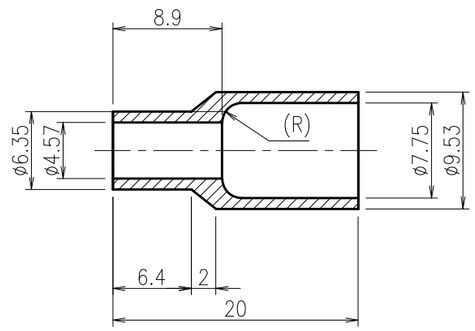

REDUCER_TYPE_2

NOTE
1. The ridges and corners should be chamfered(about C0.2), and there should be no burrs.
2. After processing, perform degreasing cleaning.

REMARKS		APPROVED	REVIEWED	DRAWN	DATE 2021.11.30	PBS TITLE Diagnostics Poloidal Polarimeter	PROJECTION	SIZE A3
	QST National Institutes for Quantum and Radiological Science and Technology				SCALE 2 : 1	DRAWING TITLE LEMM_SPECIAL_ACCESSORIES	DRAWING NO. JADA-55342DW0100	SHEET NO. L-45 / REVISION 0

IO APPROVED BY : VAYAKIS G. DATE : 18 MAR 2022 INTENDED USAGE : FOR TENDER

Name	Material	Quantity	Remarks
LEMM_SUPPLY_EXTENSION_PIPING	SS316LN-IG	1	
LEMM_RETURN_EXTENSION_PIPING	SS316LN-IG	1	

NOTE

1. This drawing shows the extension piping of the cooling water supply piping and return piping of the LEMM.
2. The diameter of the pipe is 10.3 mm and the thickness is 1.24 mm.
3. The bending radius of the pipe is about 35 mm.
4. After processing, perform degreasing cleaning.

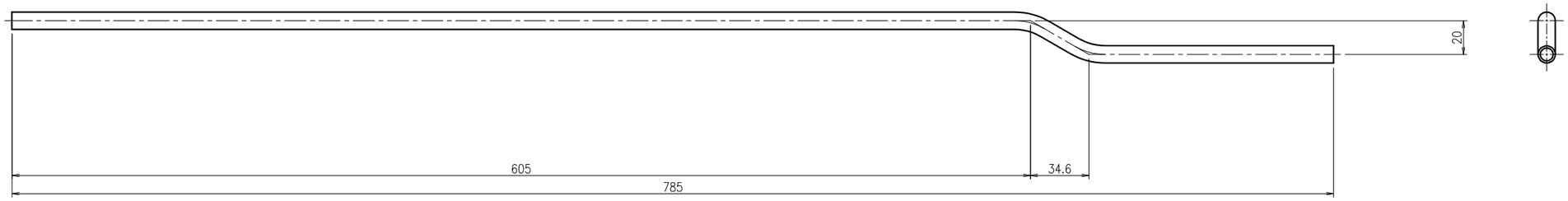

UEMM_SUPPLY_EXTENSION_PIPING

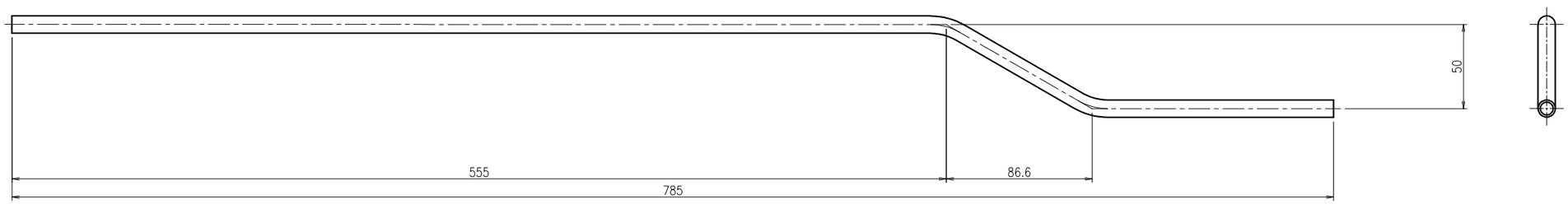

UEMM_RETURN_EXTENSION_PIPING

REMARKS		APPROVED	REVIEWED	DRAWN	DATE 2021.11.30	PBS TITLE Diagnostics Poloidal Polarimeter		PROJECTION	SIZE A3
	QST National Institutes for Quantum and Radiological Science and Technology				SCALE 1 : 3	DRAWING TITLE LEMM_SUPPLY/RETURN_EXTENSION_PIPING	DRAWING NO. JADA-55342DW0100	SHEET NO. L-46	REVISION 0

General Tolerance : ISO 2768 m-K
Surface roughness not indicated : Ra6.3

NOTE
1. This drawing shows the assembly drawing of the parts before processing by the hot isostatic pressing method.
2. The ridges and corners should be chamfered(about C0.2), and there should be no burrs.
3. After processing, perform degreasing cleaning.

No.	Name	Material	Quantity	Remarks
1	HEAT_SINK	CuCrZr	1	
2	SUPPORT_A	SS316LN-IG	1	
3	SUPPORT_B	SS316LN-IG	1	
4	COOLING_PIPE	SS316LN-IG	1	

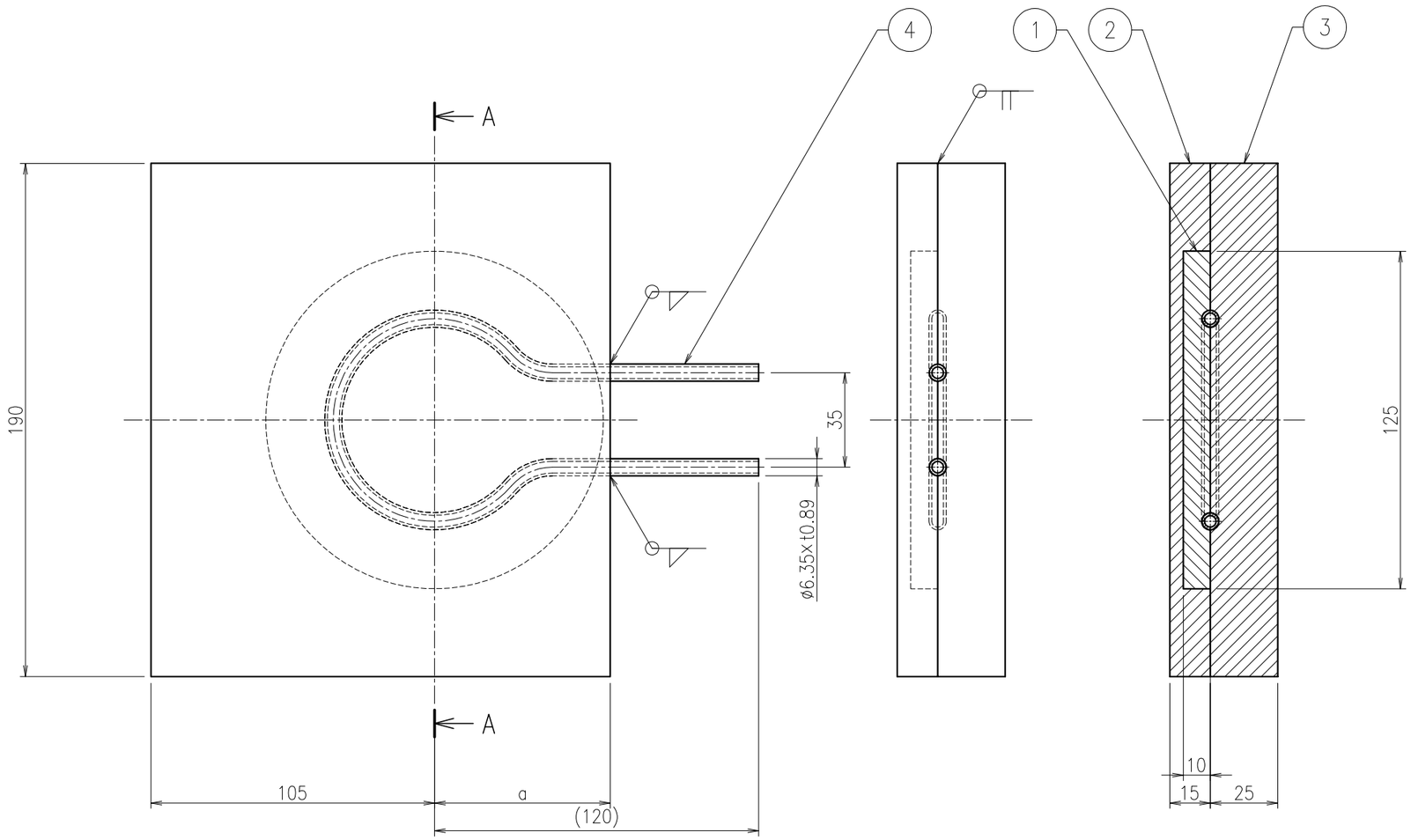

Sectional view A-A

Number of production

Type	Dimension a	Mirror number	Number of production
1	65	M1E2、M1E4、M1E9、M2E9	4set
2	70	M2E3、M2E4	2set
3	73	M2E2	1set
4	75	M1E3	1set

REMARKS		APPROVED	REVIEWED	DRAWN	DATE 2021.11.30	PBS TITLE Diagnostics Poloidal Polarimeter	PROJECTION	SIZE A3
	QST National Institutes for Quantum and Radiological Science and Technology				SCALE 1 : 2	DRAWING TITLE LEMM_HIP_PROCESSING_ASSEMBLY	DRAWING NO. JADA-55342DW0100	SHEET NO. L-47 / REVISION 0

IO APPROVED BY : VAYAKIS G. DATE : 18 MAR 2022 INTENDED USAGE : FOR TENDER

General Tolerance : ISO 2768 m-K
Surface roughness not indicated : Ra6.3

NOTE
1. This drawing shows the parts before processing by the hot isostatic pressing method.
2. The ridges and corners should be chamfered(about C0.2), and there should be no burrs.
3. After processing, perform degreasing cleaning.

No.	Name	Material	Quantity	Remarks
1	HEAT_SINK	CuCrZr	8	
2	SUPPORT_A	SS316LN-IG	See table	
3	SUPPORT_B	SS316LN-IG	See table	
4	COOLING_PIPE	SS316LN-IG	8	

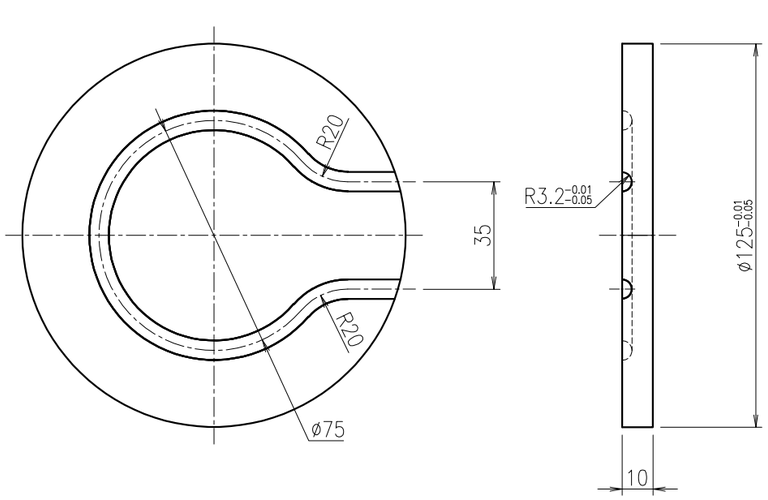

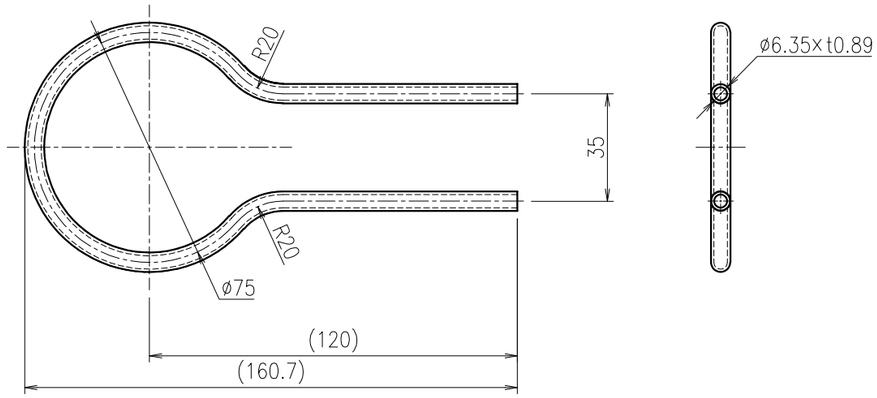

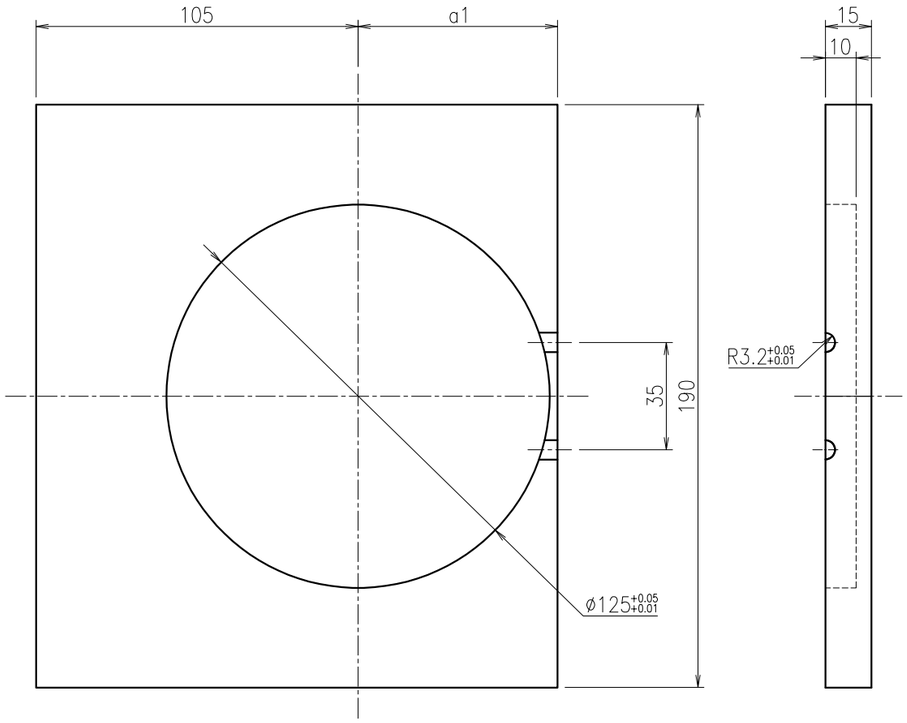

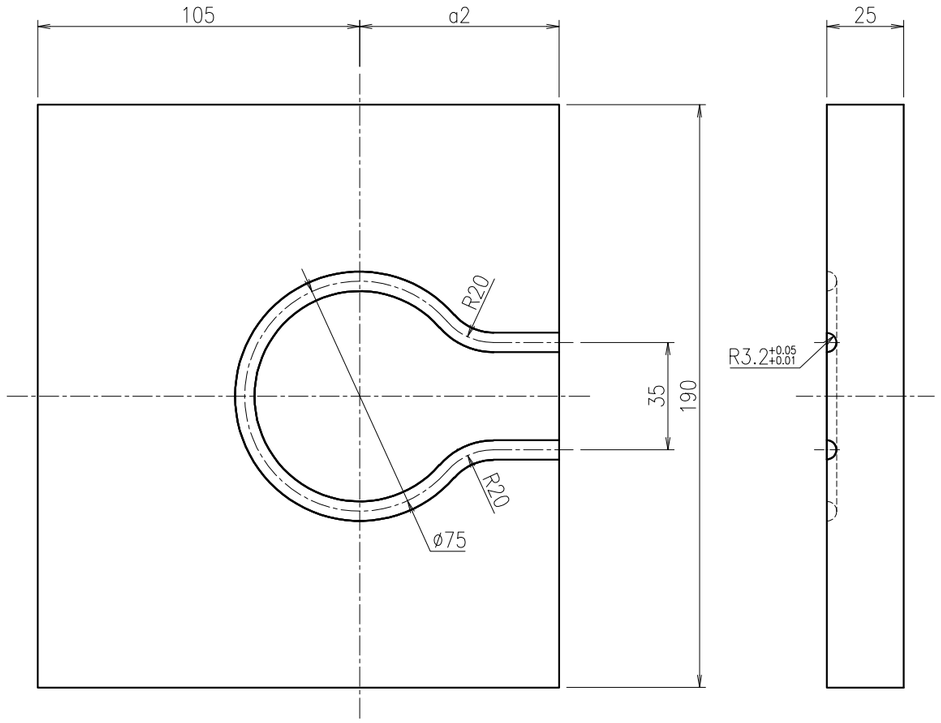

Dimension a1	Quantity
65	4
70	2
73	1
75	1

Dimension a2	Quantity
65	4
70	2
73	1
75	1

REMARKS		APPROVED	REVIEWED	DRAWN	DATE	PBS TITLE	PROJECTION	SIZE
	QST National Institutes for Quantum and Radiological Science and Technology				2021.11.30	Diagnostics Poloidal Polarimeter		A3
					SCALE 1 : 2	DRAWING TITLE LEMM_HIP_PROCESSING_PARTS	DRAWING NO. JADA-55342DW0100	SHEET NO. L-48 / REVISION 0