ITER ブランケット遮蔽ブロック初期組立用
溶接ツールの検証用制御装置の製作

仕　様　書

国立研究開発法人量子科学技術研究開発機構
那珂フュージョン科学技術研究所　炉工学基盤研究開発部
遠隔保守機器開発グループ

目次

1　一般仕様.....3
1.1　件名.....3
1.2　目的及び概要.....3
1.3　契約範囲.....3
1.4　作業実施場所.....4
1.5　納入物件及び納入条件.....4
1.6　提出図書.....5
1.7　検査条件.....5
1.8　支給・貸与品.....5
1.9　品質保証.....6
1.9.1　一般事項.....6
1.9.2　本件に係る品質保証.....6
1.9.3　品質保証に関する情報の提供等.....6
1.9.4　提出図書について.....6
1.10　適用法規等.....7
1.11　打合せ.....8
1.12　知的財産権等・技術情報の取り扱い・成果の公開.....8
1.13　情報セキュリティの確保.....9
1.14　コンピュータプログラム.....9
1.15　CFSI の発生防止と検知及び取扱い.....9
1.16　グリーン購入法の推進.....10
1.17　協議.....10
2　技術仕様.....11
2.1　略語.....11
2.2　適用図書及び参考図書.....13
2.3　検討対象となる BM 及びツールと作業プロセス.....16
2.3.1　ブランケットモジュール仕様.....16
2.3.2　初期組立作業時に使用されるツール.....21
2.3.3　SB 保守内容.....22
2.3.3.1　CCWT による溶接作業工程.....22
2.4　設計仕様.....24
2.4.1　CCWT の設計仕様.....24
2.4.2　制御装置.....28
2.4.3　プロトタイプ BM 保守ツール設計全般の要求事項.....34
2.4.3.1　軽量ツール及び重量ツールに適用される要求事項.....34
2.4.3.2　重量ツールに適用される要求事項.....34
2.4.3.3　軽量ツールに適用される要求事項.....34

2.4.4 SB保守ツール運用に係る機器との取合い..... 35
2.4.4.1 BAT 35
2.4.4.2 BMTS 35
2.4.4.3 BMTS収納板の設計制約 36
2.4.4.4 IVTC及びナセル 37
2.4.4.5 ZERO G Arm 37
2.5 検証用制御装置及び検証用架台の設計..... 39
2.5.1 ツール検証用制御装置における制御システム及びソフトウェアの設計 39
2.5.2 ツール検証用架台の設計 41
2.6 検証用制御装置及び検証用架台の製作..... 41
2.7 検証用制御装置及び検証用架台の機能確認試験..... 41
2.8 図書類の作成..... 41

別紙1 イーター調達取決めに係る品質保証に関する特約条項
別紙2 知的財産権特約条項
別紙3 イーター実施協定の調達に係る情報及び知的財産に関する特約条項
別紙4 本契約において遵守すべき「情報セキュリティの確保」に関する事項
別紙5 コンピュータプログラム作成等業務特約条項
別紙6 Technical Specification for Blanket First Assembly Tooling (ITER_D_2F6S75 v2.2)
別紙7 Blanket First Assembly Tooling Requirements (ITER_D_2F6UJT v2.0)

1　一般仕様

1.1　件名

ITER ブランケット遮蔽ブロック初期組立用溶接ツールの検証用制御装置の製作

1.2　目的及び概要

国立研究開発法人量子科学技術研究開発機構（以下「QST」という。）は、ITER 機構（以下「IO」という。）と締結した調達取決めに基づき、ITER ブランケット遠隔保守システム（Blanket Remote Handling System、以下「BRHS」という。）及びブランケット初期組立用機器の開発を進めている。BRHS は、放射線環境下となる真空容器内（Vacuum Vessel, 以下「VV」という。）において、遠隔操作によるブランケットモジュール（Blanket Module, 以下「BM」という。）の交換を行う。ブランケット初期組立用機器は、ITER 建設活動の一部として非放射線下における BM の据付作業に用いられる。

BM は、第一壁（First Wall, 以下「FW」という。）と遮蔽ブロック（Shield Block, 以下「SB」という。）から構成され、SB は VV 上に、FW は SB 上に固定される。SB を VV 上に取り付ける際には、SB を VV 上に設置して各種ボルトを締め付けた後、各種冷却水配管構造を溶接により接続することで、SB を VV に固定する。SB を VV から取り外す際には、各種冷却配管構造を切断して切り離し、各種ボルトを緩めることで SB と VV の接続を解除し、SB を搬出させる。また BM は上記の FW と SB から構成される基本形状の他に、ポロイダル 15 番の位置にある NB ポート近傍には FW と SB が一体となった特殊形状のモジュール（「15ND 系モジュール」と呼ぶ。）が存在する。基本形状の SB 用ツールに加えて、このモジュールの据付作業に用いる専用のツールが必要である。

本契約では、IO に納入する予定の SB の初期組立に用いる溶接ツールのための、検証用制御装置及び検証用架台の設計、製作及び機能確認試験を実施する。本契約で製作した検証用制御装置及び検証用架台は、将来的に IO へ納入する想定である。

1.3　契約範囲

本件では、以下の作業を実施する。

(1)　検証用制御装置及び検証用架台の設計
(2)　検証用制御装置及び検証用架台の製作
(3)　検証用制御装置及び検証用架台の機能確認試験
(4)　図書類の作成

本件の制御対象となるツールを以下に示す。

(a)　同軸コネクタ溶接ツール（Coaxial Connector Welding Tool, 以下「CCWT」という。）

1.4　作業実施場所

受注者事業所内

1.5　納入物件及び納入条件

(1)　納期及び納入物件

(a)　表 1 における#1～#4：製作着手 2 週間前

(b)　表 1 における#5 及び表 2：令和 9 年 3 月 19 日

(c)　表 3：表 3 に記載の提出時期のとおり

(2)　納入場所

(a)　装置類：受注者事業所内

(b)　図書類：QST　那珂フュージョン科学技術研究所　ITER 研究開発棟　R134 室

(3)　納入条件：持込渡し

(4)　確認方法：QST は、確認のために提出された図書（表 1 及び表 3）において「確認：要」の図書を受理したときは、期限日を記載した受領印を押印して返却する。また、当該期限までに確認を完了し、受理しない場合には修正を指示し、修正等を指示しないときは、確認したものとする。ただし、「再委託承諾願」は、QST の確認後、書面にて回答するものとする。

図書に関する提出方法は、紙媒体(各 1 部)の他、電子ファイル(正式版の PDF ファイルに加えて Microsoft Word, Excel, Power Point ファイルなど編集可能な元ファイル)を CD などの記録媒体に格納して持込渡しにて提出すること。

なお、使用言語は表内に示す言語欄に従うこととするが、日本語で作成する図書においても図表のキャプションは原則英語で表記すること。

表 1　納入物（図書）

#	納入物名	言語	部数	確認
1	Cabling Diagram (CBD)	英	1 部	要
2	Detailed Wiring Diagram (WD)	英	1 部	要
3	Single Line Diagram 又は One Line Diagram	英	1 部	要
4	Test Tool Bench Outline Drawing	英	1 部	要
5	納入物に関わる電子ファイルを納めた CD	-	1 式	不要

表 2　納入物（物品類）

#	品名	英名	数量
1	ツール検証用架台	Test Tool Bench	1 台
2	ツール検証用制御装置	Test Tool	1 式

	(Skid mode 用リモートコントローラ１台、ローカルコントローラ１式、ポータブルコントローラ１台、その他制御関連ケーブル等必要機器を実装したもの)	Control System	

1.6　提出図書

受注者は、表 3 に示す図書を作成し提出すること。提出方法は、紙媒体(各 1 部を郵送)の他、電子ファイル(PDF ファイルをメール送付)を提出すること。なお、使用言語は表の言語欄に従うこととする。

表 3　提出図書

納入物名	提出時期	言語	部数	確認
作業体制表及び詳細工程表	契約締結後速やかに	日	1 部	要
打合せ議事録	打合せ後 2 週間以内	日	1 部	要
再委託承諾願 (QST 指定様式)	作業開始 2 週間前 ※下請負等がある場合に QST 指定書式にて提出のこと。	日	1 部	要

1.7　検査条件

1.5 項に示す納入物及び 1.6 項に示す提出図書がそれぞれ納入又は提出され、本仕様書に定める業務が実施されたと QST が認めたこと、及び 1.8 項(1) に定める貸与品が返却されたことをもって検査合格とする。

1.8　支給・貸与品

支給品及び貸与品については、契約条項のとおりとする。なお、QST が支給品及び貸与品の所在等の確認を求めた場合には、受注者はこれに協力するものとし、紛失等の異常時には速やかに報告することとする。

(1)　貸与品（いずれも無償）

(a)　2.2 項に示す適用図書：一式

(2)　引渡場所及び方法

・(a)：QST　那珂フュージョン科学技術研究所　ITER 研究開発棟　R134 室にて手渡し又は郵送（着払い）

・(b)：受注者工場にて引き渡し

(3)　返却方法

納期までに、1.5 項(2)(b)に示した納入場所へ手渡し・メール送付・受注者負担による郵送のいずれかによる。

1.9　品質保証

1.9.1　一般事項

(1)　受注者は、下記に示す項目を保証するよう適切な品質システムを遂行すること。

(a)　契約要求事項に実施内容が合致していること。

(b)　規格等に準拠していることを示す証拠が維持/保存されること。

(2)　受注者の遂行する上記の品質システムは下記を満たすこと。

(a)　契約に基づき実施される設計等すべての行為を網羅するものであること。

(3)　受注者は、再委託先についても有効な品質システムを備えることを保証すること。再委託先業者がこれを満たさなかった場合、受注者は再委託先の施設などにおいて品質を確立/維持するために必要な全ての活動の責任を負うものとする。

1.9.2　本件に係る品質保証

品質保証については、別紙1「イーター調達取決めに係る品質保証に関する特約条項」に定められたとおりとする。

なお、ブランケット遠隔保守ツール類の品質等級は「クラス2 (SR/NSR)」であるが、本契約の初期組立用機器においては「クラス3 (NSR)」として扱う。

1.9.3　品質保証に関する情報の提供等

(1)　本仕様に関し、QST(IO 含む)は、受注者に対し検討内容の進捗状況の報告依頼を書面にて通知することにより、受注者(受注者の再委託先も含む)の施設などにおいて、作業の進捗状況確認及び試験検査に立ち会う権利を有するものとする。なお、上記を実施する日時については協議の上決定する。

(2)　受注者(受注者の再委託先も含む)は、QST(IO 含む)に対し、その要求があった場合、本契約の適切な管理運営を証明するために必要な文章及びデータを提供又は提示するものとする。

1.9.4　提出図書について

(1)　提出図書の文書管理

文書管理は、受注者の品質マネジメントシステムに従うものであるが、それに加えて以下に定める文書番号及び電子版の送付方法に従うこと。提出図書には、JADA文書番号を付与するとともに文書番号を管理すること、文書番号の付け方及び送付方法は下記に従うこと。なお、PDF形式の提出図書には、JADAの文書番号を表紙右上に記載すること。JADA文書番号を付与した図書の電子ファイル名は、JADA文書番号 「JADA-2316X-」から始めること。

(JADA文書番号の例)

JADA文書番号は「JADA-2316X-YYZZ3xxx-r」という様式である。

上述の「X」「YY」は契約締結後にQSTから提示する。

「ZZ」は表 4 に示す分類記号（JADA 文書番号下線朱書き太字箇所）、「xxx」は通し番号、「r」は改訂記号である。

表 4　提出図書の分類記号（ZZ）

図書名	JADA 文書番号
工程表	JADA-2316X-YY**WS**3xxx
打合せ議事録	JADA-2316X-YY**MI**3xxx
各種報告書 （月間報告書等（設計、試作・製作、試験検査報告書は除く））	JADA-2316X-YY**PR**3xxx
設計報告書	JADA-2316X-YY**DE**3xxx
図面	JADA-2316X-YY**DW**3xxx
逸脱許可	JADA-2316X-YY**DR**3xxx
不適合の報告	JADA-2316X-YY**NR**3xxx
全般的な資料	JADA-2316X-YY**GD**3xxx
連絡票	JADA-2316X-YY**NO**3xxx
報告書の技術的根拠となった技術資料、データ	JADA-2316X-YY**TS**3xxx

(2)　提出図書の輸出管理

提出図書及び打合せ資料の IO への技術提供に関しては、受注者として必要な輸出管理を行い、QST から IO への図書及び資料の提供が遅滞なく行えるようにすること。

1.10　適用法規等

- 初期組立ツール及びエンドエフェクタは、「部分完成品(Partly completed machinery)」として以下の指令に準拠しなければならないため、本仕様における検証用制御装置においても必要な範囲について考慮の上設計製作を行うこと。
  - 電磁両立性（EMC）指令 2014/30/EU
  - 低電圧指令（LVD）2014/35/EU
  - 機械規則 2023/1230/EU
  - RoHS 指令 2011/65/EU

- 設計に適用される ITER 設計ハンドブックは以下のとおり。
  - Electrical Design Handbook（EDH）（適用図書[29]～[34]）
  - Remote Handling Control System Design Handbook（適用図書[35]）。ただし、以下のセクションは除外される。
    - 2.2 Standard parts

- 2.5 RH Control Room
- 2.6 Cubicle Rooms, Cabling Connectors
- 2.10 Operation Viewpoints
- 6 Hazard identification and risk assessment

1.11 打合せ

打合せの実施にあたっては、以下の要領に従うこと。

(1) QST との打合せ

(a) 受注者は、原則として月に 1 回以上の頻度で QST 担当者と打合せを実施すること。QST 那珂フュージョン科学技術研究所への来所による対面打合せ又はリモート打合せによる。

(b) アクションリストを作成し管理すること。打合せ前にアクションリストの改訂版を提出すること。

(c) 打合せにおいて、最新版の工程表(及び MS project ファイル)を提出すること。

(d) 打合せ後 2 週間以内に受注者内で審査及び承認された議事録を提出し、QST の確認を受けること。

(2) IO との打合せ

(a) QST は IO と月に 1 回程度進捗会合を実施している。受注者は、進捗会合にリモート参加し、必要に応じて技術情報の説明を行うこと。

(b) 受注者は、打合せまでに実施した検討作業について、IO との協議に使用するための各種資料（英語）の作成を行うこと。なお、作成に当たっては QST 担当者と協議を行い、ヒアリング及び協議実施前に都度合意を得ること。

(c) 本会議の議事録作成は不要とする。

1.12 知的財産権等・技術情報の取り扱い・成果の公開

(1) 知的財産権等の取扱い

知的財産権の取扱いについては別紙 2「知的財産権特約条項」及び別紙 3「イーター実施協定の調達に係る情報及び知的財産に関する特約条項」に定められたとおりとする。

(2) 技術情報の取り扱い

(a) 受注者は、本契約を実施することによって得た技術情報を第三者に開示しようとするときは、あらかじめ書面による QST の承認を得なければならないものとする。

(b) QST が本契約に関し、その目的を達成するため受注者の保有する技術情報を了知する必要が生じた場合は、QST と受注者協議の上、決定するものとする。

(3) 成果の公開

受注者は、本契約に基づく業務の内容及び成果について、発表若しくは公開し又は特定の第三者に提供しようとするときは、あらかじめ書面による QST の承認を得なければならないものとする。

1.13 情報セキュリティの確保

情報セキュリティの確保については、別紙4「本契約において遵守すべき『情報セキュリティの確保』に関する事項」に示すとおりとする。

1.14 コンピュータプログラム

本契約におけるコンピュータプログラムの取り扱いについては、別紙5「コンピュータプログラム作成等業務特約条項」に定められたとおりとする。

1.15 CFSI の発生防止と検知及び取扱い

受注者は、偽造品、不正品及び疑惑品（CFSI）について管理を行うこと。

- 偽造品とは、法的な権利又は権限を持たない複製品または代替品、又は、その材料、性能、特性を、販売業者、供給業者、商社、製造業者によって、故意に虚偽の表示をさせたもの。
- 不正品とは、事実と異なるものが意図的に偽って表示された物品。
- 疑惑品とは、外観検査、試験、又はその他の情報により、確立された業界で受け入れられている仕様又は国内/国際規格に準拠していることが確認できない可能性がある兆候があるもの。

偽造品、不正品及び疑惑品（CFSI）について予防、検出、処理するための対策を講じるものとする。

その際には以下の事項を考慮すること。

(1) CFSI は、イータープロジェクトのために調達するすべての製品の全てのライフサイクル段階で検出できる。

(2) CFSI は、イータープロジェクトに関与するすべての関係者によって検出できる。CFSI の検出時には、予定外の検査、サンプルの独立した分析、証明書の検証などの適切な手段を用いる。
ただし、CFSI を検出していない関係者に対してまで“予定外の検査”や“サンプルの独立した分析”などの追加作業は要求しない。

No	検出段階	検出場所	検出者
1	受注者文書の受領・レビュー	QST の施設	QST 要員
2	製作及び役務作業	QST の施設、受注者の工場等	QST 要員、受注者
3	検査及び試験作業	QST の施設、受注者の工場等	QST 要員、受注者
4	調達製品及び役務の検証	QST の施設、受注者の工場等	QST 要員
5	組立作業	QST の施設、受注者の工場等	QST 要員、受注者
6	受注者の品質管理	受注者の工場等	QST 要員
7	受注者監査	QST の施設、受注者の工場等	QST 要員
8	外部組織からの通知・警告	QST の施設、受注者の工場等	ASNR、その他の外部組織、メディア

(3)　CFSI を検出した関係者は、直ちに QST に報告する。

(4)　検出した CFSI ケースが特定/評価され、ITER プロジェクトへの影響が確認された場合、CFSI 発生元は、より詳細な調査(根本原因分析(RCA))を進め、さらなる是正措置及び予防措置を特定するため、重大 NCR を発行する。
CFSI に関する NCR は、「Procedure for management of Nonconformities (22F53X)」に従って処理する。

(5)　CFSI 発生元が、進行中の QST との契約に関与しており、契約解除が ITER プロジェクトに重大な影響を与える場合、CFSI　発生元が信頼性を回復するため詳細なアクションプランを作成し、QST に提出する。

1.16　グリーン購入法の推進

(1)　本契約において、グリーン購入法（国等による環境物品等の調達の推進等に関する法律）に適用する環境物品（事務用品、OA 機器等）が発生する場合は、これを採用するものとする。

(2)　本仕様に定める提出図書（納入印刷物）については、グリーン購入法の基本方針に定める「紙類」の基準を満たしたものであること。

1.17　協議

本仕様書に記載されている事項及び本仕様書に記載のない事項について疑義が生じた場合は、QST と協議の上、その決定に従うものとする。

2　技術仕様

受注者は、2.1～2.4 項に示す内容を十分理解し、2.5 項以降に示す作業を実施すること。

2.1　略語

本件における略語を表 5 に示す。

表 5　略語一覧

略語	正式名称	日本語訳
15NDESB	15ND Electrical Strap Bolt	15ND 電気ストラップボルト
15NDFBT	15ND Flexible Bolt torquing Tool	15ND フレキシブルボルト締結ツール
15NDG	15ND Gripper	15ND 把持機構
15NDTB	15ND Tool Base	15ND ツールベース
AVC	Arc Voltage Control	アーク電圧制御
BAT	Blanket Assembly Transporter	ブランケット組立運搬機
BM	Blanket Module	ブランケットモジュール
BMTS	Blanket Module Transfer System	ブランケット運搬システム
BRHS	Blanket Remote Handling System	ブランケット遠隔保守システム
BTSE	Blanket Tooling Supporting Equipment	ブランケットツール向け支援装置群
CB	Central Bolt	セントラルボルト
CC	Coaxial Connector	同軸コネクタ
CCCT	Coaxial Connector Cutting Tool	同軸コネクタ切断ツール
CCWT	Coaxial Connector Welding Tool	同軸コネクタ溶接ツール
C&C	Command and Control	コマンドアンドコントロール
EC	End Cap	（冷却水経路端の）蓋
ECWT	End Cap Welding Tool	蓋溶接ツール
ECCT	End Cap Cutting Tool	蓋切断ツール
EE	End Effector	エンドエフェクタ
ESB	Electrical Strap Bolt	電気ストラップボルト
FAT	Factory Acceptance Test	工場受入試験
FB	Flexible Bolt	フレキシブルボルト
FBT	Flexible Bolt Tool	フレキシブルボルト締結ツール

FS	Flow Separator	水流分離器
FW	First Wall	第一壁
FWESB	First Wall Electrical Strap Bolt	第一壁電気ストラップボルト
HLCS	High-Level Control System	上位制御系
HMI	Human Machine Interface	ヒューマンマシンインターフェイス
IVTC	In-Vessel Tower Crane	真空容器内搭形クレーン
LLCS	Low-Level Control System	下位制御系
MC	Monoaxial Connector	単軸コネクタ
MCAMT	Monoaxial Connector Alignment Measurement Tool	単軸コネクタ位置測定ツール
MCCT	Monoaxial Connector Cutting Tool	単軸コネクタ切断ツール
MCPT	Monoaxial Connector Pulling Tool	単軸コネクタ引込みツール
MCWT	Monoaxial Connector Welding Tool	単軸コネクタ溶接ツール
NTS	Nacelle Tool Storage	ナセルツール収納部
PFT	Pipe Facing Tool	配管端面加工ツール
PHS	Passive Holding System	受動把持機構
PR	Pulling Rod	引込みロッド
SB	Shield Block	遮蔽ブロック
SBESB	Shield Block Electrical Strap Bolt	遮蔽ブロック電気ストラップボルト
SBG	Shield Block Gripper	遮蔽ブロック把持機構
SBTB	Shield Block Tool Base	遮蔽ブロックツールベース
TFU	Tool Fixing Unit	ツール固定部
TFW	Temporary First Wall	仮第一壁
TMNP	Tool Manipulator	ツールマニピュレータ
TPTS	Through Port Transfer System	直通ポート運搬システム
TSR	Tool Storage Rack	ツール収納ラック
TSS	Tooling Services Skid	ツール用ユーティリティ供給装置
UHS	Umbilical Handling System	ツール用ケーブル送給装置
UTC	Umbilical Temporary Clamp	ツール用ケーブル仮留め具
VMNP	Vehicle Manipulator	ビークルマニピュレータ
VV	Vacuum Vessel	真空容器

2.2　適用図書及び参考図書

本件で適用すべき図書を表 6 に、参考にすべき図書を表 7 に示す。

表 6　適用図書

#	図書名	文書番号
1	ITER 第一壁及び遮蔽ブロックの遠隔保守ツール設計製作仕様	JADA-23160TS0001-4
2	IS-16-23-002 Interface between Shield Block (PBS 16.SB) and Blanket Remote Handling System (PBS 23.01)	ITER_D_33TYJV v5.1
3	Technical Specification for Blanket First Assembly Tooling	ITER_D_2F6S75 v2.2
4	Blanket First Assembly Tooling Requirements	ITER_D_2F6UJT v2.0
5	設計報告書 (Shield Block Tool Base)	JADA-23162-07DE3001
6	3D CAD MODEL - TOOL_BASE_07A	JADA-23162-07DW3014
7	3D CAD MODEL - TOOL_BASE_11B	JADA-23162-07DW3015
8	3D CAD model of SB	DET-03305-X
9	ITER Vacuum Handbook	ITER_D_2EZ9UM v2.5
10	ITER Vacuum Handbook Attachment 1 - Welding	ITER_D_2FMM4B v1.5
11	ITER 遮蔽ブロック遠隔保守ツールの予備設計 設計報告書	JADA-23162-04DE3002
12	Blanket modules dimensions and weight	ITER_D_35ZJNQ v16.1
13	CAD model of Temporary FW	DET-03305-W
14	CAD model of SB15ND series	DET-08890
15	CAD model of SB14ND series and SB16NB series	DET-08054-A
16	CAD model of Tool Changer	DET-03305-U
17	List of SB GAD Drawings	ITER_D_CKA4A3 v1.0
18	PA CN for PA 1.6.P1B.CN.01 for SB18 row unified water connector dimensions	ITER_D_ATWFX4 n/a
19	2D: Electrical strap interface to SB	ITER_D_UG4FBK v1.0
20	Electrical strap: BKT_ES_14LAYERS_SB	DRW Nr: 028123 --J
21	2D: Flexible interface to SB	ITER_D_UGC3KZ v1.0
22	FCB Inboard: BKT_FC_IB_BEFORE_CUSTO	DRW Nr: 023426 --E
23	FCB Outboard: BKT_FC_IB_BEFORE_CUSTO	DRW Nr: 037672 --B
24	2D: SB insert	ITER_D_UGCBHL v1.0
25	Coaxial and monoaxial: BKT_MABA_HYDRAULIC_CONNECTION	DRW Nr: 025795 --E

26	FW central bolt: BKT_FW_CENTRAL_BOLT	DRW Nr: 055948 --E
27	Cap system:	DRW Nr: 057740 --A DRW Nr: 074421
28	2D: BKT_MODULE_15_S03 (15ND series)	DRW Nr:062819 --A
29	Electrical Design Handbook (EDH)	以下参照
30	EDH Part 1 Introduction	ITER_D_2F7HD2 v1.4
31	EDH Part 2 Terminology & Acronyms	ITER_D_2E8QVA v1.4
32	EDH Part 3 Codes & Standards	ITER_D_2E8DLM v1.3
33	EDH Part 4 Electromagnetic Compatibility (EMC)	ITER_D_4B523E v3.0
34	EDH Part 5 Earthing and Lightning Protection	ITER_D_4B7ZDG v3.0
35	Remote Handling Control System Design Handbook	ITER_D_2EGPEC v3.0

表 7　参考図書

#	図書名	文書番号
1	2D model - Coaxial and Monoaxial	ITER_D_VNVAFB v1.1
2	2D model - FW electrical strap 14 layers	ITER_D_W2AZVZ v1.0
3	2D model - SB#05 Type A	ITER_D_LYDJ28 v2.0
4	Blanket Design Description Document	ITER_D_EBUDW3 v1.2
5	2D model - FW central bolt	ITER_D_W263HM v1.0
6	3D CAD model of SB14ND series and SB16NB series	DET-08054-A
7	Electrical strap to SB built-up	ITER_D_U4NRQU v2.0
8	Memorandum on blanket welding gas	ITER_D_UAMBY3 v1.0
9	2D model - Centering Pads to SB Interface	ITER_D_UFFXQK v2.0
10	2D: Electrical strap interface to SB	ITER_D_UG4FBK v1.0
11	2D: IMK pads interfaces to SB	ITER_D_UGBZ4X v1.0
12	2D: Electrical strap	ITER_D_VNV4AB v1.0
13	SB ES Tolerance Built-up	ITER_D_X86NTS v1.2
14	D2:C23TD64FJ Summarized results of the survey	ITER_D_XYSCCN v1.0
15	D3:C23TD64FJ Engineering design report on Gripping Adapters for normal SBs	ITER_D_YNNTBZ v1.1
16	2D: BKT_MODULE_15_S03 (15ND series)	DRW Nr:062819
17	AA04-1100 316 L(N)-IG Composition	ITER_D_22KCMF_v2.3

2.3　検討対象となるBM及びツールと作業プロセス

2.3.1　ブランケットモジュール仕様

VVには赤道面ポート（Equatorial Port、以下「EP」という。）が18個ある(正規ポート14個、不規則ポート4個)。すべての正規ポートは同寸法で、プラズマ計測、テストBM、電子・イオンサイクロトロン加熱（ECH・ICH） 等の異なるシステムに割り当てられている（図1上)。不規則ポートには、中性粒子ビーム入射装置が割り当てられており、この領域のVV及びポート開口部は複雑な形状になっている。

VV内に配置されるBMは、図 1～図 3に示す通りSB及びFWからなる二層構造になっている。SBはVV上に固定され、FWはSB上に固定される（FW保守ツールは本契約の対象外とする)。

各SBはフレキシブルカートリッジ及びキーを介してVVに取り合わせられ（図 4)、電気ストラップボルト（ESB）を締結後にフレキシブルボルト（FB, 図 5）を締結することで、SBはVV上に固定される。その後、VVに設置された同軸コネクタ（CC,図 6）又は単軸コネクタ（MC, 図 7）をSB配管構造の開先（SB stub,図 6・図 7内参照）に溶接により接続した後、水流分離器（FS）とSBを溶接して接続することで、冷却水流路を構築する。その後、FWをSB上に固定する。

SBをVVから取り外す際は、FSとSBを切削により切り離してFSを取り除き、CC/MCとSB stubを切断により切り離す。その後、FB及びESBを緩めてSBとVVの接続を解除し、SBをVVから引き抜く作業を行う。SBの取り外し後、CC/MCの端面を垂直断面に加工する（新しいSBのSB stubと再溶接するために実施する)。

SB及びFWは各18種類の基本形状で構成されている。また、中性粒子ビームポート（NB Port）などの各種ポート周辺には、18種類の基本形状BMとは細部が異なる形状のBM（「バリアント」と呼ぶ）がある他、単体構造の特殊形状モジュール（SB#15ND、SB#15NDA、SB#15NDBがあり、これらをまとめて本仕様書内では「15ND系モジュール」と呼ぶ。図 1及び図 8参照）が配置される構造となっている。15ND 系モジュールについても専用の保守ツールを用いて保守作業を行い、交換することが要求される。

本契約では、SB の初期組立に用いる各種ツール及び関連装置の内、溶接ツールにおける検証用制御装置及び検証用架台の設計、製作及び機能確認試験を実施する。2.3.3項に下記のツール及び関連装置に関係するSB保守手順の詳細を示す。

(1)　同軸コネクタ溶接ツール（Coaxial Connector Welding Tool, 以下「CCWT」という。）

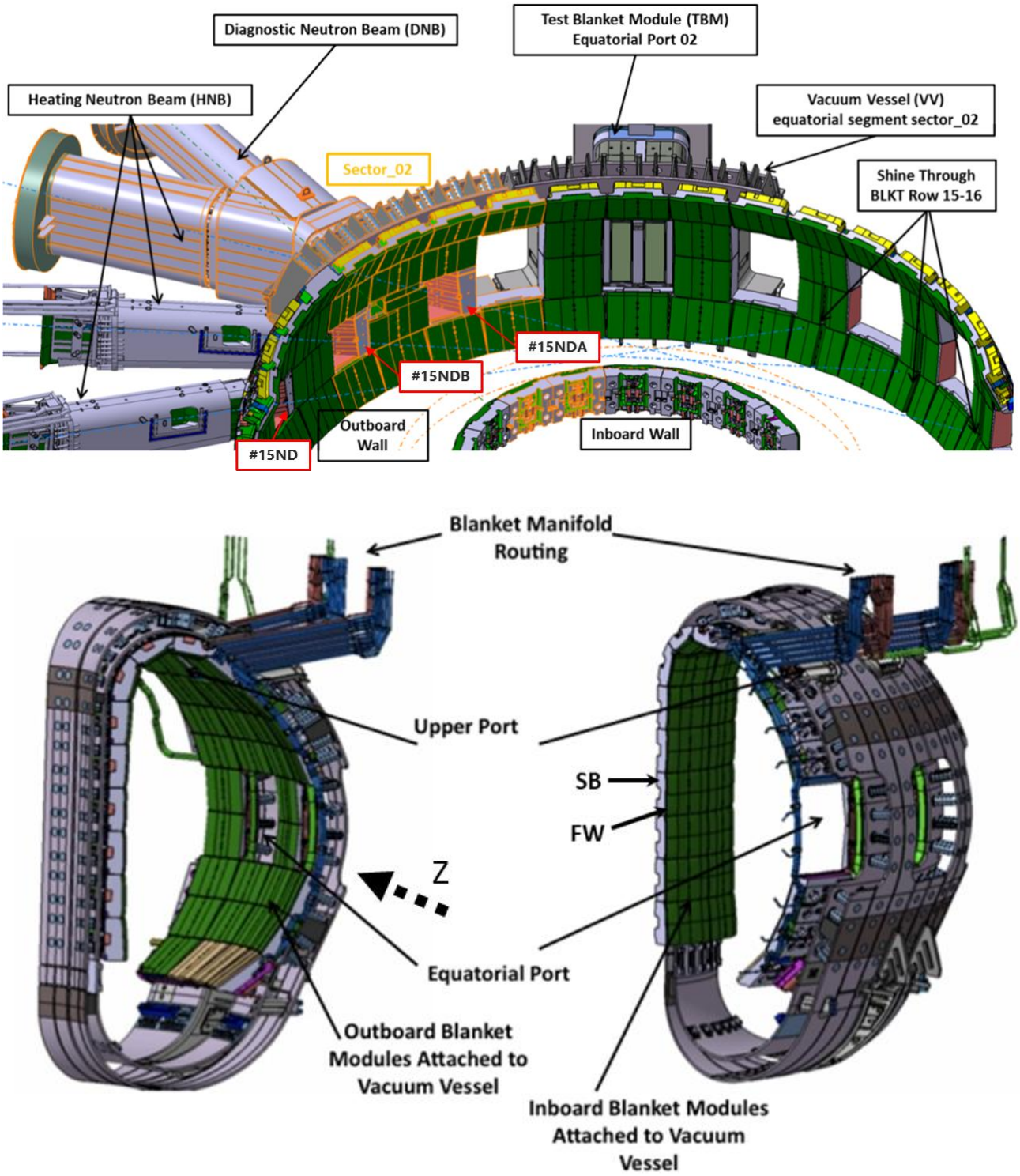

図 1　真空容器(VV)内の BM 構成

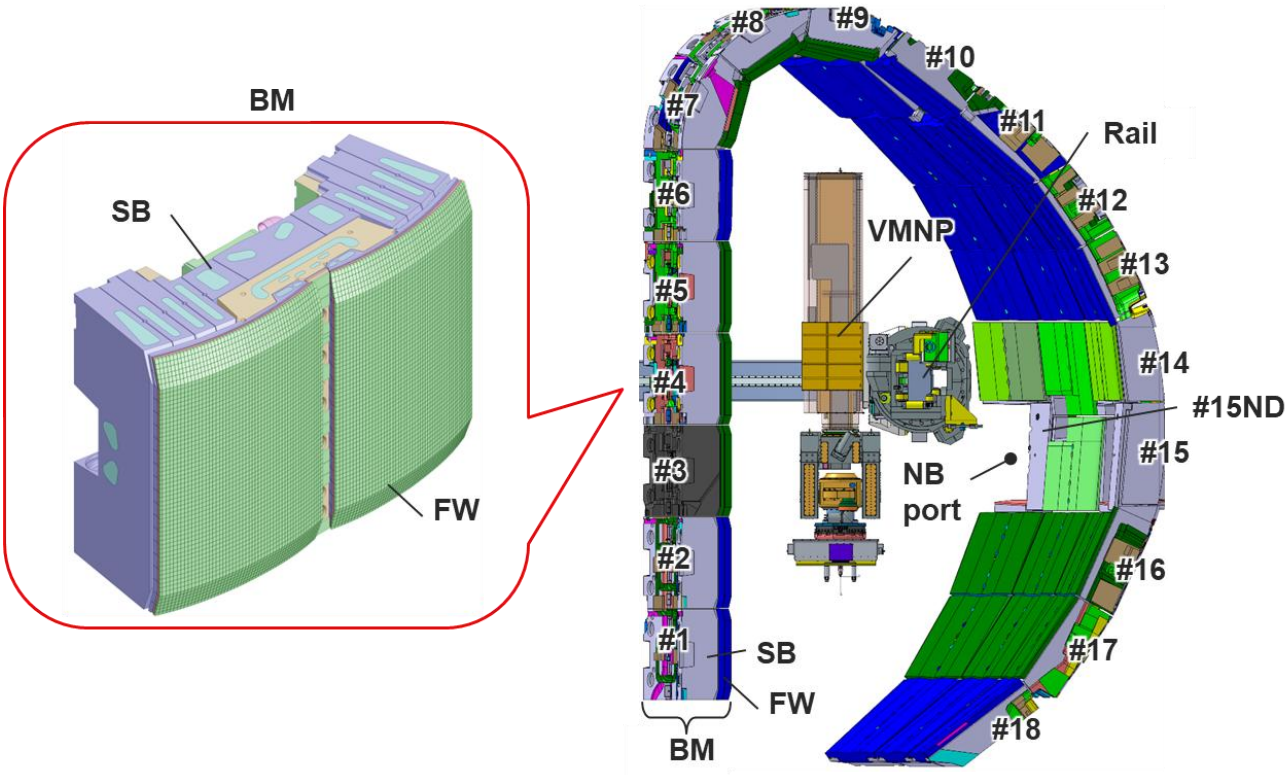

図 2　真空容器(VV)の断面図及び BM(SB+FW)#4 の外形

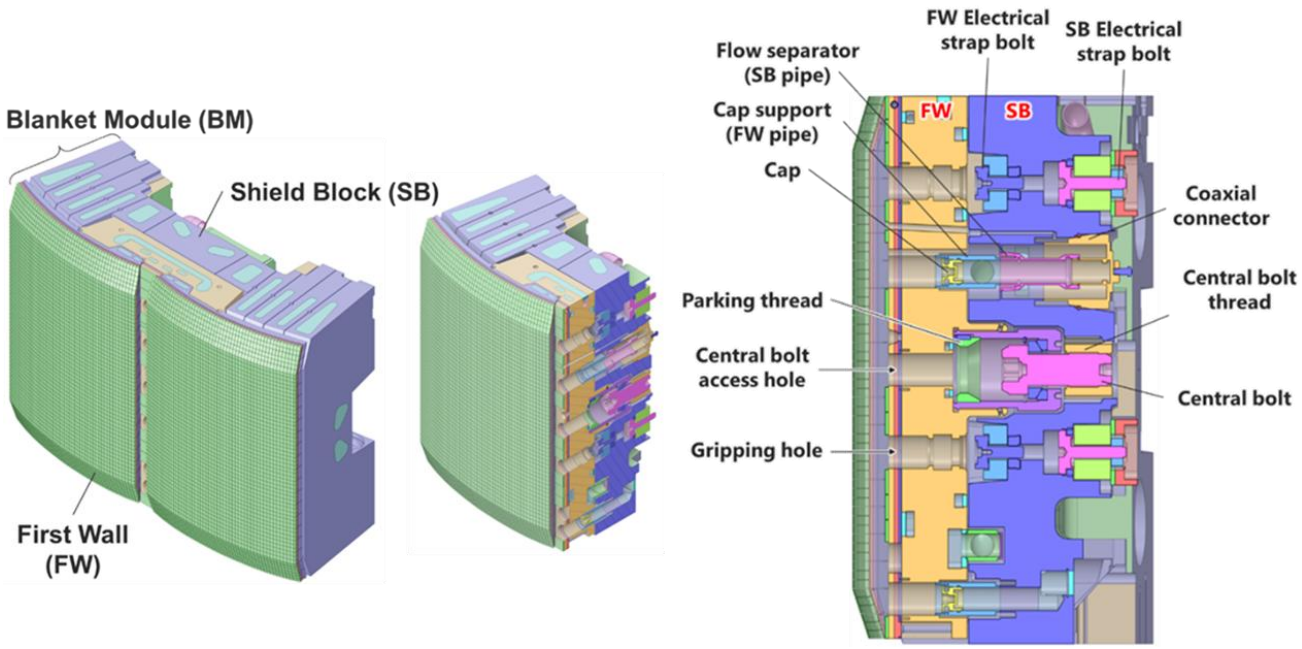

図 3　BM#4 構造断面図

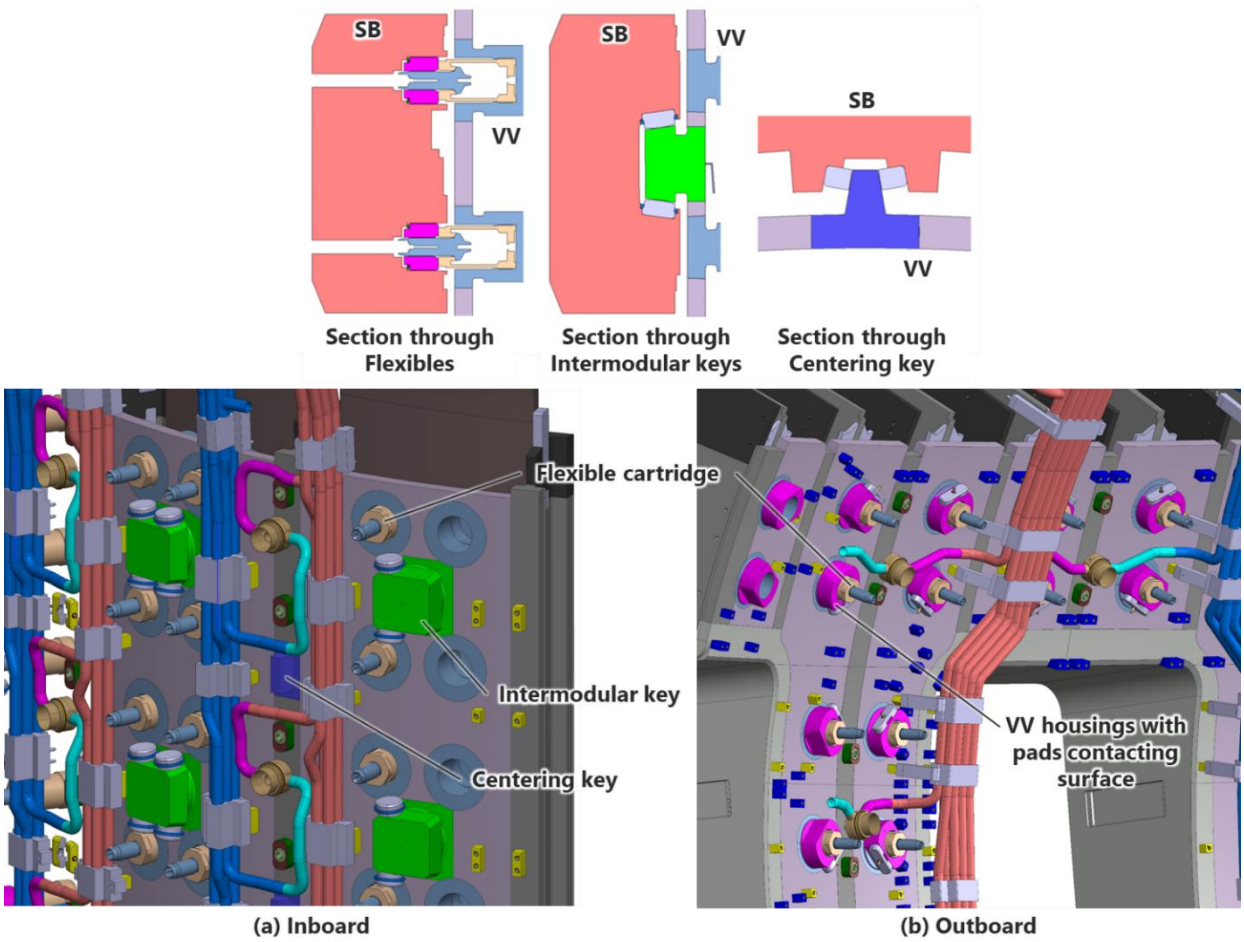

図 4　SB と VV の接続部構造

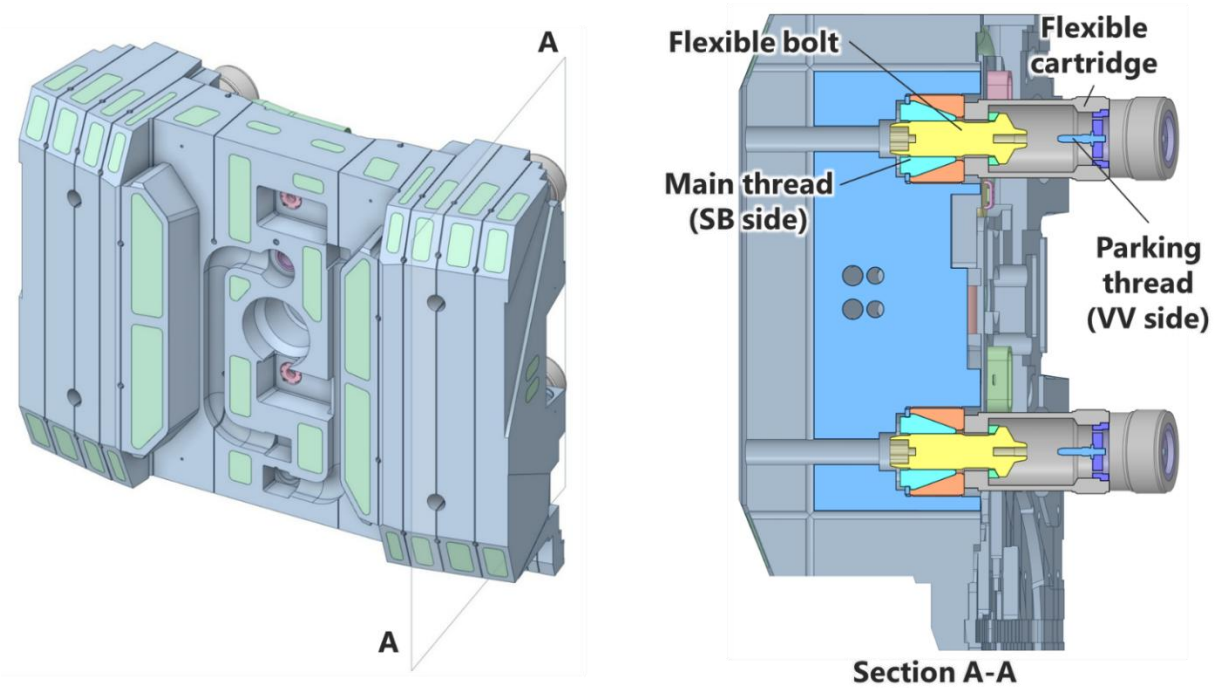

図 5　SB#4 の FB 部断面図

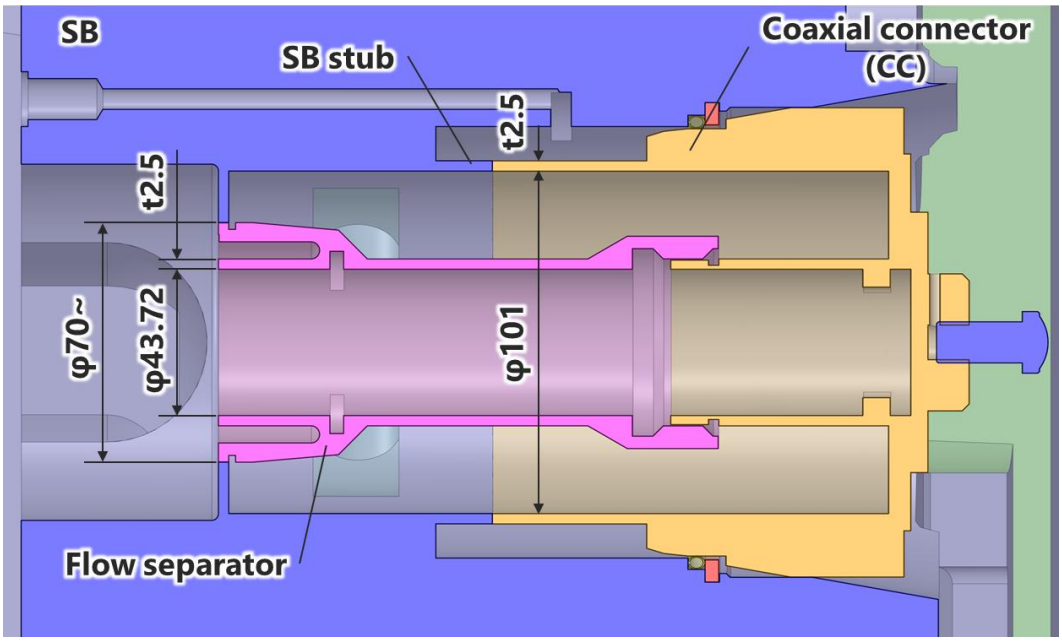

図 6　SB-VV 間の冷却水流路断面図（CC）

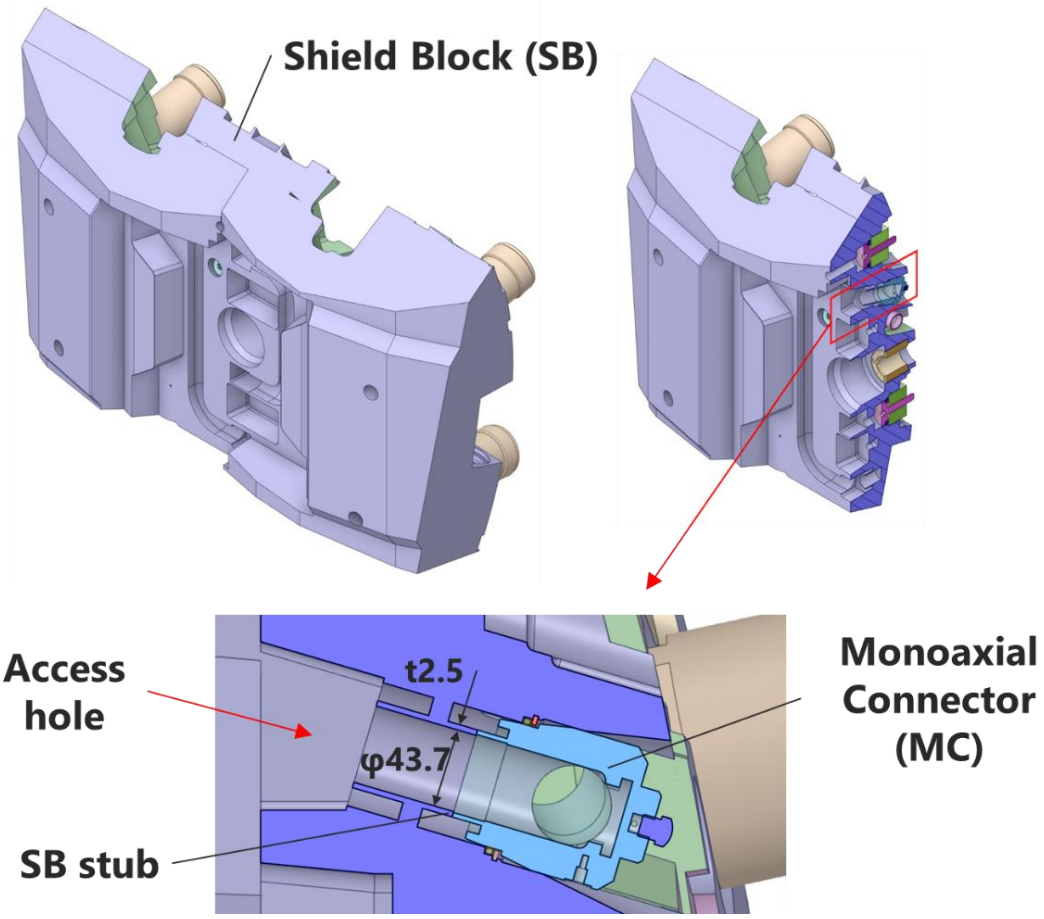

図 7　SB#8 構造断面図（MC）

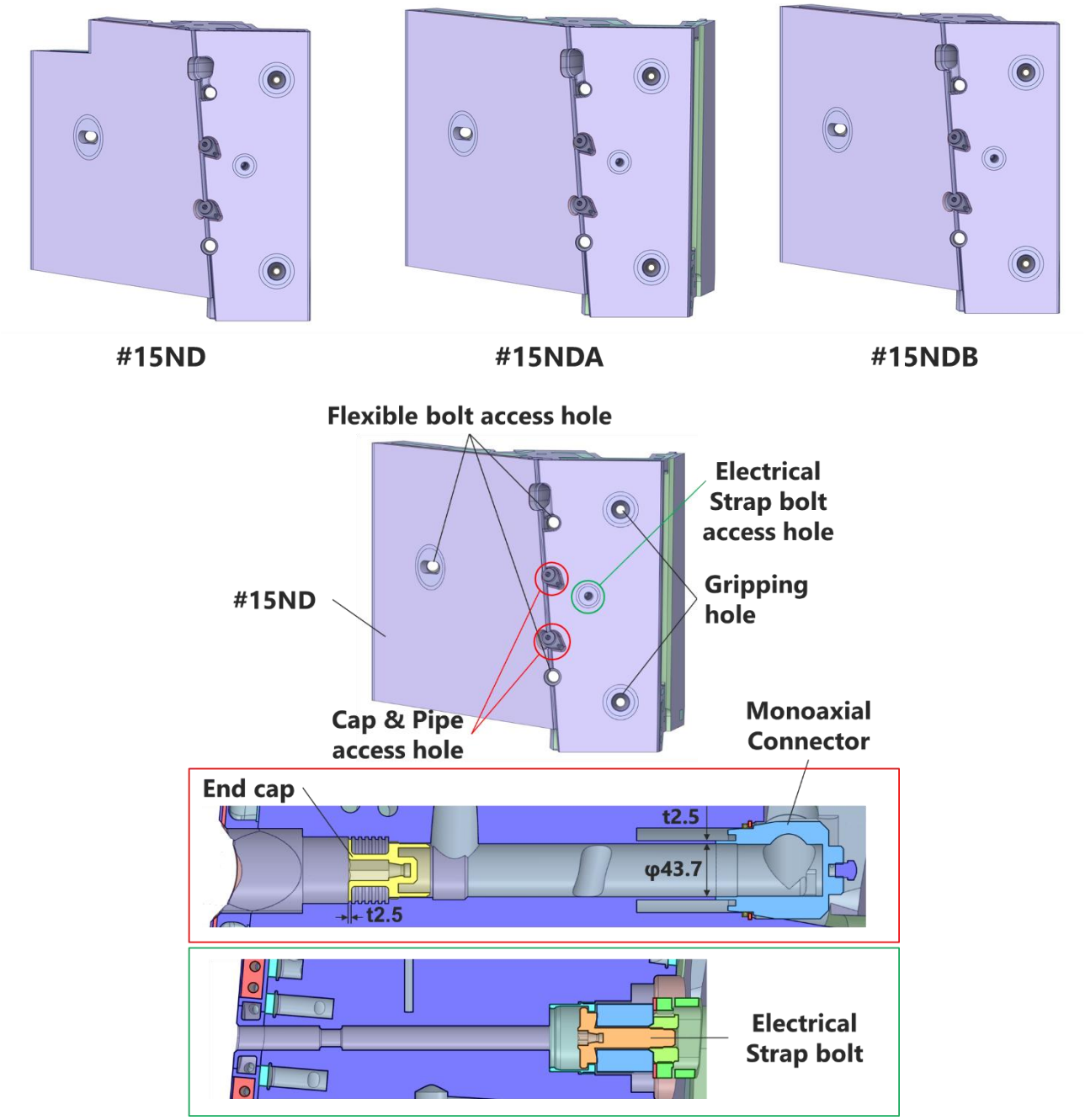

図 8　#15ND 系モジュール構造断面図

2.3.2　初期組立作業時に使用されるツール

BM 保守ツールは、下記に示すように主に重量ツールと軽量ツールに大別される。BM の初期組立時は非放射線環境下の VV 内で、作業員が近づいて作業を行うことができる。このため、初期組立用ツールは耐放射線性及び遠隔操作性を考慮する必要はない。

(1)　重量ツール：BAT と呼ばれる運搬機を用いて把持する（2.4.4.1 項参照）。

(2)　軽量ツール：ゼロ G アーム（ZERO G Arm）という重量を軽減する補助装置を用いて把持し、IVTC に接続されたナセル（Nacelle）と呼ばれる作業用ゴンドラ上で作業員が作業を行う（2.4.4.4 項参照）。

＊上記の BAT や ZERO G Arm の設計は本契約範囲外である。

2.3.3　SB保守内容

本項では、本件で設計・製作する検証用制御装置及び検証用架台と関係する SB 保守ツールによる SB 保守作業手順を詳述する。なお、各種 SB 保守ツールの設計製作は、本契約の対象外とする。

2.3.3.1　CCWT による溶接作業工程

本項では、CCWT による CC の溶接作業の工程手順を以下に詳述する。

(1)　本作業は FW 全体及び FS が SB に未設置（又は SB から取り外された）状態、且つ SB が VV 内に設置された状態で実施される。この時点では、溶接部である CC と SB stub 間には開先誤差が生じている(CCWT の前工程)。

(2)　SBTB を作業対象 SB 上の CB スレッドに対し中央クランプ機構（central clamping mechanism）により固定する。(図 9 において CCWT がない状態・図 10 左図参照)

(3)　CCWT の回転軸部（Rotating part）を SBTB に接続した TFU に貫通させる形で SB の CC 導入孔へ挿入し、TFU に固定する（図 9 全体)。

(4)　TFU 及び CCWT に具備する軸方向調整機構（Z linear guide）により、溶接対象位置に対して CCWT の位置仮合わせを行う。

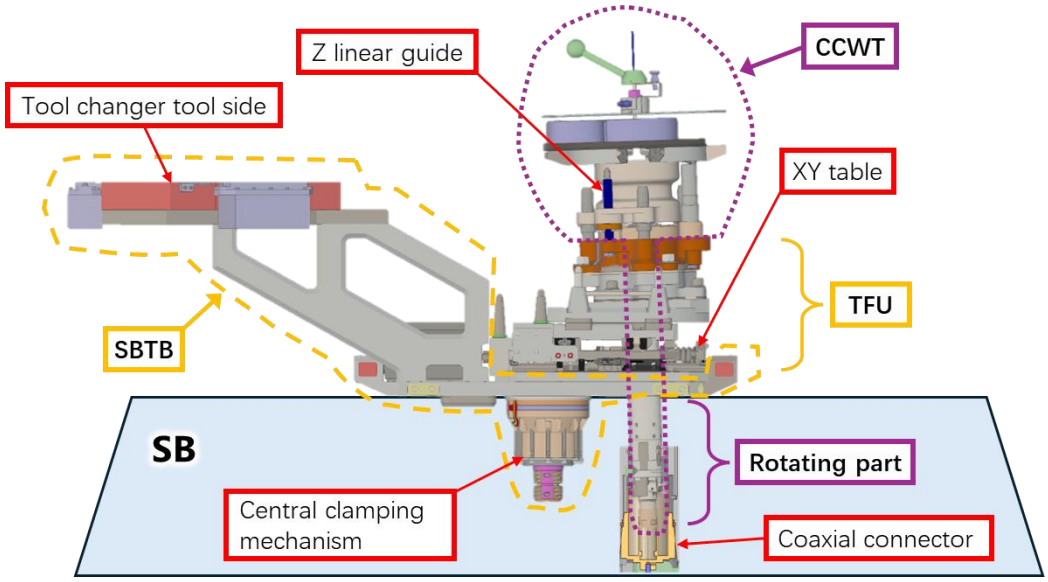

図 9　CCWT 作業工程 #1：SB に固定及び位置仮合わせ

(5)　CCWT の変位センサー（Displacement sensor）が SB stub 付近に配置されるように CCWT の高さを調整し設定する。(図 10 右図参照)

(6)　変位センサーで SB stub の中心軸に対する CCWT の偏心を測定する。

(7)　許容値以下の軸ずれとなるまで TFU の XY テーブルを調整する。
(8)　CCWT の変位センサーを軸方向調整機構にて溶接箇所に合わせる。
(9)　CCWT 先端の引込みロッド（Pulling Rod, PR）フックを CC のロッキングノッチに嵌合させる（図 10 右図参照）。

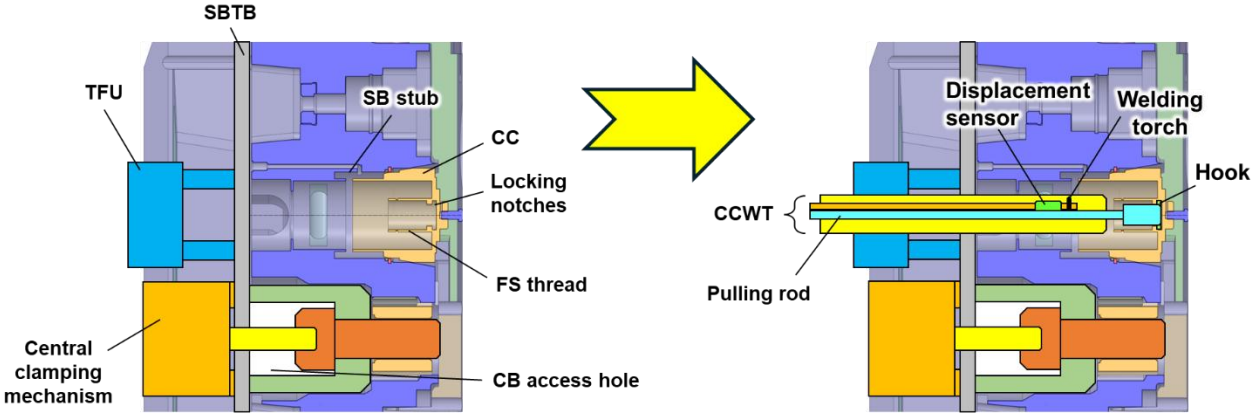

図 10　CCWT 作業工程 #2：嵌合部の位置測定及び調整

(10) PR で CC を 20 kN の牽引力で引込む。（図 11 左図参照）
(11) CC 接合部のずれを測定し、ずれが許容範囲を超える場合は、より高い牽引力（最大 30kN）で引込む。
(12) 引込みを維持したまま、溶接トーチが CC 接合部に来るよう CCWT を位置調整し、溶接トーチを CC 接合部に近付ける。
(13) 溶接を実施する。(図 11 右図参照) ※内蔵のアーク電圧制御 (AVC) 装置を使用する。
(14) 溶接完了後、PR の引込み力を開放する。
(15) CCWT の軸方向調整機構にて変位センサーを溶接箇所に合わせ、溶接ビードをスキャンし状態を確認する。

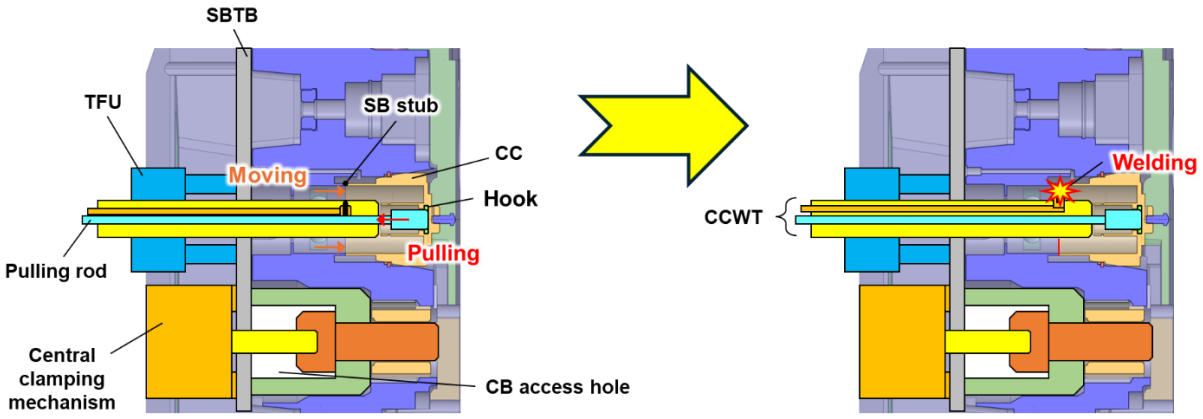

図 11　CCWT 作業工程 #3：引込み及び溶接

2.4　設計仕様

本項では、各種検証用制御装置及び検証用架台に関する設計検討を実施するにあたり考慮すべき点を示す。

2.4.1　CCWTの設計仕様

CCWT の設計情報を以下に示す。なお CCWT そのものについては本仕様での設計製作対象外とする。

(1)　CCWT の目的：

(a)　SBTB のツール固定部（TFU）に固定する機能を有する。

(b)　CC と SB stub の開先誤差を計測する機能を有する。

(c)　CC を SB 側に引き込む機能を有する（図 12 参照）。

・ SB を VV に設置した際に生じる CC と SB stub 間の開先誤差（軸ずれ及び並進ずれ）を CCWT の PR で引込み、誤差を補正する。

(d)　CC と SB stub を溶接する機能を有する。

・ 上記の引込み力をかけたまま、CCWT により CC と SB stub の溶接を行う。

・ 溶接は TIG 溶接法により実施する。

(2)　CCWT の機器構成：図 13 及び図 14 参照

(a)　SBTB への固定取合い（Tool base interfaces（図 13 内に示す名称と対応。以下同様とする。））

・ SBTB の TFU に CCWT を固定するための取合いを有する。

(b)　ZERO G Arm への固定取合い

・ ZERO G Arm に CCWT を固定するための取合いを有する。

(c)　CC 引込み機構（CC Pulling mechanism）：

・ 引込みロッド（PR）を有する。

－ 先端に CC 内の奥側にあるロッキングノッチと取合うフック構造を有する。

－ PR は溶接実施時の CCWT の回転に追従しないこと。

・ 最大 30kN の力を印加可能なこと。印加方法は手動式とする。

－ PR 端部にネジ山が切られており、CCWT 端部のハンドル(Handle for CC pulling)を回すことで、CC を最大 30kN の力で引き込むことが可能なこと。

－ 溶接作業中にも引込み力を印加し続け、CC と SB stub 間の誤差が拡がることを防止する。

・ 引込み力の計測機能を有する。

－ ハンドルの下に負荷変換器を配置し、引込み力を計測できること。

(d)　カメラ（Camera）：

・ 溶接後にビードの外観観察を行う。

(e)　変位センサー（Displacement sensor）：

・ CCWT と CC/SB stub 間の距離を計測する。この計測値を基に、SBTB の TFU の位

置を調整して CCWT と CC/SB stub を同軸に合わせることが可能なこと。

- CC と SB stub 間の開先誤差（軸ずれ及び並進ずれ）を計測するため、CC 引込み機構とは別に、軸方向に移動させる機構を具備すること。本機構はモータ駆動とする。
- 後述のツール回転機構との組み合わせにより、360 deg 全周における計測を実施すること。

(f) 溶接トーチ（Welding torch）：

- TIG 溶接法により、CC と SB stub の開先部を内側から溶接する。
- SB の導入孔を通り、CC と SB stub の開先部に接触させるため、電極の位置を調整させる機構を有する。
- シールドガスの流路及び吹き付け孔を具備する。
- 溶接位置の調整のため、CC 引込み機構とは別に、電極を軸方向に位置を調整させる機構も具備（非図示）する。

(g) AVC 機構：

- 溶接電流/電圧値に合わせて、溶接トーチ先端の TIG 電極と CC と SB stub の開先部（溶接箇所）までの距離を調節する機構を有する。
- AVC 機構の駆動はモータ式とする。

(h) ツール回転機構（Tool rotation mechanism）：

- CCWT 全体を軸回りに回転させる機構。溶接トーチ及び AVC 機構と連動し、CC と SB stub の開先部を全周溶接する。
- 駆動はモータ式とする。

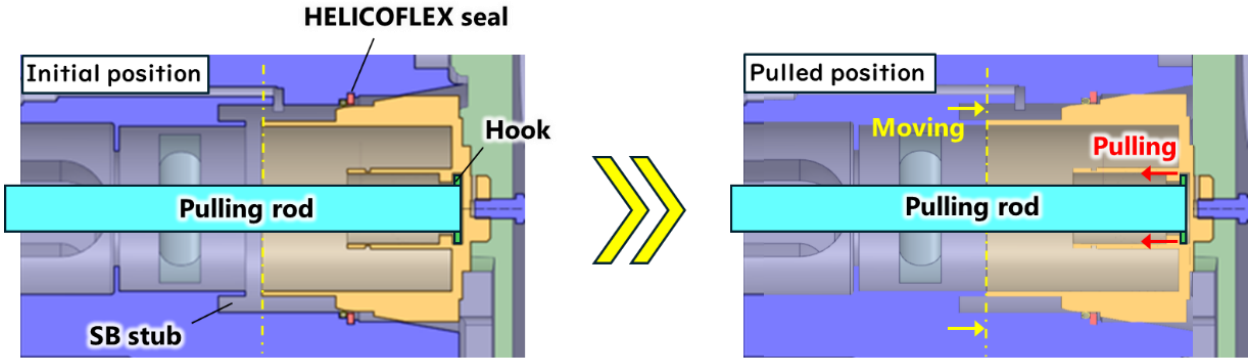

図 12　CC 引き込みの概念図

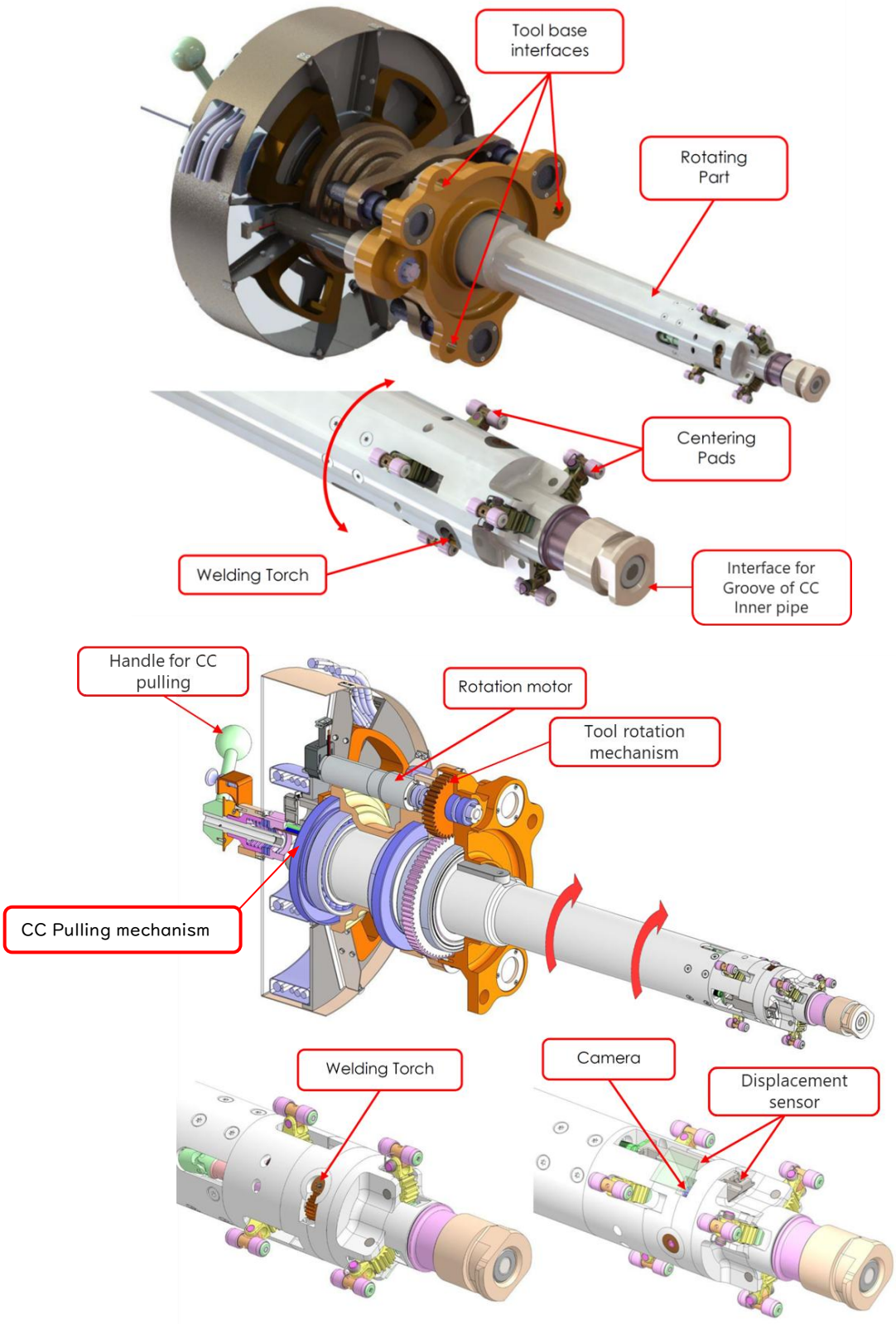

図 13　CCWT 概念設計

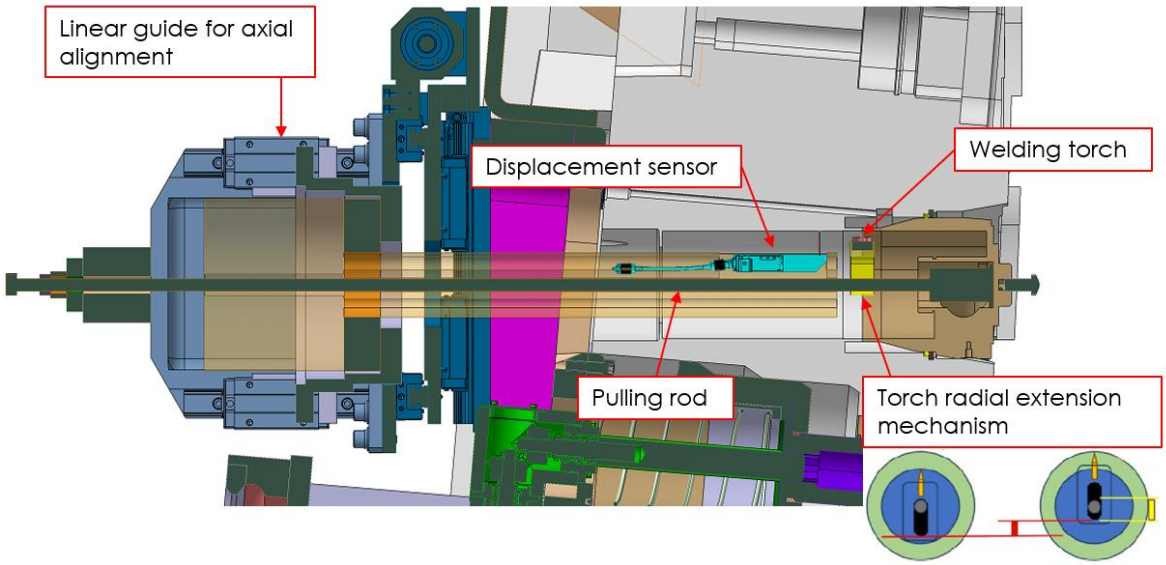

図 14　CCWT 及び SBTB の接続時構成概要

2.4.2　制御装置

制御装置の構成は、大きく上位制御系（High-Level Control System, 以下「HLCS」という。）と下位制御系（Low-Level Control System, 以下「LLCS」という。）に分類される。HLCS は、主に運転員との取合いの役割を担い、操作監視に関わるヒューマンマシンインターフェイス（Human Machine Interface, 以下「HMI」という。）及びそれに付随するアプリケーションを有する。LLCS は制御対象機器との直接の取合いを有する制御装置であり、各種ドライバやコントローラ等が実装される。

各種ツールの制御系は、その運用タイミングによって、2 つの制御系統の接続を有する。図 15 にその概略図を示す。各種ツールに関わる運用フェーズとして、EE が BAT に接続された状態で所望の位置まで移動する Transporter mode と、EE が BM に固定された後にツール等により各種作業を行う Skid mode が挙げられる。

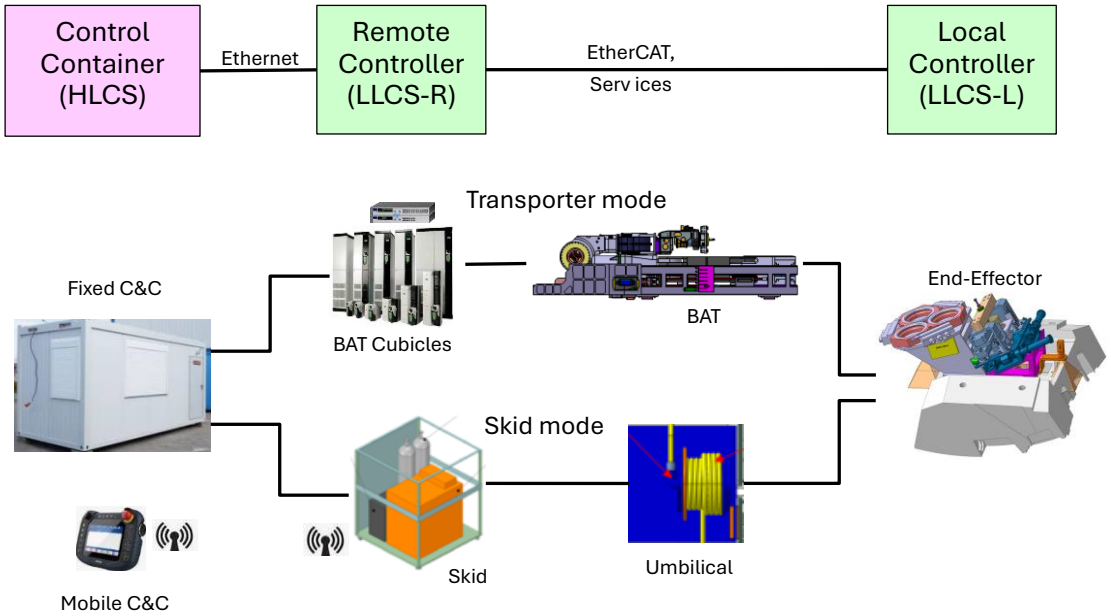

図 15 EE に接続される制御システム構成概要

Transporter mode の場合、BAT 内を経由するケーブル配線に厳しい制約がある。EE には最小限のケーブルが接続されるという前提で、Transporter mode における EE の設計と運用を検討する必要がある。Transporter mode 時、EE の主な取り合いは以下となる。

- EE のローカルコントローラ用の電源
- 通信（EtherCAT）
- カメラネットワークリンク

Skid mode においては、EE が BM に固定された状態で EE とツールの運用を行う。Skid 及びケーブルは、ツールの運用（例：溶接作業）に必要なユーティリティを提供する。

- EE のローカルコントローラ用の電源
- 通信（EtherCAT）

・　圧縮空気
・　溶接ガス
・　溶接電力

Skid mode では、コントロールコンテナ（運転室）から有線、又はモバイルコントローラにより無線での制御を可能にする。

モバイルコントローラには、コントロールコンテナからの有線制御とモバイルコントローラからの無線制御の切り替えを行うキースイッチを実装する。これにより、双方の制御指令の競合を回避することができる。

注意:EE には､BAT による EE の正確な位置決めのために必要なカメラが実装されている。これらのカメラは、BAT ビジョンシステムに直接取合いされる必要がある。（ツール用制御システムへの接続は不要）

High-Level Control System (HLCS)

ツールに関わる制御系は、以下の HLCS HMI を実装する。

・　Command and Control (C&C)：EE/ツールを操作するための HMI。
　➢　コントロールコンテナ内の固定 PC の HMI（有線 Ethernet 接続）
　➢　ナセル上で使用するモバイルコントローラ HMI（無線 Ethernet 接続）

ツール制御システムは、仮想現実 HMI（本契約の範囲外）と取合う。また、ツール制御システムの運用手順は、Operation Management System（本契約の範囲外）によって管理される機器全体の制御系に統合される。

Low-Level Control System (LLCS)

ツール制御系には、2 つの運用モードのためのリモートコントローラがある。

・　制御盤筐体に実装するリモートコントローラ：BAT に取り付けられた EE の遠隔制御のための制御モジュール（Transporter mode）
・　Skid に実装するリモートコントローラ：EE とツールの遠隔制御のための制御モジュール（Skid mode）

また、以下の EE は各オンボードローカルコントローラを持つ。

・　SBG：Transporter mode のみ
・　FBT：Transporter mode 及び Skid mode
・　SBTB：Transporter mode 及び Skid mode
・　15NDG：Transporter mode のみ
・　15NDTB：Transporter mode 及び Skid mode
・　FWG：Transporter mode のみ
・　FWCBT：Transporter mode のみ

ツール制御システムの主構成要素を図 16 に示す。（グレーアウト箇所は対象外）

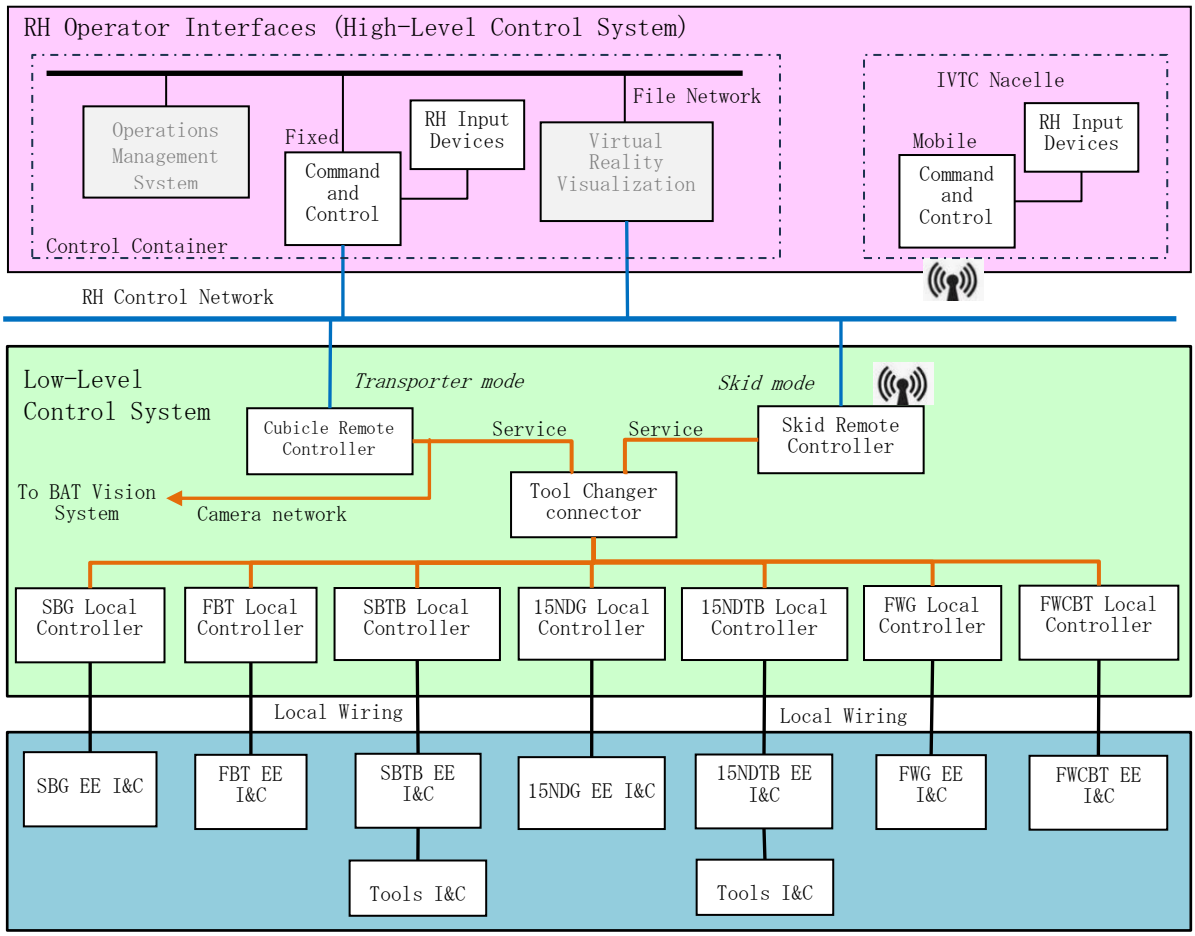

図 16 ツール制御システムの概略構成

Transporter mode

Transporter mode の場合、EE はツールチェンジャーを介して BAT の先端に取り付けられる。BAT を介して EE への電気的な接続が成立し、EE のカメラは BAT ビジョンシステムに接続される。

Transporter mode における操作では、BAT と EE の順次操作が必要である。例えば以下のフロー等が想定される。

- BAT が BM に対してスタンドオフ位置に移動する。
- ビジョンシステムのフィードバックにより、BAT が EE を BM に合わせて配置し、接続する。
- EE が BM を把持する。
- EE が VV に対する BM の固定を解除する。
- BAT が BM の荷重を BAT に移すために移動する。
- BAT が BM を VV 壁から移動させる。

操作シーケンスは、正確に検証された順序で実行されなければならない。これは、BAT とツールの制御シーケンスを共通の再生ファイルに実装することによって確立される。

Skid mode

Skid mode では、EE が BM に固定された状態となる。この時ツールは、コントロールコンテナから遠隔で操作するか、IVTC ナセル内の作業員によってローカルに操作することが可能である。これを可能にするために、リモートコントローラは無線通信をサポートする必要がある。この構成により、C&C HMI を、VV 内の IVTC ナセル内で運用されるモバイルコントローラ上で実行することができる。

C&C HMI

C&C GUI アプリケーションは、ツールシステムを操作するために必要となる。C&C は、Red Hat Enterprise Linux（CODAC で使用される最新バージョン）上で動作可能となるように実装する。C&C は、コントロールコンテナ内の PC または VV 内で運用されるモバイルコントローラ上で実行可能となるように設計する。C&C は、運転員に対して、ツールシステムを操作するために以下の機能を提供する。

- ステータスデータの表示
- 操作コマンドを構築して送信するための取合い
- 事前に記録された操作シーケンスの実行

C&C（PC 実装及びモバイルコントローラ実装）は、IO が提供するプロトコル（Low-Level CIP API）により、下位制御系と通信を行う。コントローラの各種通信データ（ステータスデータ、コマンド、アラーム、イベント）は、IO に提供する。

Transporter mode では、BAT と EE を制御するために、両者の機能が統合された単一の C&C GUI（図 17 参照）が必要となる。BAT C&C と EE 用 C&C の統合は IO により実施する。C&C HMI は、Structured Language フォーマットにより、BAT と EE の順次操作を含む事前プログラムされたシーケンスを実行する機能を有する。ツール操作の FAT で使用された C&C のソースコードは、ITER 運用チームに提供される。

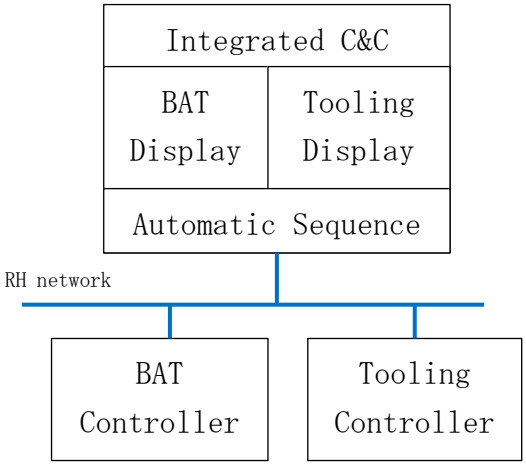

図 17　BAT 及び EE の C&C 統合の概略図

Skid mode では、BM に固定されたツールシステムを操作するために、C&C は堅牢なポータブルコントローラ上で操作指令を実行する必要がある。ポータブルコントローラは、リモートコントローラとの無線通信機能を有する。また、システムを安全な状態にトリップさせるための非常停止ボタンを実装する（図 18 参照）。

C&C はポータブルコントローラ上で実行され、EE 及びツールを操作するために必要な機能を提供する。C&C HMI は、人間工学を考慮して設計する必要があり、C&C レイアウトの設計は、開発ライフサイクルの適切な時期に ITER 運用チームとのレビューを行う。VV 内では作業員が手袋を着用してポータブルコントローラ操作することを考慮に入れて、C&C の設計を行う。

図 18　ポータブルコントローラ参考図

キュービクルリモートコントローラ

ツール制御システムには、BAT（Transporter mode）に取り付けられた EE を制御するためのキュービクルリモートコントローラが含まれる。キュービクルリモートコントローラの機能は以下の通りである。

- C&C HMI との取合いを提供すること。
  - 定期的にステータスデータを HMI に送信すること。
  - HMI コマンドを処理すること。
- ツール用ステートマシンを実行すること。
  - ツールの全体的な機能（動作及びツールプロセス）を管理すること。
- EE に実装されるアクチュエータドライバとの取合いを提供すること。
  - EtherCAT を介して動作コマンドを送信し、センサーデータを監視すること。
- 非常停止回路を実装すること。
  - トリップ及びリセットが可能であること。
  - 外部保護システムによるトリップ用の I/O を提供すること。

キュービクルリモートコントローラは、標準の CODAC キュービクルに設置できるように構築されるものとする。キュービクルリモートコントローラは BAT キュービクルに取り付けられ、BAT キュービクルから AC 電源および RH ネットワークへの接続を受けることを想定している。

スキッドリモートコントローラ

ツールシステムには、Skid mode 時、BM に取り付けられた EE 及びツールを制御するためのスキッドリモートコントローラが含まれる。スキッドリモートコントローラの機能は以下の通りである。

- C&C HMI との取合いを提供すること。
  - 定期的にステータスデータを HMI に送信すること。
  - HMI コマンドを処理すること。
- ツール用ステートマシンを実行すること。
  - ツールの全体的な機能（動作およびツールプロセス）を管理すること。
- EE に実装されるアクチュエータドライバとの取合いを提供すること。
  - 動作コマンドを送信し、センサーデータを監視すること。
- 非常停止回路を実装すること。
  - トリップおよびリセットが可能であること。
  - 外部保護システムによるトリッピング用の I/O を提供すること。
- ツールのプロセスコントローラ(例:溶接コントローラ)との取合いを提供すること。

スキッドリモートコントローラは、C&C との有線イーサネット通信および無線イーサネット通信の両方をサポートするものとする。スキッドリモートコントローラは、キュービクルリモートコントローラと同じハードウェアを利用するものとする。スキッドリモートコントローラは、Skid に設置されるものとする。

Skid には、ツール特有のコントローラが実装されるものとする。これらは COTS 製品であることを想定する。溶接ツールなどの場合、電力及び信号はツールチェンジャーおよび EE 上のローカルコントローラを経由せずに直接ツールに接続されることがある。

ローカルコントローラ

ローカルコントローラは、各 EE に対応した構成とする。ローカルコントローラは、特定の EE 及びツール(該当する場合)の動作を制御するものとする。ローカルコントローラは、VoIP カメラとの取合いをサポートするものとする。イーサネットアップリンクは、BAT ビジョンシステムに接続されるものとする。EE アクチュエータドライバとの通信は EtherCAT を使用するものとする。ローカルコントローラのコンポーネントは、各 EE の特性に依存するものとする。

2.4.3　プロトタイプBM保守ツール設計全般の要求事項

本項では、各種 BM 保守ツールのプロトタイプに適用される要求事項を以下に記載する。

2.4.3.1　軽量ツール及び重量ツールに適用される要求事項

軽量ツール（適用図書[4]における「All tools」）及び重量ツール（適用図書[4]における「All EEs」）に共通して適用される要求事項は適用図書[4]の No.1～14 を参照すること。ただし、ある要求において指定される機能を有しないツールに対しては、その要求は適用しない（例：No.14 は溶接に関する要求のため、溶接ツール以外には適用外）。

2.4.3.2　重量ツールに適用される要求事項

重量ツールに適用される要求事項は適用図書[4]の No.15～45 を参照すること。ただし、ある要求において指定される機能を有しない重量ツールに対しては、その要求は適用しない。

2.4.3.3　軽量ツールに適用される要求事項

軽量ツールに適用される要求事項は適用図書[4]の No.46～69 を参照すること。ただし、ある要求において指定される機能を有しない軽量ツールに対しては、その要求は適用しない。

2.4.4　SB保守ツール運用に係る機器との取合い

本項では、BM の初期組立時に用いられる関連機器として BAT（Blanket Assembly Transporter：ブランケット組立運搬機）、BMTS（Blanket Module Transfer System、ブランケット運搬システム）、BMTS 収納板（Storage plate）、IVTC（VV 内塔形クレーン）、ナセル（Nacelle）及び ZERO G Arm の概要について記載する。なお、これらは本契約の対象外のため、以下は参考情報である。

2.4.4.1　BAT

ブランケット初期組立において、重量ツール（SBG、SBTB、15NDG、15NDTB、TSR 等）の装着先となる運搬機は、図 19 に示す BAT である。BAT の先端にはツールチェンジャーが具備されており、重量ツール（EE 機器）の装着が可能な構造となっている。

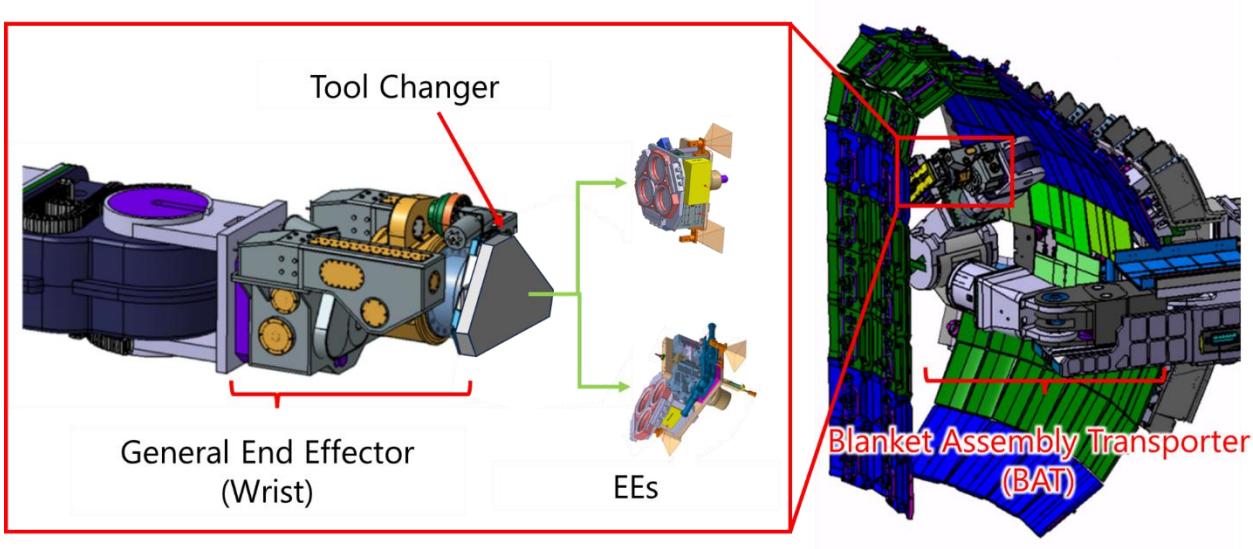

図 19 BAT の概略図

2.4.4.2　BMTS

BMTS は、BM 初期組立時に必要となる機器を TPTS（直通ポート運搬システム：図 20）経由で VV 内外に搬入出するための運搬システムで、運搬対象の機器は BMTS 上の収納板に固定・搭載される状態となる。機器のうち、重量ツールは VV に搬入後、VV 内で BAT によって把持される設計仕様になっている。

このため、重量ツールは BAT に接続できるように、ツールチェンジャーを具備するものとする。BAT が重量ツールをツールチェンジャー経由で把持する際は、作業者が傍にてツールの状態を確認しながら作業を実行すること。

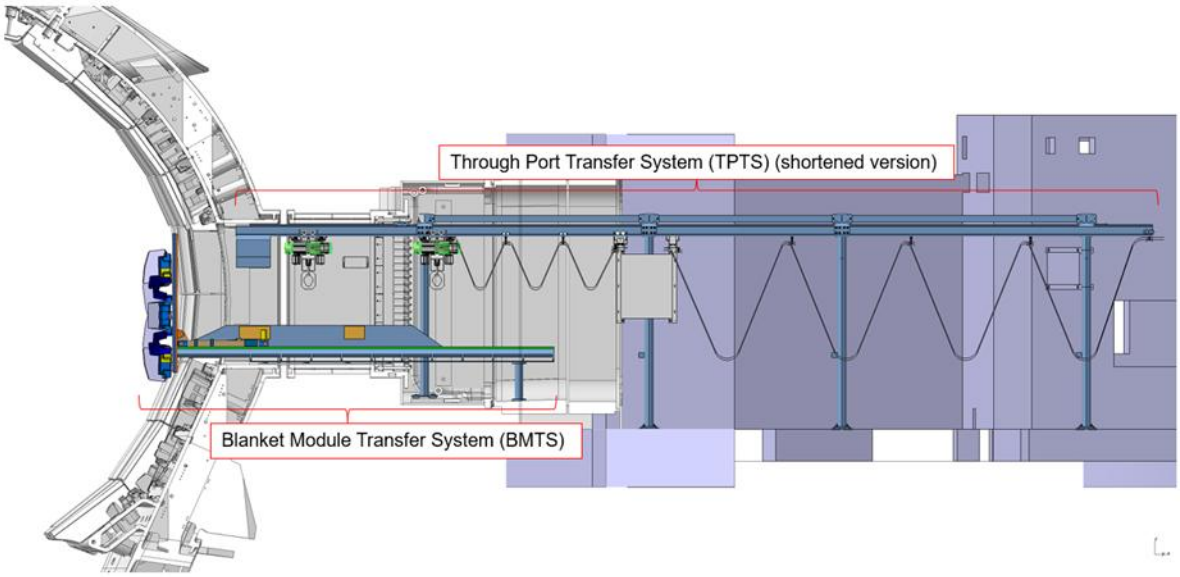

図 20　TPTS における BMTS の位置関係の図（側面視）

2.4.4.3　BMTS 収納板の設計制約

BMTS の機器収納部分は、従来の箱型から板構造（長さ：2100mm×幅：1310mm×厚さ：30mm）へと設計変更されたが、搭載面の寸法に変更はない。各種ツールはこの収納板上にクランピングモジュール（固定治具）で搭載され、ポートから VV 内へ搬入される。収納板上に搭載されるツール類は、所定の外形寸法（長：2100mm×幅：1310mm×高：665mm）以内に収めるものとする。

BMTS 収納板の形状とツールの搭載例を図 21 に示す。

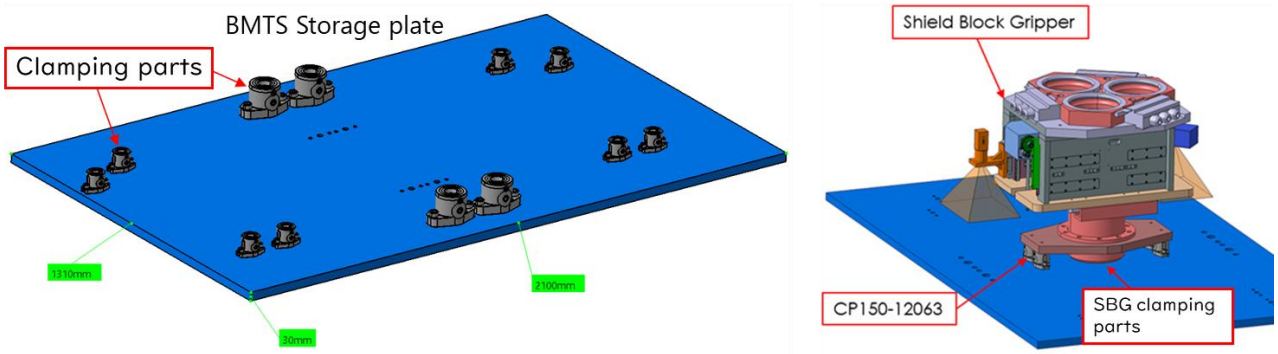

図 21　BMTS 収納板

2.4.4.4　IVTC 及びナセル

IVTC は昇降式のクレーン土台と伸縮型のアーム部からなり（図 22 左)、IVTC のアーム先端部に作業用ゴンドラであるナセルを接続する構造となっている（図 22 右)。ナセル上で、作業員による VV 内でのツール搬送や設置等の保守作業を行うものとする。

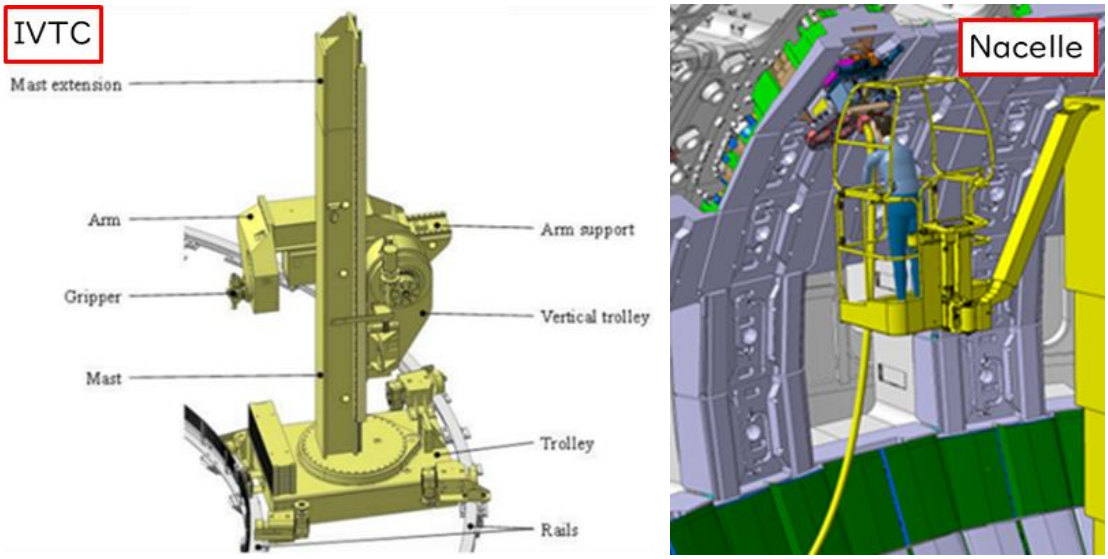

図 22　IVTC 及びナセル

2.4.4.5　ZERO G Arm

BAT で把持しない 40kg 以下の軽量ツールは、ZERO G Arm によりハンドリングされるものとする。ZERO G Arm は、重量物や工具の取り扱いを容易にするための装置であり、バランス機構やスプリングなどを用いて把持対象の重量を軽減し、作業員が負荷を感じることなく操作できるよう設計される（図 23 参照）。

ZERO G Arm との取合いは GRIP GmbH Handhabungstechnik 社の小型ツールチェンジャー：SHW125（図 24）とする。

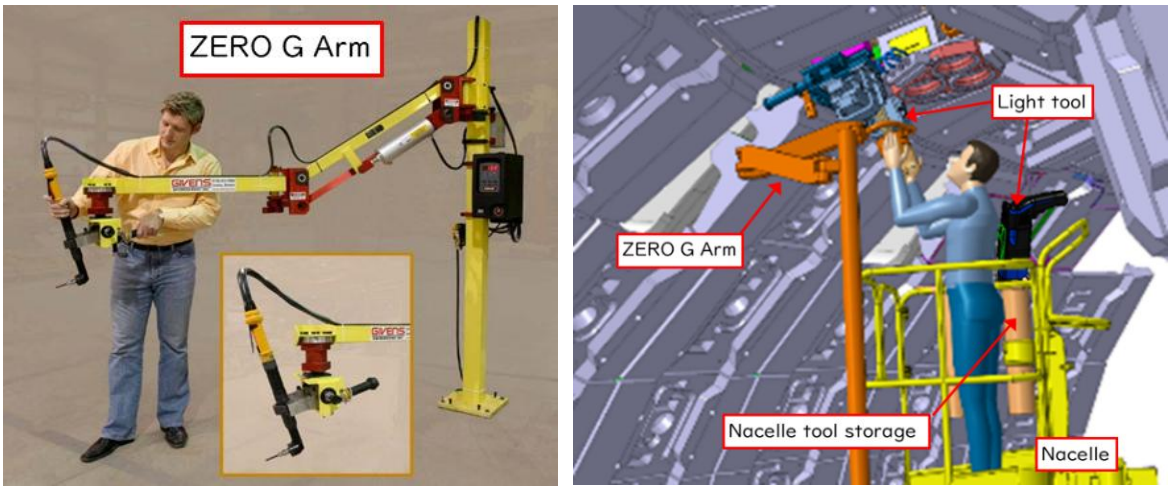

図 23　ZERO G Arm のナセル上における使用例

図 24　小型ツールチェンジャー：SHW125

2.5　検証用制御装置及び検証用架台の設計

受注者は 2.1～2.4 項に示した設計仕様及び設計情報を考慮し、2.5.1 項及び 2.5.2 項に示す作業を行い、各種検証用制御装置及び検証用架台を設計すること。

2.5.1　ツール検証用制御装置における制御システム及びソフトウェアの設計

受注者は、2.3.3.1 項、2.4.1 項及び 2.4.2 項に示した設計仕様及び設計情報を考慮し、CCWT プロトタイプを動作させるための制御装置及びソフトウェアの設計を実施すること。

(1)　制御対象：

(a)　CC 引込み機構部（引込み力監視のみ）

(b)　カメラ

(c)　変位センサー（モータ制御及び計測値監視）

(d)　溶接トーチ（溶接電流及び電圧）　＊AVC 機構及びツール回転機構と同期制御すること。

(e)　AVC 機構（電極と溶接対象部間の距離）

(f)　ツール軸方向及び回転機構（速度及び位置/角度）

(2)　装置構成

(a)　ローカルコントローラ

(b)　Skid mode で使用するリモートコントローラ

(c)　Skid mode 用のポータブルコントローラ（C&C を実装）

(d)　その他必要なケーブルや制御機器

(3)　要求機能：

(a)　事前に作成したミスアライメント及び溶接のプログラムを実施できること。

(b)　CC 引込み機構による CC 引込み力を監視し、データを記録できること。

(c)　軸合わせ機構を動作できること。

(d)　カメラによる映像を監視し、データを記録できること。ただし、実機ではカメラに関わる制御装置は、他の機器制御に関わる制御装置とは別扱いのものとなるため、必要に応じて他機器の制御装置とは別のハードウェアとすること。

(e)　変位センサー上下、回転機構（回転速度、位置）を制御すると共に、距離の計測値を監視し、データを記録できること。

(f)　溶接トーチ及び AVC 機構、ツール回転機構を制御（回転速度、位置、溶接電流・電圧、ガス流量等）を任意に設定して動作可能なこと。

(g)　上記の動作ログデータを記録できること。

(h)　上述の全データを USB メモリなどの記録媒体に保存できること。

(4)　備考：

(a)　材質はアルミ合金、ステンレス鋼又は防錆処理した炭素鋼とし、極力軽量化すること。

(b)　各種設計・製作にあたっては、以下の指令に適合すること。

・Electromagnetic Compatibility (EMC) Directive 2014/30/EU

・Low voltage Directive (LVD) 2014/35/EU
・Machinery Regulation 2023/1230/EU
・RoHS Directive 2011/65/EU

(c) その他、受注者側検討により提案がある場合は、適宜協議の上決定とする。

2.5.2　ツール検証用架台の設計

受注者は、2.3.3.1 項、2.4.1 項に示した設計仕様及び設計情報を考慮し、CCWT の動作検証を実施するための固定架台を設計すること。架台の構造、外径については Test Tool Bench Outline Drawing にまとめ、QST の確認を得ること。

2.6　検証用制御装置及び検証用架台の製作

受注者は 2.5 項で設計した検証用制御装置及び検証用架台を製作すること。

- ツール検証用架台：1 台
- ツール検証用制御装置：1 式

2.7　検証用制御装置及び検証用架台の機能確認試験

2.6 項で製作したツール検証用制御装置及び検証用架台に対する機能確認を実施すること。

本確認の範囲として、検証用制御装置単体及び検証用架台単体の寸法や配線状態、基本機能の確認を実施するものとする。具体的な実施内容案として、図面に基づく主要寸法の確認、電源配線、信号配線等の配線接続状態の確認や、検証用制御装置単体として確認できる範囲の動作確認等が挙げられる。動作確認実施前に作業内容について、QST の確認を得ること。なお、実機ツールを用いた実負荷条件下での総合動作試験又は性能評価は対象外とする。

2.8　図書類の作成

受注者は、2.5～2.6 項にて実施した設計・製作作業及び 2.7 項の試験結果について、1.5 項及び 1.6 項に基づく納入物及び図書一式を製作・作成し納入すること。

以上

イーター調達取決めに係る品質保証に関する特約条項

本契約については、契約一般条項によるほか、次の特約条項（以下「本特約条項」という。）による。

（定義）

第１条　本契約において「協定」とは、「イーター事業の共同による実施のためのイーター国際核融合エネルギー機構の設立に関する協定」をいう。

２　本契約において「イーター機構」とは、協定により設立された「イーター国際核融合エネルギー機構」をいう。

３　本契約において「加盟者」とは、協定の締約者をいう。

４　本契約において「国内機関」とは、各加盟者がイーター機構への貢献を行うに当たって、その実施機関として指定する法人をいう。

５　本契約において「フランス規制当局」とは、イーター建設地であるフランスの法令に基づき契約物品に関して規制、許認可を行う権限を有する団体をいう。

（品質保証活動）

第２条　乙は、本契約書及びこの契約書に附属する仕様書（以下「契約書等」という。）の要求事項に合致させるため本契約内容の品質を管理するものとする。

（品質保証プログラム）

第３条　乙は、本契約の履行に当たっては、乙の品質保証プログラムを適用する。このプログラムは、国の登録を受けた機関により認証されたもの（ISO9001-2015 等）で、かつ、本特約条項に従って契約を履行することができるものとする。ただし、これによることができないときは、甲により承認を得た品質保証プログラムを適用することができる。

（品質重要度分類）

第４条　乙は、適切な製品品質を維持するため、安全性、信頼性、性能等の重要度に応じて甲が定める本契約内容の等級に従って管理を実施しなければならない。契約物品の等級及び等級に応じた要求事項は、仕様書に定める。

（疑義の処置）

第５条　乙は、本契約書等に定める要求事項に疑義又は困難がある場合には、作業を開始する前に甲に書面にて通知し、その指示に従わなければならない。

（逸脱許可）

第６条　乙は、契約物品について、契約書等に定める要求事項からの逸脱許可が必要と思わ

れる状況が生じた場合は、当該逸脱許可の申請を速やかに甲に提出するものとする。甲は、乙からの申請に基づき、当該逸脱許可の諾否について検討し、その結果を乙に通知するものとする。

（不適合の処理）

第７条　乙は、契約物品が契約書等の要求事項に適合しないとき又は適合しないことが見込まれるときは、遅滞なくその内容を甲に書面にて通知し、その指示に従わなければならない。

（重大不適合の処置）

第８条　乙は、重大不適合が発生した場合、直ちにその内容を甲に報告するとともに、プロジェクトへの影響を最小限に抑え、要求された品質を維持するため、その処置方法を検討し、速やかに甲に提案し、その承認を得なければならない。

（作業場所の通知）

第９条　乙は、本契約締結後、本契約の履行に必要なすべての作業場所を特定し、本契約に係る作業の着手前に、甲に書面にて通知するものとする。当該通知には、本契約の履行のために、乙が本契約の一部を履行させる下請負人の作業場所を含む。

（受注者監査）

第１０条　甲は、乙に対して事前に通知することにより、乙の品質保証に係る受注者監査を実施できるものとする。

（立入り権）

第１１条　乙は、本契約の履行状況を確認するため、甲、イーター機構、本契約の活動に関連する日本以外の加盟者の国内機関、フランス規制当局及びそれらから委託された第三者が、第９条に基づき特定した作業場所に立ち入る権利を有することに同意する。

２　前項に定める立入り権に基づく作業場所への立入りは、契約書等に定める中間検査等への立会い及び定期レビュー会合への参加の他、乙に対して事前に通知することにより、必要に応じて実施することができるものとする。

（文書へのアクセス）

第１２条　乙は、甲の求めに応じ、本契約の適切な管理運営を証明するために必要な文書及びデータを提供するものとする。

（作業停止の権限）

第１３条　甲は、乙が本契約の履行に当たって、契約書等の要求事項を満足できないことが認められる等、必要な場合は、乙に作業の停止を命じることができる。

２　乙は、甲から作業停止命令が発せられた場合には、可及的速やかに当該作業を停止し、甲の指示に従い要求事項を満足するよう必要な措置を講ずるものとする。

（下請負人に対する責任）

第１４条　乙は、下請負人に対し、本契約の一部を履行させる場合、本特約条項に基づく乙の一切の義務を乙の責任において当該下請負人に遵守させるものとする。

（情報のイーター機構等への提供）

第１５条　乙は、本契約の履行過程で甲に伝達された情報が、必要に応じてイーター機構及びフランス規制当局に提供される場合があることにあらかじめ同意するものとする。

以上

知的財産権特約条項

（知的財産権等の定義）

第１条　この特約条項において「知的財産権」とは、次の各号に掲げるものをいう。

一　特許法（昭和34年法律第121号）に規定する特許権、実用新案法（昭和34年法律第123号）に規定する実用新案権、意匠法（昭和34年法律第125号）に規定する意匠権、半導体集積回路の回路配置に関する法律（昭和60年法律第43号）に規定する回路配置利用権、種苗法（平成10年法律第83号）に規定する育成者権及び外国における上記各権利に相当する権利（以下総称して「産業財産権等」という。）

二　特許法に規定する特許を受ける権利、実用新案法に規定する実用新案登録を受ける権利、意匠法に規定する意匠登録を受ける権利、半導体集積回路の回路配置に関する法律に規定する回路配置利用権の設定の登録を受ける権利、種苗法に規定する品種登録を受ける地位及び外国における上記各権利に相当する権利

三　著作権法（昭和45年法律第48号）に規定する著作権（著作権法第21条から第28条までに規定する全ての権利を含む。）及び外国における著作権に相当する権利（以下総称して「著作権」という。）

四　前各号に掲げる権利の対象とならない技術情報のうち、秘匿することが可能なものであって、かつ、財産的価値のあるものの中から、甲乙協議の上、特に指定するもの（以下「ノウハウ」という。）を使用する権利

２　この特約条項において「発明等」とは、次の各号に掲げるものをいう。

一　特許権の対象となるものについてはその発明

二　実用新案権の対象となるものについてはその考案

三　意匠権、回路配置利用権及び著作権の対象となるものについてはその創作、育成者権の対象となるものについてはその育成並びにノウハウを使用する権利の対象となるものについてはその案出

３　この契約書において知的財産権の「実施」とは、特許法第２条第３項に定める行為、実用新案法第２条第３項に定める行為、意匠法第２条第２項に定める行為、半導体集積回路の回路配置に関する法律第２条第３項に定める行為、種苗法第２条第５項に定める行為、著作権法第21条から第28条までに規定する全ての権利に基づき著作物を利用する行為、種苗法第２条第５項に定める行為及びノウハウを使用する行為をいう。

（乙が単独で行った発明等の知的財産権の帰属）

第２条　甲は、本契約に関して、乙が単独で発明等行ったときは、乙が次の各号のいずれの規定も遵守することを書面にて甲に届け出た場合、当該発明等に係る知的財産権を乙から譲り受けないものとする。

一　乙は、本契約に係る発明等を行った場合には、次条の規定に基づいて遅滞なくその旨を甲に報告する。

二　乙は、甲が国の要請に基づき公共の利益のために特に必要があるとしてその理由を明らかにして求める場合には、無償で当該知的財産権を実施する権利を国に許諾する。

三　乙は、当該知的財産権を相当期間活用していないと認められ、かつ、当該知的財産権を相当期間活用していないことについて正当な理由が認められない場合において、甲が国の要請に基づき当該知的財産権の活用を促進するために特に必要があるとしてその理由を明らかにして求めるときは、当該知的財産権を実施する権利を第三者に許諾する。

四　乙は、第三者に当該知的財産権の移転又は当該知的財産権についての専用実施権（仮専用実施権を含む。）若しくは専用利用権の設定その他日本国内において排他的に実施する権利の設定若しくは移転の承諾（以下「専用実施権等の設定等」という。）をするときは、合併又は分割により移転する場合及び次のイからハまでに規定する場合を除き、あらかじめ甲に届け出、甲の承認を受けなければならない。

イ　子会社（会社法（平成17年法律第86号）第２条第３号に規定する子会社をいう。以下同じ。）又は親会社（会社法第２条第４号に規定する親会社をいう。以下同じ。）に当該知的財産権の移転又は専用実施権等の設定等をする場合

ロ　承認ＴＬＯ（大学等における技術に関する研究成果の民間事業者への移転の促進に関する法律（平成10年法律第52号）第４条第１項の承認を受けた者（同法第５条第１項の変更の承認を受けた者を含む。））又は認定ＴＬＯ（同法第11条第１項の認定を受けた者）に当該知的財産権の移転又は専用実施権等の設定等をする場合

ハ　乙が技術研究組合である場合、乙がその組合員に当該知的財産権を移転又は専用実施権等の設定等をする場合

2　乙は、前項に規定する書面を提出しない場合、甲から請求を受けたときは当該知的財産権を甲に譲り渡さなければならない。

3　乙は、第１項に規定する書面を提出したにもかかわらず、同項各号の規定のいずれかを満たしておらず、かつ、満たしていないことについて正当な理由がないと甲が認める場合において、甲から請求を受けたときは当該知的財産権を無償で甲に譲り渡さなければならない。

（知的財産権の報告）

第３条　前条に関して、乙は、本契約に係る産業財産権等の出願又は申請を行うときは、出願又は申請に際して提出すべき書類の写しを添えて、あらかじめ甲にその旨を通知しなければならない。

2　乙は、産業技術力強化法（平成12年法律第44号）第17条第１項に規定する特定研

究開発等成果に該当するもので、かつ、前項に係る国内の特許出願、実用新案登録出願、意匠登録出願を行う場合は、特許法施行規則（昭和35年通商産業省令第10号）、実用新案法施行規則（昭和35年通商産業省令第11号）及び意匠法施行規則（昭和35年通商産業省令第12号）等を参考にし、当該出願書類に国の委託事業に係る研究の成果による出願である旨を表示しなければならない 。

3　乙は、第１項に係る産業財産権等の出願又は申請に関して設定の登録等を受けた場合には、設定の登録等の日から60日以内（ただし、外国にて設定の登録等を受けた場合は90日以内）に、甲にその旨書面により通知しなければならない。

4　乙は、本契約に係る産業財産権等を自ら実施したとき及び第三者にその実施を許諾したとき（ただし、第５条第４項に規定する場合を除く。）は、実施等した日から60日以内（ただし、外国にて実施等をした場合は90日以内）に、甲にその旨書面により通知しなければならない。

5　乙は、本契約に係る産業財産権等以外の知的財産権について、甲の求めに応じて、自己による実施及び第三者への実施許諾の状況を書面により甲に報告しなければならない。

（乙が単独で行った発明等の知的財産権の移転）

第４条　乙は、本契約に関して乙が単独で行った発明等に係る知的財産権を第三者に移転する場合（本契約の成果を刊行物として発表するために、当該刊行物を出版する者に著作権を移転する場合を除く。）には、第２条から第６条まで及び第12条の規定の適用に支障を与えないよう当該第三者に約させなければならない。

2　乙は、前項の移転を行う場合には、当該移転を行う前に、甲にその旨書面により通知し、あらかじめ甲の承認を受けなければならない。ただし、乙の合併又は分割により移転する場合及び第２条第１項第４号イからハまでに定める場合には、この限りでない。

3　乙は、第１項に規定する第三者が乙の子会社又は親会社（これらの会社が日本国外に存する場合に限る。）である場合には、同項の移転を行う前に、甲に事前連絡の上、必要に応じて甲乙間で調整を行うものとする。

4　乙は、第１項の移転を行ったときは、移転を行った日から60日以内（ただし、外国にて移転を行った場合は90日以内）に、甲にその旨書面により通知しなければならない。

5　乙が第１項の移転を行ったときは、当該知的財産権の移転を受けた者は、当該知的財産権について、第２条第１項各号及び第３項並びに第３条から第６条まで及び第12条の規定を遵守するものとする。

（乙が単独で行った発明等の知的財産権の実施許諾）

第５条　乙は、本契約に関して乙が単独で行った発明等に係る知的財産権について第三者に実施を許諾する場合には、第２条、本条及び第12条の規定の適用に支障を与えないよう当該第三者に約させなければならない。

2　乙は、本契約に関して乙が単独で行った発明等に係る知的財産権に関し、第三者に専用実施権等の設定等を行う場合には、当該設定等を行う前に、甲にその旨書面により通知し、あらかじめ甲の書面による承認を受けなければならない。ただし、乙の合併又は分割により移転する場合及び第２条第１項第４号イからハまでに定める場合は、この限りではない。

3　乙は、前項の第三者が乙の子会社又は親会社（これらの会社が日本国外に存する場合に限る。）である場合には、同項の専用実施権等の設定等を行う前に、甲に事前連絡のうえ、必要に応じて甲乙間で調整を行うものとする。

4　乙は、第２項の専用実施権等の設定等を行ったときは、設定等を行った日から60日以内（ただし、外国にて設定等を行った場合は90日以内）に、甲にその旨書面により通知しなければならない。

5　甲は、本契約に関して乙が単独で行った発明等に係る知的財産権を無償で自ら試験又は研究のために実施することができる。甲が　甲のために第三者に製作させ、又は業務を代行する第三者に再実施権を許諾する場合は、乙の承諾を得た上で許諾するものとし、その実施条件等は甲乙協議のうえ決定する。

（乙が単独で行った発明等の知的財産権の放棄）

第６条　乙は、本契約に関して乙が単独で行った発明等に係る知的財産権を放棄する場合は、当該放棄を行う前に、甲にその旨書面により通知しなければならない。

（甲及び乙が共同で行った発明等の知的財産権の帰属）

第７条　甲及び乙は、本契約に関して甲乙共同で発明等を行ったときは、当該発明等に係る知的財産権について共同出願契約を締結し、甲乙共同で出願又は申請するものとし、当該知的財産権は甲及び乙の共有とする。ただし、乙は、次の各号のいずれの規定も遵守することを書面にて甲に届け出なければならない。

一　乙は、甲が国の要請に基づき公共の利益のために特に必要があるとしてその理由を明らかにして求める場合には、無償で当該知的財産権を実施する権利を国に許諾する。

二　乙は、当該知的財産権を相当期間活用していないと認められ、かつ、当該知的財産権を相当期間活用していないことについて正当な理由が認められない場合において、甲が国の要請に基づき当該知的財産権の活用を促進するために特に必要があるとしてその理由を明らかにして求めるときは、当該知的財産権を実施する権利を甲が指定する 第三者に許諾する。

2　前項の場合、出願又は申請のための費用は原則として、甲、乙の持分に比例して負担するものとする。

3　乙は、第１項に規定する書面を提出したにもかかわらず、同項各号の規定のいずれかを満たしておらず、さらに満たしていないことについて正当な理由がないと甲が認める場合において、甲から請求を受けたときは当該知的財産権のうち乙が所有する部分を無償で甲に譲り渡さなければならない。

（甲及び乙が共同で行った発明等の知的財産権の移転）

第８条　甲及び乙は、本契約に関して甲乙共同で行った発明等に係る共有の知的財産権のうち、自らが所有する部分を相手方以外の第三者に移転する場合には、当該移転を行う前に、その旨を相手方に書面により通知し、あらかじめ相手方の書面による同意を得なければならない。

（甲及び乙が共同で行った発明等の知的財産権の実施許諾）

第９条　甲及び乙は、本契約に関して甲乙共同で行った発明等に係る共有の知的財産権について第三者に実施を許諾する場合には、その許諾の前に相手方に書面によりその旨通知し、あらかじめ相手方の書面による同意を得なければならない。

（甲及び乙が共同で行った発明等の知的財産権の実施）

第10条　甲は、本契約に関して乙と共同で行った発明等に係る共有の知的財産権を試験又は研究以外の目的に実施しないものとする。ただし、甲は甲のために第三者に製作させ、又は業務を代行する第三者に実施許諾する場合は、無償にて当該第三者に実施許諾することができるものとする。

２　乙が本契約に関して甲と共同で行った発明等に係る共有の知的財産権について自ら商業的実施をするときは、甲が自ら商業的実施をしないことに鑑み、乙の商業的実施の計画を勘案し、事前に実施料等について甲乙協議の上、別途実施契約を締結するものとする。

（甲及び乙が共同で行った発明等の知的財産権の放棄）

第11条　甲及び乙は、本契約に関して甲乙共同で行った発明等に係る共有の知的財産権を放棄する場合は、当該放棄を行う前に、その旨を相手方に書面により通知し、あらかじめ相手方の書面による同意を得なければならない。

（著作権の帰属）

第12条　第２条第１項及び第７条第１項の規定にかかわらず、本契約の目的として作成され納入される著作物に係る著作権については、全て甲に帰属する。

２　乙は、前項に基づく甲及び甲が指定する 第三者による実施について、著作者人格権を行使しないものとする。また、乙は、当該著作物の著作者が乙以外の者であるときは、当該著作者が著作者人格権を行使しないように必要な措置を執るものとする。

３　乙は、本契約によって生じた著作物及びその二次的著作物の公表に際し、本契約による成果である旨を明示するものとする。

（合併等又は買収の場合の報告等）

第13条　乙は、合併若しくは分割し、又は第三者の子会社となった場合（乙の親会社が変更した場合を含む。第３項第１号において同じ。）は、甲に対しその旨速やかに報告し

なければならない。

2　前項の場合において、国の要請に基づき、国民経済の健全な発展に資する観点に照らし、本契約の成果が事業活動において効率的に活用されないおそれがあると甲が判断したときは、乙は、本契約に係る知的財産権を実施する権利を甲が指定する者に許諾しなければならない。

3　乙は、本契約に係る知的財産権を第三者に移転する場合、次の各号のいずれの規定も遵守することを当該移転先に約させなければならない。

一　合併若しくは分割し、又は第三者の子会社となった場合は、甲に対しその旨速やかに報告する。

二　前号の場合において、国の要請に基づき、国民経済の健全な発展に資する観点に照らし本業務の成果が事業活動において効率的に活用されないおそれがあると甲が判断したときは、本契約に係る知的財産権を実施する権利を甲が指定する者に許諾する。

三　移転を受けた知的財産権をさらに第三者に移転するときは、本項各号のいずれの規定も遵守することを当該移転先に約させる。

（秘密の保持）

第14条　甲及び乙は、第２条及び第７条の発明等の内容を出願公開等により内容が公開される日まで他に漏えいしてはならない。ただし、あらかじめ書面により出願又は申請を行った者の了解を得た場合はこの限りではない。

（委任・下請負）

第15条　乙は、本契約の全部又は一部を第三者に委任し、又は請け負わせた場合においては、当該第三者に対して、本特約条項の各規定を準用するものとし、乙はこのために必要な措置を講じなければならない。

2　乙は、前項の当該第三者が本特約条項に定める事項に違反した場合には、甲に対し全ての責任を負うものとする。

（協議）

第16条　第２条及び第７条の場合において、単独若しくは共同の区別又は共同の範囲等について疑義が生じたときは、甲乙協議して定めるものとする。

（有効期間）

第17条　本特約条項の有効期限は、本契約の締結の日から当該知的財産権の消滅する日までとする。

以上

イーター実施協定の調達に係る情報及び知的財産に関する特約条項

本契約については、本契約一般条項によるほか、次の特約条項（以下「本特約条項」という。）による。

（定義）

第１条　本契約において「知的財産権」とは、次の各号に掲げるものをいう。

（１）　特許法（昭和３４年法律第１２１号）に規定する特許権又は特許を受ける権利

（２）　実用新案法（昭和３４年法律第１２３号）に規定する実用新案権又は実用新案登録を受ける権利

（３）　意匠法（昭和３４年法律第１２５号）に規定する意匠権又は意匠登録を受ける権利

（４）　商標法（昭和３４年法律第１２７号）に規定する商標権又は商標登録を受ける権利

（５）　半導体集積回路の回路配置に関する法律（昭和６０年法律第４３号）に規定する回路配置利用権又は回路配置利用権の設定の登録を受ける権利

（６）　種苗法（平成１０年法律第８３号）に規定する育成者権又は品種登録を受ける地位

（７）　著作権法（昭和４５年法律第４８号）に規定するプログラムの著作物及びデータベースの著作物の著作権

（８）　外国における、第１号から第７号に記載の各知的財産権に相当する権利

（９）　不正競争防止法（平成５年法律第４７号）に規定する営業秘密に関して法令により定められた権利又は法律上保護される利益に係る権利（以下「営業秘密」という。）

２　本契約において「情報」とは、法律による保護を受けることができるか否かを問わず、発明や発見の記述のみならず、公表されている資料、図書、意匠、計算書、報告書その他の文書、研究開発に関する記録された資料又は方法並びに発明及び発見に関する説明であって、前項に定義する知的財産権を除いたものをいう。

３　本契約において「発明等」とは、特許権の対象となるものについては発明、実用新案権の対象となるものについては考案、意匠権、商標権、回路配置利用権及びプログラム等の著作権の対象となるものについては創作、育成者権の対象となるものについては育成並びに営業秘密を使用する権利の対象となるものについては案出をいう。

４　本契約において「背景的な知的財産権」とは、本契約の締結前に取得され、開発され、若しくは創出された知的財産権又は本契約の範囲外において取得され、開発され、若しくは創出される知的財産権をいう。

５　本契約において「背景的な営業秘密」とは、背景的な知的財産権のうちの営業秘密をいう。

６　本契約において「生み出された知的財産権」とは、本契約の履行の過程で、乙が単独で又は甲と共同で取得し、開発し、又は創出した知的財産権をいう。

７　本契約において「協定」とは、「イーター事業の共同による実施のためのイーター国際核融合エネルギー機構の設立に関する協定」をいう。

８　本契約において「附属書」とは、協定の「情報及び知的財産に関する附属書」をいう。

９　本契約において「イーター機構」とは、協定により設立された「イーター国際核融合エネルギー機構」をいう。

１０　本契約において「加盟者」とは、協定の締約者をいう。

１１　本契約において「国内機関」とは、各加盟者がイーター機構への貢献を行うに当たって、

その実施機関として指定する法人をいう。

１２　本契約において「団体」とは、国内機関又はイーター機構が協定の目的のために物品又は役務の提供に関する契約を締結する団体をいう。

１３　本契約において「理事会」とは、協定第６条に定める「理事会」をいう。

１４　本契約において「特許等」とは、特許、登録実用新案、登録意匠、登録商標、登録回路配置及び登録品種の総称をいう。

（情報の普及）

第２条　乙は、加盟者又は国内機関が、本契約の実施により直接に生じる情報（著作権の有無を問わない。）を非商業上の利用のため翻訳し、複製し、及び公に頒布する権利を有することに同意する。

２　乙は、前項により作成される著作権のある著作物の写しであって公に頒布されるすべてのものには、著作者が明示的に記名を拒否しない限り、著作者の氏名を明示することに同意する。

（発明等の報告）

第３条　乙は、本契約の履行の過程で発明等を創出した場合には（以下、かかる発明等を「本発明等」という。）、本発明の詳細とともに、速やかに甲に書面により報告するものとする。

２　乙は、甲が前項の本発明の詳細を含む報告をイーター機構及び加盟者に提供すること、並びに、甲が自ら実施する核融合の研究開発に関する活動のため必要とする場合において乙以外の日本の団体に提供することに、あらかじめ同意する。

（生み出された知的財産権の帰属等）

第４条　本発明等に係る知的財産権は、乙に帰属する。ただし、本発明等が甲乙共同で創出したものである場合、当該本発明等に係る知的財産権は甲及び乙の共有となる。

２　前項ただし書きの甲及び乙の共有に係る知的財産権について、甲及び乙は、知的財産権の持分、費用分担、その他必要な事項を協議の上、別途取決めを締結するものとする。

３　乙は、甲及び乙の共有に係る当該知的財産権を自ら又は乙が指定する者が実施する場合、甲及び乙の持分に応じてあらかじめ定める不実施補償料を甲に支払うものとする。

（発明等の取扱い）

第５条　乙は、本発明等に関し、(i)特許等の登録に必要な手続を行うか、(ii)営業秘密として管理するか、又は、(iii)(i)若しくは(ii)のいずれも行わないかという取扱いについて速やかに決定の上、甲に決定内容を書面により報告する。ただし、当該本発明等が甲乙共同で創出したものである場合、甲及び乙は、上記(i)ないし(iii)の取扱いについて別途協議の上決定する。

２　乙は、前項に基づく本発明等の取扱いに関する決定内容について、甲がイーター機構及び加盟者に提供すること、並びに甲が自ら実施する核融合の研究開発に関する活動のため必要とする場合において乙以外の日本の団体に提供することに、あらかじめ同意する。

３　乙は、乙が第１項の(iii)の取扱いをすることを決定した本発明等について、甲又はイーター機構の求めがあった場合は、当該本発明等の知的財産権を甲又はイーター機構に承継させるものとする。

（背景的な知的財産権の認定）

第６条　乙が本契約の履行の過程で利用する背景的な知的財産権は、甲及び乙が別途締結する覚書（以下「覚書」という。）に定める。覚書に定めのない知的財産権であって、本契約の履行の過程で利用されるものは、生み出された知的財産権とみなす。

２　乙は、覚書に掲げる知的財産権の内容に変更が生じたときは、速やかに当該変更内容を甲に書面により報告するものとする。

３　乙は、本契約締結後に本契約の履行の過程で利用すべき背景的な知的財産権の存在が判明したときは、速やかに、当該背景的な知的財産権が、本契約の範囲外において存在することを証明する具体的な証拠とともに、本契約締結前に報告できなかった正当な理由を甲に書面により報告するものとする。

４　甲は、前項の報告を受けた場合は、乙から提出された証拠及び理由の妥当性を検討の上、必要に応じて、甲乙協議の上、覚書の改訂を行うものとする。

５　乙は、本条に基づく報告について、甲がイーター機構及び加盟者に提供すること、並びに甲が自ら実施する核融合の研究開発に関する活動のため必要とする場合において乙以外の日本の団体に提供することに、あらかじめ同意する。

６　乙は、本契約の履行の過程で背景的な知的財産権を利用する場合は、必要な実施権又は利用権を確保し、甲並びに契約物品の提供を受けるイーター機構及び関連する他の加盟者が、支障なく当該物品を使用することができるようにしなければならない。甲並びにイーター機構及び関連する他の加盟者が当該背景的な知的財産権に関し、第三者から知的財産権侵害の苦情を受けた場合には、乙は自己の責任と費用でその苦情を防御又は解決し、当該苦情に起因する損失、損害又は経費のすべてを補償し、甲並びにイーター機構及び関連する他の加盟者に対して何らの損害も与えないものとする。

（背景的な知的財産権の帰属）

第７条　本契約は、背景的な知的財産権の帰属について何ら変更を生じさせるものではない。

（創出者への補償等）

第８条　乙は、乙の従業者又は役員（以下「従業者等」という。）が創出した本発明等に係る知的財産権を、適用法令に従い、乙の費用と責任において従業者等から承継するものとする。

（生み出された知的財産権の実施）

第９条　生み出された知的財産権の実施権の許諾（利用権の付与を含む。以下同じ。）については、次の各号による。

（１）　乙は、甲が自ら実施する研究開発に関する活動のために、平等及び無差別の原則に基づき、当該生み出された知的財産権の取消し不能な、非排他的な、かつ、無償の実施権を甲に許諾する。当該実施権は、甲が第三者に再実施を許諾する権利を伴う。

（２）　乙は、公的な支援を得た核融合の研究開発に関する計画のため、平等及び無差別の原則に基づき、当該生み出された知的財産権の取消し不能な、非排他的な、かつ、無償の実施権を加盟者及びイーター機構に許諾する。当該実施権は、イーター機構及び加盟者が第三

者（加盟者については、それぞれの領域内の第三者に限る。）に再実施を許諾する権利を伴う。

（３）　乙は、核融合の商業上の利用のため、平等及び無差別の原則に基づき、生み出された知的財産権の非排他的な実施権を加盟者に許諾する。当該実施権は、加盟者が第三者（それぞれの領域内の第三者に限る。）に再実施を許諾する権利を伴う。当該実施権の許諾に係る条件は、乙が第三者に対して当該生み出された知的財産権の実施権を許諾するときの条件よりも不利でないものとする。

（４）　乙は、生み出された知的財産権の核融合以外の分野における利用を可能にするため、加盟者、国内機関、団体及び第三者と商業上の取決めを締結することが奨励される。

２　前項の生み出された知的財産権が甲と乙の共有に係るものである場合、甲と乙は、共同して同項に基づく実施権の許諾を行う。

３　乙は、第１項に規定する実施権及び再実施を許諾する権利の許諾の記録を保持し、甲の求めに応じこれを甲に提供する。乙は、上記記録に変更がある場合は、各年の上半期については、７月１５日までに、下半期については翌年の１月１５日までに甲に報告書を提出する。

４　乙は、甲が当該記録をイーター機構及び加盟者に提供すること、並びに甲が自ら実施する核融合の研究開発に関する活動のため必要とする場合において乙以外の日本の団体に提供することに、あらかじめ同意する。

５　乙は、非加盟者の第三者に対し、生み出された知的財産権の実施権を許諾する場合には、理事会が全会一致で決定する規則に従うものとし、甲の事前の同意を得て行うものとする。当該第三者への実施権の許諾は、平和的目的のための使用に限り行うものとする。ただし、当該規則の決定までは、非加盟者の第三者に対する当該実施権の許諾は認めない。

６　乙は、イーター機構又は加盟者に対して直接実施許諾できない理由があるときには、甲が第１項第２号及び第３号に基づきイーター機構又は加盟者に再実施を許諾するための権利を伴う、生み出された知的財産権の取消し不能な、非排他的な、かつ、無償の実施権を甲に許諾するものとする。

（背景的な知的財産権の実施）

第１０条　乙が契約物品その他仕様書に定める納入品に用いる背景的な知的財産権の実施権の許諾については、次の各号による。

（１）　乙は、当該背景的な知的財産権（ただし、背景的な営業秘密を含まない。）が次のいずれかの要件を満たすときは、甲が自ら実施する核融合の研究開発に関する活動のために、平等及び無差別の原則に基づき、当該背景的な知的財産権の取消し不能な、非排他的な、かつ、無償の実施権を甲に許諾する。当該実施権は、甲が研究機関及び高等教育機関に再実施を許諾する権利を伴う。

イ　イーター施設を建設し、運転し、及び利用するために必要とされること又はイーター施設に関連する研究開発のための技術を用いるために必要とされること。

ロ　イーター機構に提供される契約物品を保守し、又は修理するために必要とされること。

ハ　公的な調達に先立ち理事会が必要であると決定する場合において必要とされること。

（２）　乙は、当該背景的な知的財産権（ただし、背景的な営業秘密を含まない。）が次のいず

れかの要件を満たすときは、公的な支援を得た核融合の研究開発に関する計画のため、平等及び無差別の原則に基づき、当該背景的な知的財産権の取消し不能な、非排他的な、かつ、無償の実施権を加盟者及びイーター機構に許諾する。当該実施権は、イーター機構が再実施を許諾する権利並びに加盟者がそれぞれの領域内において研究機関及び高等教育機関に再実施を許諾する権利を伴う。

イ　イーター施設を建設し、運転し、及び利用するために必要とされること又はイーター施設に関連する研究開発のための技術を用いるために必要とされること。

ロ　イーター機構に提供される契約物品を保守し、又は修理するために必要とされること。

ハ　公的な調達に先立ち理事会が必要であると決定する場合において必要とされること。

（３）　乙は、当該背景的な営業秘密が次のいずれかの要件を満たすときは、当該背景的な営業秘密（イーター施設の建設、運転、保守及び修理のための手引書又は訓練用教材を含む。）の取消し不能な、非排他的な、かつ、無償の利用権をイーター機構に付与する。当該利用権は、イーター機構が、協定の情報及び知的財産に関する附属書第４．２．３条（ｂ）に基づき、その下請負人に再利用権を付与する権利及びフランス規制当局に当該背景的な営業秘密を伝達する権利を伴う。

イ　イーター施設を建設し、運転し、及び利用するために必要とされること又はイーター施設に関連する研究開発のための技術を用いるために必要とされること。

ロ　イーター機構に提供される契約物品を保守し、又は修理するために必要とされること。

ハ　公的な調達に先立ち理事会が必要であると決定する場合において必要とされること。

ニ　イーター施設に対して規制当局が要請する安全、品質保証及び品質管理のために必要とされること。

（４）　乙は、当該背景的な営業秘密が次のいずれかの要件を満たすときは、加盟者が公的な支援を得た核融合の研究開発に関する計画のため、金銭上の補償を伴う私的契約によって、当該背景的な営業秘密の商業上の利用権の付与又は当該背景的な営業秘密を用いた契約物品と同一の物品の提供を求めた場合には、当該契約締結のため最善の努力を払うこととする。当該利用権の付与又は物品の提供に係る条件は、乙が第三者に対して当該背景的な営業秘密の利用権を付与し、又は当該背景的な営業秘密を用いた同一の物品を提供するときの条件よりも不利でないものとする。当該利用権が付与される場合には、当該利用権は、利用権者が契約上の義務を履行しない場合にのみ取り消すことができる。

イ　イーター施設を建設し、運転し、及び利用するために必要とされること又はイーター施設に関連する研究開発のための技術を用いるために必要とされること。

ロ　イーター機構に提供される契約物品を保守し、又は修理するために必要とされること。

ハ　公的な調達に先立ち理事会が必要であると決定する場合において必要とされること。

（５）　乙は、当該背景的な知的財産権について、加盟者が核融合の商業上の利用のため、当該背景的な知的財産権の実施権の許諾を受けること又は当該背景的な知的財産権を用いた契約物品と同一の物品の提供を求めた場合には、当該要求の実現のため最善の努力を払うこととする。当該背景的な知的財産権の実施権は、当該加盟者の領域内にある第三者による核融合の商業上の利用のために当該加盟者が再実施を許諾する権利を伴う。当該背景的な知的財産権の実施権の許諾に係る条件は、乙が第三者に対して当該背景的な知的財産権の実施権を

許諾するときの条件よりも不利でないものとする。当該背景的な知的財産権の実施権は、実施権者が契約上の義務を履行しない場合にのみ取り消すことができる。

（６）　乙は、前号に定める目的以外の商業上の目的のため、加盟者から求めがあった場合は、当該背景的な知的財産権が次のいずれかの要件を満たすときは、当該背景的な知的財産権の実施権を許諾することが奨励される。乙が、当該背景的な知的財産権の実施権を当該加盟者に許諾する場合には、当該背景的な知的財産権の実施権は平等及び無差別の原則に基づき許諾されるものとする。

イ　イーター施設を建設し、運転し、及び利用するために必要とされること又はイーター施設に関連する研究開発のための技術を用いるために必要とされること。

ロ　イーター機構の提供される契約物品を保守し、又は修理するために必要とされること。

ハ　公的な調達に先立ち理事会が必要であると決定する場合において必要とされること。

２　前項の背景的な知的財産権が甲と乙の共有に係るものである場合、甲と乙は、共同して当該背景的な知的財産権の実施権の許諾を行う。

３　乙は、第１項に規定する実施権及び再実施を許諾する権利の許諾の記録を保持し、甲の求めに応じこれを甲に提供する。乙は、上記記録に変更がある場合は、各年の上半期については７月１５日までに、下半期については翌年の１月１５日までに甲に報告書を提出する。

４　乙は、甲が当該記録をイーター機構及び加盟者に提供すること、並びに甲が自ら実施する核融合の研究開発に関する活動のため必要とする場合において乙以外の日本の団体に提供することに、あらかじめ同意する。

（知的財産権の帰属の例外）

第１１条　乙は、本契約の目的として作成される提出書類、プログラム及びデータベース等の納入品に係る著作権は、すべて甲に帰属することを認め、乙が著作権を有する場合（第８条に基づき従業者等から承継する場合を含む。）であっても、乙は、かかる著作権（著作権法第 21 条から第 28 条までに定める全ての権利を含み、日本国内における権利に限らない。）を甲に譲渡する。かかる譲渡の対価は、本契約書に定める請負の対価に含まれる。

２　前項の規定により著作権を乙から甲に譲渡する場合において、当該著作物を乙が自ら創作したときは、乙は、著作者人格権を行使しないものとし、当該著作物を乙以外の第三者が創作したときは、乙は、当該第三者に著作者人格権を行使しないように必要な措置を講じるものとする。

（下請負人に対する責任）

第１２条　乙は、本契約一般条項の規定に従い、下請負人に対し本契約の一部を履行させる場合、本特約条項に基づく乙の一切の義務を乙の責任において当該下請負人に遵守させるものとする。

（有効期間）

第１３条　本契約一般条項の定めにかかわらず、本特約条項の定めは協定の終了後又は日本国政府の協定からの脱退後も効力を有する。

（言語）

第１４条　本特約条項に定める乙から甲への書面による報告は、和文だけでなく、英文でも提出することとし、両文書は等しく正文とする。

（疑義）

第１５条　本特約条項の解釈又は適用に関して疑義が生じた場合、協定の規定が本特約条項に優先する。

『本契約において遵守すべき「情報セキュリティの確保」に関する事項』

1　受注者は、契約の履行に関し、情報システム（情報処理及び通信に関わるシステムであって、ハードウェア、ソフトウェア及びネットワーク並びに記録媒体で構成されるものをいう。）を利用する場合には、QSTの情報及び情報システムを保護するために、情報システムからの情報漏えい、コンピュータウィルスの侵入等の防止その他必要な措置を講じなければならない。

2　受注者は、次の各号に掲げる事項を遵守するほか、QSTの情報セキュリティ確保のために、QSTが必要な指示を行ったときは、その指示に従わなければならない。

(1)　受注者は、契約の業務に携わる者（以下「業務担当者」という。）を特定し、それ以外の者に作業をさせてはならない。

(2)　受注者は、契約に関して知り得た情報（QSTに引き渡すべきコンピュータプログラム著作物及び 計算結果を含む。以下同じ。）を取り扱う情報システムについて、業務担当者以外が当該情報にアクセス可能とならないよう適切にアクセス制限を行うこと。

(3)　受注者は、契約に関して知り得た情報を取り扱う情報システムについて、ウィルス対策ツール及びファイアウォール機能の導入、セキュリティパッチの適用等適切な情報セキュリティ対策を実施すること。

(4)　受注者は、P2P ファイル交換ソフトウェア（Winny、WinMX、KaZaa、Share 等）及び SoftEther を導入した情報システムにおいて、契約に関して知り得た情報を取り扱ってはならない。

(5)　受注者は、QSTの承諾のない限り、契約に関して知り得た情報をQST又は受注者の情報システム以外の情報システム（業務担当者が所有するパソコン等）において取り扱ってはならない。

(6)　受注者は、委任をし、又は下請負をさせた場合は、当該委任又は下請負を受けた者の契約に関する 行為について、QSTに対し全ての責任を負うとともに、当該委任又は下請負を受けた者に対して、 情報セキュリティの確保について必要な措置を講ずるように努めなければならない。

(7)　受注者は、QSTが求めた場合には、情報セキュリティ対策の実施状況についての監査を受け入れ、 これに協力すること。

(8)　受注者は、QSTの提供した情報並びに受注者及び委任又は下請負を受けた者が契約業務のために収集した情報について、災害、紛失、破壊、改ざん、き損、漏えい、コンピュータウィルスによる 被害、不正な利用、不正アクセスその他の事故が発生、又は生ずるおそれのあることを知った場合は、直ちにQSTに報告し、QSTの指示に従うものとする。契約の終了後においても、同様とする。

なお、QSTの入札に参加する場合、又はQSTからの見積依頼を受ける場合にも、上記事項を遵守していただきます。

以上

コンピュータプログラム作成等業務特約条項

（目的物）

第１条　この契約の目的物は、次の各号の一又は二以上の組み合せに該当するコンピュータプログラムの著作物（データ、データベース、マニュアル及びドキュメンテーションを含む。以下同じ。）及び当該コンピュータプログラムによる計算結果であって、仕様書に定める範囲のものとする。

一　コンピュータプログラム（コンピュータプログラムの設計を含む。）著作物

二　甲が提供するコンピュータプログラムの著作物により得られた計算結果

三　乙が所有するコンピュータプログラムの著作物及びこれにより得られた計算結果

（権利の帰属等）

第２条　この契約により作成された目的物（第１条各号に掲げるものをいう。以下同じ。）に係る著作権その他この目的物の使用、収益及び処分（複製、翻訳、翻案、変更、譲渡・貸与及び二次的著作物の利用を含む。）に関する一切の権利は甲に帰属するものとする。ただし、本契約遂行のために使用するプログラム等のうち、本契約締結以前から、乙が所有するものについては、その著作権は乙に帰属するものとする。

２　乙は、この契約により作成された目的物について、甲又は甲の指定する者に対して著作者人格権を行使しないものとする。

（氏名の表示の制限）

第３条　乙は、第１条に規定する著作物に著作者氏名を表示しないものとする。

（第三者の権利の保護）

第４条　乙は、この業務の実施に関し第三者（著作者を含む。）の著作権その他の権利を侵害することのないよう必要な措置を自らの責任において講じなければならない。

（技術情報）

第５条　甲が、この業務の実施に関し、乙の保有する技術情報を知る必要が生じた場合には、乙は、この契約の業務に必要な範囲内において当該技術情報を甲に無償で提供しなければならない。

２　甲は、乙からの書面による事前の同意を得た場合を除き、前項により知り得た技術情報を第三者に提供しないものとする。

（プログラム開発に必要な技術情報）

第６条　甲は、仕様書に定めるところにより、乙がこの業務の実施に必要な計算コードその他必要な技術情報を乙に使用させることがある。

（公表）

第７条　乙は、目的物を甲に引き渡す前に、これを第三者に公表してはならない。

２　乙は、この契約により得られた成果について発表し、若しくは公開し、又は第三者に提供しようとするとき、及びこの業務の実施によって知り得た技術情報を第三者に開示しようとするときは、あらかじめ書面による甲の承認を得なければならない。

以上

IDM UID
2F6S75

VERSION CREATED ON / VERSION / STATUS
30 Jul 2025 / 2.2 / Approved

EXTERNAL REFERENCE / VERSION

Annex B

Technical Specification for Blanket First Assembly Tooling

Technical Specification document describing the scope of work and deliverables for the development of the tooling necessary for the first assembly of Shield Blocks and Temporary First Walls.

Approval Process			
	Name	*Action*	*Job Title / Affiliation*
Author	**Kadi J.**	**30 Jul 2025:signed**	**ITER Project Associate**
Co-Authors			
Reviewers	**Chatzivasileiou A.**	**30 Jul 2025:recommended (Short Cycle)**	**Civil Quality Engineer**
Previous Versions Reviews	**Chastel F.** **Doljac G.** **Hery R.** **Murakami S.** **Noguchi Y.** **Palmer J.** **Reich J.** **Torralba pinedo A.**	**25 Jul 2025:recommended v2.1** **24 Jul 2025:recommended v2.1** **22 Jul 2025:recommended v2.1** **24 Jul 2025:recommended v2.1** **23 Jul 2025:recommended v2.1** **22 Jul 2025:recommended v2.1** **25 Jul 2025:recommended v2.1** **24 Jul 2025:recommended v2.1**	**IO/DG/ESD/ACSD** **IO/DG/ESD/PPED** **IO/DG/ESD/ACSD** **IO/DG/ESD/ACSD** **National Institutes for Quantum Sci...** **IO/DG/CP/MAP/RHP** **IO/DG/CP/MAP** **IO/DG/SID/CID/CMS**
Approver	**Orlandi S.**	**31 Jul 2025:approved**	**Head of ITER Construction Project**
Information Protection Level: Non-Public - Unclassified *RO: Hery Raphael*			
Read Access	**LG: Annex B reviewers, LG: Annex B reviewers 2, LG: IO TRO 2.3.P1.JA.01, LG: IO PA PT 2.3.P1.JA.01, LG: DA PA PT 2.3.P1.JA.01, AD: ITER, AD: IO_Director-General, AD: External Management Advisory Board, AD: IDM_Controller, AD: Nuclear Safety Inspectors, AD: Auditors, AD: ITER Management Assessor, pro...**		

#drn#

DISCLAIMER : UNCONTROLLED WHEN PRINTED – PLEASE CHECK THE STATUS OF THE DOCUMENT IN IDM

Change Log			
Technical Specification for Blanket First Assembly Tooling (2F6S75)			
Version	***Latest Status***	***Issue Date***	***Description of Change***
v1.0	Signed	20 Feb 2025	
v1.1	Signed	07 Mar 2025	The updates aim to better reflect the recent discussions between IO and JADA.
v2.0	Approved	25 Apr 2025	First consolidated version with many updates
v2.1	Signed	22 Jul 2025	List of Sign-Off Authorities changed No change of content compared to v2.0
v2.2	Approved	30 Jul 2025	Updates in sections 8.1 and 9.1 according to QARO's suggestions.

SUPPLY

Table of Contents

1 PURPOSE 3

2 ACRONYMS & DEFINITIONS 3

2.1 Acronyms 3

2.2 Definitions 5

3 APPLICABLE DOCUMENTS & CODES AND STANDARDS 6

3.1 Applicable Documents 6

3.2 Reference documents 7

3.3 Applicable Codes and Standards 8

4 SCOPE OF WORK 9

4.1 Overview of Blanket Modules Assembly 9

4.2 Final design of End Effectors and Tools 16

4.2.1 Shield Block Gripper 17

4.2.1.1 Interfaces with the Shield Block 21

4.2.2 Flexible Cartridge Bolt Torquing Tool Base 22

4.2.3 Electrical Strap Bolt Torquing Tool 24

4.2.4 Viewing Tool 31

4.2.5 Shield Block Pulling and Welding Tool Base 32

4.2.6 Coaxial Connector Welding Tool 39

4.2.7 Coaxial Connector Cutting Tool 42

4.2.8 Monoaxial Connector Pulling Tool 44

4.2.9 Monoaxial Connector Alignment Measurement Tool 49

4.2.10 Monoaxial Connector Welding Tool 50

4.2.11 Monoaxial Connector Cutting Tool 52

4.2.12 End Cap Handling Tool 54

4.2.13 End Cap Welding Tool 56

4.2.14 End Cap Cutting Tool 57

4.2.15 15ND Gripper 58

4.2.16 15ND Tool Base 62

4.2.17 First Wall Gripper 64

4.2.18 First Wall Central Bolt Torquing End Effector 66

4.2.19 Blanket Tooling Supporting Equipment 71

4.2.20 In-Vessel Tool Storage 77

4.2.20.1 Tool Storage Rack 77

4.2.20.2 Nacelle Tool Storage 79
4.2.21 End Effector design constraints 80
4.2.21.1 Enveloping dimensions 80
4.2.21.2 Pre-SRO transfer context 83
4.2.22 Tool design constraints 87
4.3 Control System for Blanket Tooling 89
4.3.1 Control System Architecture Requirements 89
4.3.2 Control System Detailed Requirements 94
4.3.3 Control System Scope and Indicative Bill of Materials 97
4.4 Production of final End Effectors, Tools and I&C systems 100
4.5 Factory Acceptance Tests 100
4.6 Site Acceptance Tests 100
5 LOCATION FOR SCOPE OF WORK EXECUTION 101
6 IO DOCUMENTS & IO FREE ISSUE ITEMS 101
7 DELIVERABLES AND SCHEDULE MILESTONES 101
7.1.1 Schedule for delivery 101
7.1.2 List of deliverable documentation 103
8 OVERARCHING REQUIREMENTS 104
8.1 Quality Assurance requirements 104
8.2 Nuclear class Safety 105
8.3 Seismic class 105
9 SPECIAL MANAGEMENT REQUIREMENTS 105
9.1 Review meetings 105
9.2 CAD design requirements 106
10 APPENDICES 106

SUPPLY

1 Purpose

This Technical Specification describes the scope of work and deliverables to develop the tooling necessary for the first assembly of all Shield Blocks and Temporary First Walls.

2 Acronyms & Definitions

2.1 Acronyms

The following acronyms are the main ones relevant to this document.

Abbreviation	Description
15NDG	15ND Gripper
15NDTB	15ND Tool Base
AD	Applicable Documents
ALARA	As Low As Reasonably Achievable
AVC	Arc Voltage Control (for TIG welding tool)
BAT	Blanket Assembly Transporter
BM	Blanket Module (FW + SB)
BMTS	Blanket Module Transfer System
BRHS	Blanket Remote Handling System
BT	Bolting Tool
BTSE	Blanket Tooling Supporting Equipment
CB	Central Bolt
CBT	Central bolt Bolting Tool
CC	Coaxial Connector
CCCT	Coaxial Connector Cutting Tool
CCPT	Coaxial Connector Pulling Tool
CCT / ECCT	Cap Cutting Tool / End -
CCWT	Coaxial Connector Welding Tool
CHT / ECHT	Cap Handling Tool / End -
CMAF	CAD Model Approval Form
CMM	Configuration Management Model
COG	Centre Of Gravity
CRO	Contract Responsible Officer
CWT /ECWT	Cap Welding Tool / End -
DCM	Design Compliance Matrix
DDP	Design Development Plan
DM	Detailed Model
DMNP	Dexterous Manipulator
DOF	Degrees of Freedom
ECHT	End Cap Holding Tool
ECWT	End Cap Welding Tool
ECCT	End Cap Cutting Tool
EDH	Electrical Design Handbook
EDR	Equipment and Documentation Review

SUPPLY

EE	End Effector
ES	Electrical Strap
ESB	Electrical Strap Bolt
ESBT	Electrical Stap Bolt Torquing tool
FAT	Factory Acceptance Test
FBT	FCB Torquing Tool Base
FCB	Flexible Cartridge Bolt
FDR	Final Design Review
FEM	Finite Element Method
FS	Flow Separator
FSCT	Flow Separator Cutting Tool
FSHT	Flow Separator Handling Tool
FSWT	Flow Separator Welding Tool
FW	First Wall
FWCBT	FW Central Bolt Torquing End Effector
FWESBT	FW ES bolt Bolting Tool
FWG	FW Gripper
FWTB	First Wall Tool Base
GM3S	General Management Specification for Service and Supply
HLCS	High-Level Control System
HLT	Helium Leak testing Tool
HMI	Human-Machine Interface
ICD	Interface Control Document
ICSR	In-Cask Storage Rack
IMK	Inter Modular Keypads
IO	ITER Organization
IPT	In Port Transporter
IS	Interface Sheet
IVDT	In-Vessel Deployment Trolley
IVT	In-Vessel Transporter
JADA	Japan Domestic Agency
LLCS	Low-Level Control System
MC	Monoaxial Connector
MCAMT	Monoaxial Connector Alignment Measurement Tool
MCCT	Monoaxial Connector Cutting Tool
MCPT	Monoaxial Connector Pulling Tool
MCWT	Monoaxial Connector Welding Tool
MTO	Material Take Off
MTPP	Module Tool Pallet Plate
NBDL	Neutral Beam Duct Liner
NBI	Neutral Beam Injection
NDE	Non-Destructive Examination
NTS	Nacelle Tool Storage
OD	Outer Diameter
PAT	Pipe alignment Tool

SUPPLY

PBS	Plant Breakdown Structure
PCR	Project Change Request
PCT	Pipe Cutting Tool
PHS	Passive Holding System
PR	Project Requirements
PRO	Procurement Responsible Officer
PWT	Pipe Welding Tool
QAP	Quality Assurance Program
RD	Reference Documents
RFA	Rail Fixing Arm
RH	Remote Handling
RoX	Return on Experience
SAT	Site Acceptance Test
SB	Shield Block
SBESBT	SB ES bolt Bolting Tool
SBG	SB Gripper
SBTB	Shield Block Tool Base
SDP	System Design Process
SL	Seismic Load
SR	Safety Relevant for nuclear safety
SRD	System Requirements Document
SRO	Start of Research Operation
TB	Tool Base
TBD	To Be Decided
TFU	Tool Fixing Unit
TMNP	Tool Manipulator
TSR	Tool Storage Rack
TSS	Tooling Services Skid
UHS	Umbilical Handling System
UTC	Umbilical Temporary Clamp
VC	Vacuum Cleaner
VFA	Vehicle Fixing Arm
VM / VMNP	Vehicle Manipulator
VT	Viewing Tool
VV	Vacuum Vessel
WPQR	Welding Procedure Qualification Record
WPS	Welding Procedure Specification

2.2 Definitions

Site or ITER Site or IO Site: the construction site and areas under operation. This includes any place IO staff operates on a regular basis if specified by the IO.

SUPPLY

3 Applicable Documents & Codes and standards

3.1 Applicable Documents

In the event of inconsistencies between the specification and the applicable documents, the information in this Technical Specification takes precedence.

Ref	Title	IDM Doc ID	Version
[1]	Blanket First Assembly Tooling Requirements	2F6UJT	2.0
[2]	FW & SB main geometry for RH	CANQ4W	3.1
[3]	Blanket modules dimensions and weight	35ZJNQ	TBC
[4]	CAD model of Temporary FW	DET-03305-W	
[5]	CAD model of SB	DET-03305-X	
[6]	CAD model of SB15ND series	DET-08890	
[7]	CAD model of SB14ND series and SB16NB series	DET-08054-A	
[8]	CAD model of Tool Changer	DET-03305-U	
[9]	CAD model of Storage Box	shared on owncloud	
[10]	2D: Gripping hole and ESB wrench torque reaction interface of TFW	TBD	
[11]	List of SB GAD Drawings	CKA4A3	1.0
[12]	PA CN for PA 1.6.P1B.CN.01 for SB18 row unified water connector dimensions	ATWFX4	n/a
[13]	2D: Electrical strap interface to SB	UG4FBK	1.0
[14]	Electrical strap: BKT_ES_14LAYERS_SB	DRW Nr: 028123	--J
[15]	2D: Flexible interface to SB	UGC3KZ	1.0
[16]	FCB Inboard: BKT_FC_IB_BEFORE_CUSTO	DRW Nr: 023426	--E
[17]	FCB Outboard: BKT_FC_IB_BEFORE_CUSTO	DRW Nr: 037672	--B
[18]	2D: SB insert	UGCBHL	1.0
[19]	Coaxial and monoaxial: BKT_MABA_HYDRAULIC_CONNECTION	DRW Nr: 025795	--E
[20]	2D: Temporary FW	TBD	
[21]	FW central bolt: BKT_FW_CENTRAL_BOLT	DRW Nr: 055948	--E
[22]	Cap system:	DRW Nr: 057740 DRW Nr: 074421	--A ---
[23]	2D: Passive Holding System (PHS)	TBD	
[24]	Selection and locational specification of cameras.	TBD	
[25]	Interface information of Zero G Arm	TBD	

SUPPLY

[26]	Interface information of Nacelle	TBD	
[27]	2D: BKT_MODULE_15_S03 (15ND series)	DRW Nr:062819	--A

Notes:
[21] – Drawing version –E under review, but applicable
[22] - Drawing 074421 is under review, but applicable.
[27] – Drawing version –A under review but applicable

3.2 Reference documents

Reference documents are not required to be compliant with but can be referenced for information.

Ref	Title	Doc ID	Version
[R1]	Interface Sheet of SB	33TYJV	5.1
[R2]	Interface Sheet of FW	33PH3Y	6.3
[R3]	FE analysis of SB#09 during flexible cartridge bolt tightening for first assembly	CDTHED	1.0
[R4]	Test report – FW Central bolt tightening with reconfigurable test bench	8LZ3PM	1.0
[R5]	Test report –The reaction force measurement of FW hydraulic pipe cap cutting	YQB5Q7	1.0
[R6]	Study on design options of FW tool base	2D6VG6	1.0
[R7]	Recommendation on the 15NDL handling interface modification	7SQ4Z8	1.0
[R8]	Test report – Welding Trials of TIG welding tool prototype for FW hydraulic pipes and caps	5ZVHWD	1.0
[R9]	11_-_Tooling_Description (presentation at PT Workshop)	4T8QNV	1.0
[R10]	TKM COMPLEX : LEVEL_L1, EQUIPMENT ARRANGEMENT DRAWINGS	TU482P	1.5
[R11]	Maintenance needs for permanently installed sockets in B11, B14 and B74	66V9NP	2.1
[R12]	D2-2: Central Bolt Compliant Wrench assembly	TMT6P4	3.1
[R13]	RH Controller Interface Protocol	THQSYN	1.1
[R14]	RHSL Definition using XText	PAW2QX	1.1
[R15]	Structural analysis report of the 15NDL handling interface	7T3MAH	1.0
[R16]	IO Tool Changer Preliminary Connector Configuration assessment	94QMP6	1.0
[R17]	Test report of Central bolt tightening tool	XZM8JP	1.0

SUPPLY

3.3 Applicable Codes and Standards

Laws and Regulations

- Grippers (FW, SB, 15ND) are subject to French *Machinery Regulation 2023/1230/EU* or "Lifting devices" as exchangeable equipment for the Blanket Assembly Transporter. Manufacturer of the grippers are required to comply with below requirements.
- A safety factor of 1.25 shall be applied on the payload for the structural analysis as part of the design justification.
- A static load test shall be conducted by applying a load of 1.1 times the payload to the gripper as part of the FAT in two positions: a horizontal orientation and a downward direction and then submit the test records. Note that, if the weight is simulated, there is no necessity to mimic the FW shape in the load test. Equipment shall withstand the load test without permanent deformation or patent defect.
- Develop operation and maintenance manuals specifying safe handling procedures, inspection and testing procedure, and precautions for use.
- Provide a conformity declaration or certification to confirm that the product adheres to the design specifications.

- Initial assembly tools and end effectors shall comply with following directives, as "interchangeable equipment".
  - *Electromagnetic Compatibility (EMC) Directive 2014/30/EU*
  - *Low voltage Directive (LVD) 2014/35/EU*
  - *Machinery Regulation 2023/1230/EU*
  - *RoHS Directive 2011/65/EU*
- *Although REACH is not a direct requirement for CE marking, IO is responsible for meeting REACH obligations as the importer. Therefore, if the delivered items (including packaging materials) contain any SVHC at or above 0.1 wt%, IO must be notified. Such notification shall be provided in written form.*

Codes and Standards

Examples of permissible design standards are listed below. However, specifying a design standard is not mandatory as long as compliance with the Machinery Directive is ensured. If a different standard is to be applied, it must be proposed to IO for approval.

- *EN 13001-1/+A1:2009 Cranes - General design - Part 1: General Principles and Requirements*
- *EN 13001-2:2011 Cranes - General design - Part 2: Load actions*
- *EN 13001-3-1/+A1:2013 Cranes - General design - Part 3-1: limit states and proof of competence of steel structures*
- *EN 13001-3-3 Cranes - General design - Part 3-3: Limit states and proof of competence of wheel/rail contacts.*

The ITER design handbooks that shall be applied to the design are as follows (The specific parts to which it will be applied are described in Section 4.2.):

- *Electrical Design Handbook (EDH) [CA09], [CA11], [CA10], [CA36], [CA37]*
- *Remote Handling Control System Design Handbook [CA20]. Note that, the following section is excluded.*
  - *2.2 Standard parts*
  - *2.5 RH Control Room*
  - *2.6 Cubicle Rooms, Cabling Connectors*
  - *2.10 Operation Viewpoints*
  - *6 Hazard identification and risk assessment*

The welder should be qualified to the relevant standards (e.g., ISO 9606 series or JIS Z 3811). The welder's certificate, welding procedure, and welding records shall be submitted. If the welder is certified independently of the standards, the decision shall be made in consultation with IO.

The minimum extent of weld inspection shall be as follows: For the Grippers (part of lifting device), 100% PT inspection on practically inspectable areas shall be the performed, while for other components, 10% PT inspection shall be applied. Additionally, visual inspections shall also be conducted. Volumetric NDT is not required.

Applicable standards can be refined or changed as the design progresses with proper justification for the change.

4 Scope of Work

This section defines the specific scope of work, in addition to the requirement list as defined in [1]. First, an overview of the Blanket Module assembly is provided, followed by the necessary tasks to be performed and the preliminary designs of the Tools & End Effectors that serve as their basis.

The scope of supply shall consist of the following steps for all End Effectors and Tools identified by IO in this document:

1. Final Design based on the Preliminary Designs supplied by IO
2. Develop control system for Blanket Assembly Tooling
3. Production of SRO End Effectors and Tools prototypes (First Batch of Tooling)
    a. Note that skipping the prototype is an option.
4. Production of pre-SRO End Effectors and Tools (Tooling Production Units for pre-SRO)
5. Factory Acceptance Tests
6. Site Acceptance Tests

JADA will manufacture the tools and end effectors for Blanket assembly, provide manuals, and perform functional testing, but the actual Blanket assembly operations and preparation, including creation of WPSs for real blanket piping welding, are not within JADA’s scope.

4.1 Overview of Blanket Modules Assembly

Blanket Modules (BM) consist of Shield Blocks (SB) and First Wall (FW) units (see Figure 1). For pre-SRO operations, Temporary First Wall (TFW) units will be used, which will not have active cooling, meaning there will be no pipe joint to be made between SBs and TFWs. Shield Blocks are connected to the VV via Flexible Cartridges (for positioning) and captive Flexible Cartridge Bolts (for fixing) (see Figure 2). TFWs are connected to the SB via a Central Bolt (CB) (see Figure 3) and pads for positioning.

SUPPLY

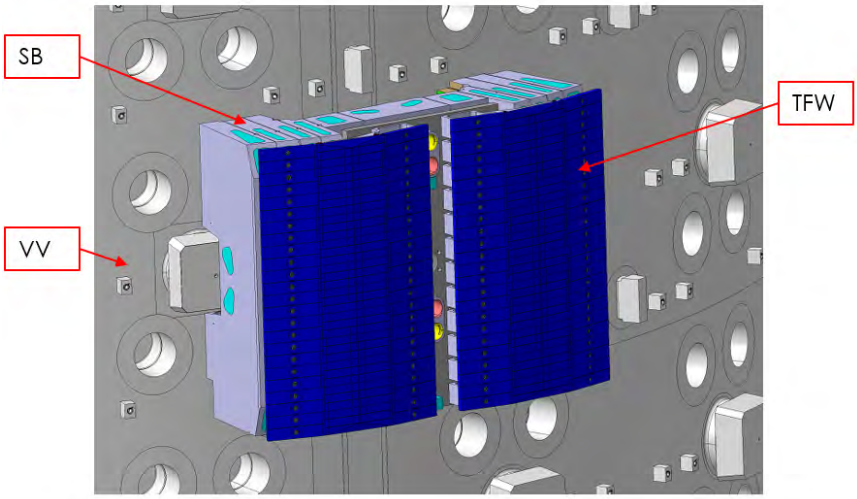

Figure 1 Blanket Module attached to the VV

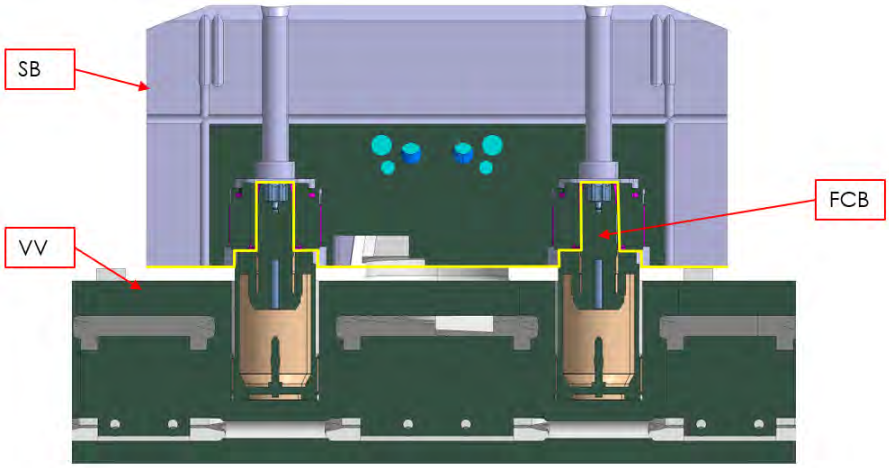

Figure 2 Flexible Cartridge interface between VV and SB (yellow outline is the border between SB and VV components)

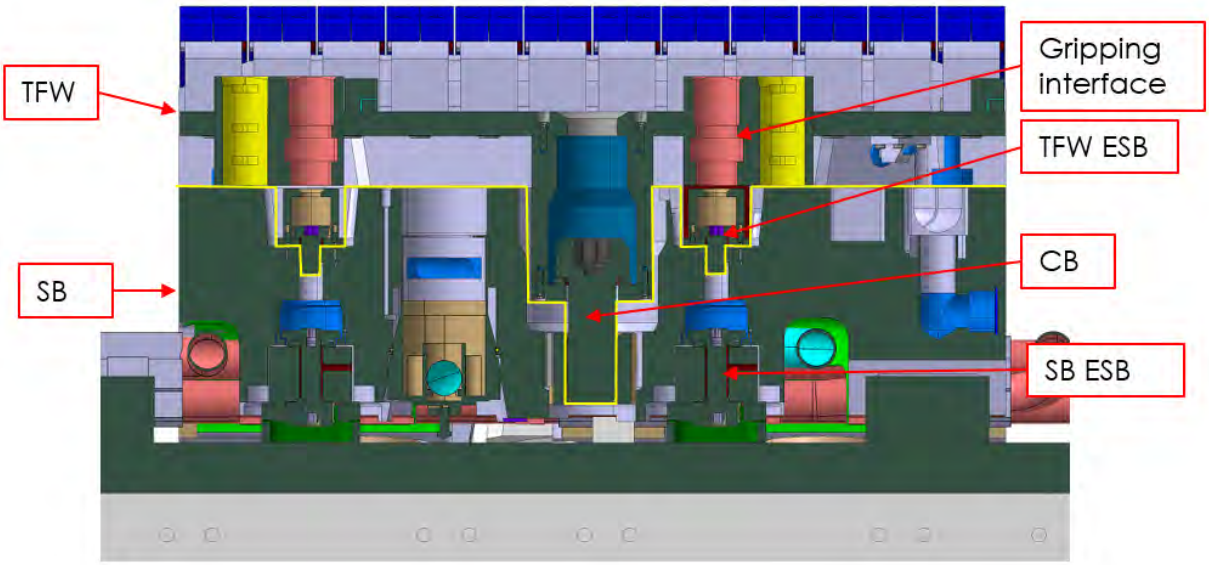

Figure 3 Central Bolt interface between SB and TFW (yellow line is the border between TFW and SB)

SUPPLY

SBs and TFWs will be transferred to their position in the vessel by the Blanket Assembly Transporter (BAT), using dedicated End Effectors called Shield Block Gripper (SBG) and First Wall Gripper (FWG).

After the SBs are temporarily fixed in position by the BAT, FCBs and Electrical Strap Bolts (ESB) must be tightened to predefined torque levels. FCB torquing will be performed by a specific FCB Tightening Tool Base (FBT), which is an End Effector to be handled and fixed to the front of the SB by the BAT. ESB tightening will be done by a the Electrical Strap Bolt Torquing Tool (ESBT) using the front pockets of the SB to react the torque applied. Pictures of the concept for these EEs and Tools will be shown later in dedicated sections.

Blanket manifolds, supplying cooling water to BMs, are routed in the space between VV and SB. Two ways have been developed to connect manifolds to BMs.

The first solution is where the inlet and outlet manifolds meet in a Coaxial Connector (CC) (see Figure 5), which is welded to the SB pipe stub at the bottom of the SB. CC is used for most of the SBs. The tools used at this joint are:

- CCWT: Coaxial Connector Welding Tool
- CCCT: Coaxial Connector Cutting Tool

Both should weigh less than 40 kg (similar to all Tools), handled by the zero G arm on the IVTC Nacelle and to be fixed to the Tool Fixing Unit (TFU) of a Shield Block Pulling & Welding Tool Base (SBTB).

When the Tool axis is horizontal, the zero G arm should, ideally, be aligned so that there is no moment load that the operator has to compensate. However, there are situations, when this is impossible, due to ergonomic reasons or space constraints. Tools and their gripping features (for the zero G arm and for handling) should be designed so that an operator can compensate the moment load generated from the CoG being at an offset from the last swivel joint of the zero G arm.

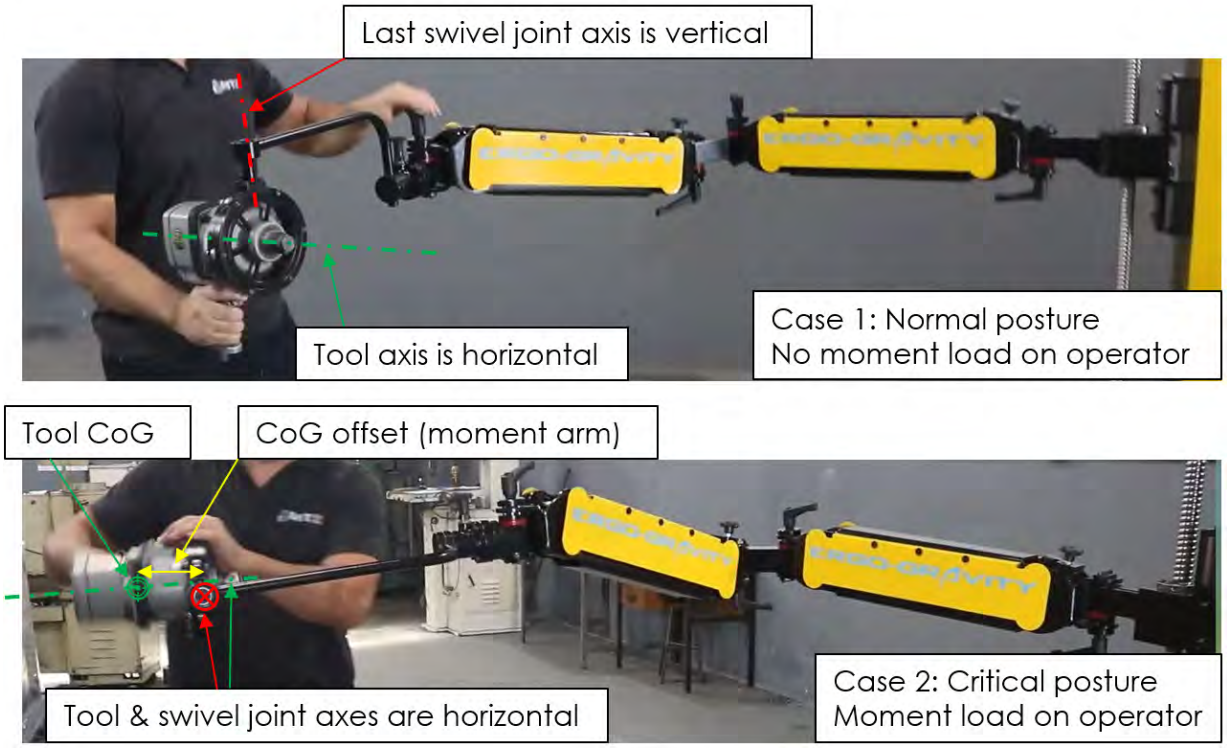

Figure 4 Explanatory figure of moment load on operator (video from https://www.cyborg-arms.com/ (accessed on 24/01/2025). Moment load to compensate is equal to (tool weight x CoG offset)

SUPPLY

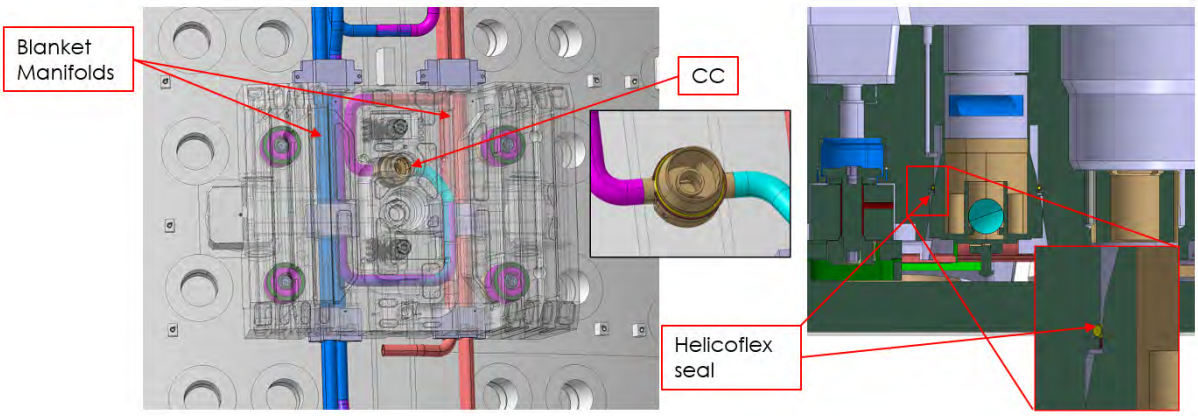

Figure 5 Coaxial Connector as interface between SB cooling channels and Blanket Manifolds

The second solution consists of 2 Monoaxial Connectors (MC) (see Figure 6) to be welded to the bottom of the SB, instead of a single CC. In this case, one of the two SB access holes must be capped off. MCs have to be welded to SB pipe stubs, whereas a butt weld should join the EC to a lip on the SB. All SBs in rows 8 and 18 and three 15ND blocks (15ND, 15NDA, 15NDB) have MC connectors. The tools used for this are:

- MCPT: Monoaxial Connector Pulling Tool
- MCAMT: Monoaxial Connector Alignment Measurement Tool
- MCWT: Monoaxial Connector Welding Tool
- MCCT: Monoaxial Connector Cutting Tool
- ECHT: End Cap Handling Tool
- ECWT: End Cap Welding Tool
- ECCT: End Cap Cutting Tool

All of these are light tools and should weigh less than 40kg. They are to be handled with the use of a load compensation device. Except for ECHT, all are to be fixed to the TFU of SBTB. ECHT is a very simple tool for picking and positioning the EC.

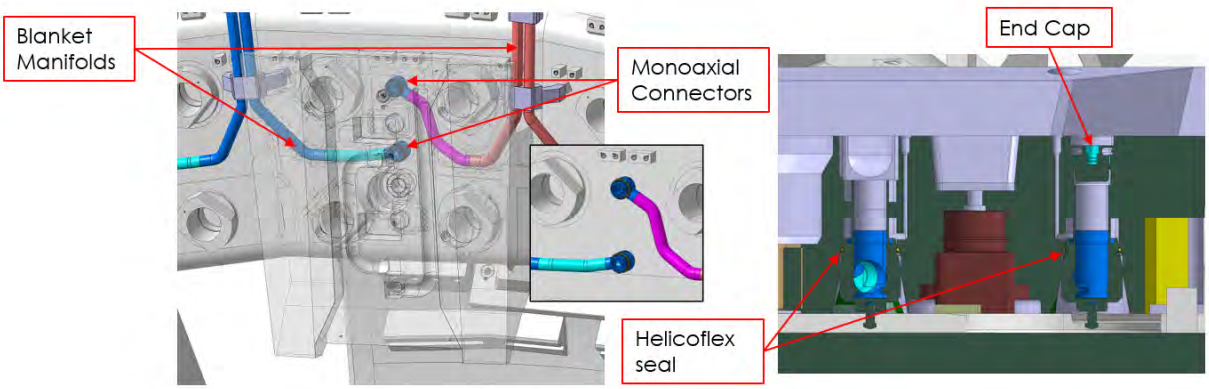

Figure 6 Monoaxial Connector as interface between SB cooling channels and Blanket Manifolds

The remaining parts of the BM cooling system are out of scope for this work, because neither the SB nor the TFW will have active cooling at the pre-SRO phase. Regardless of no cooling, CC and MC connections must be welded during First Assembly because correcting a failed weld at this phase bears a lot less risk than at later assembly phases.

15ND modules are irregular Shield Block units at the entry of the 3 NB ports (see Figure 7). To install them, a specific Gripper (15NDG) will have to be developed and a Tool Base (15NDTB) to fix and align the abovementioned tools for welding MCs and ECs.

SUPPLY

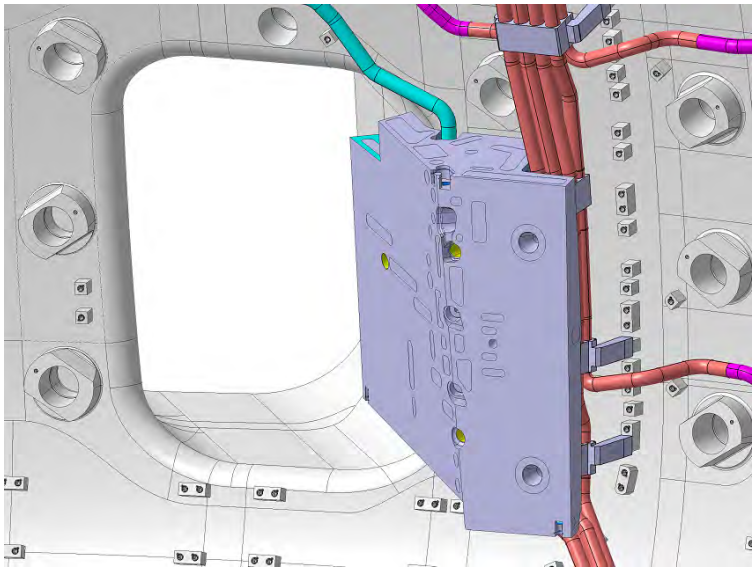

Figure 7 15ND Shield Block in Sector 3

When all SB welding processes are done and FCB and ES bolts are torqued, the FWG (via BAT) installs the TFW modules, applying a temporary torque on the CB. After this, a First Wall Central Bolt Tightening End Effector (FWCBT) will torque the CB to the predefined level. As a last step, the ESBT tool is to be used again, to tighten the ESBs of the TFW to the same torque level as for the SBs.

A Viewing Tool (VT) should be used by an operator before and after each cutting or welding operation to inspect the pipe joints visually.

When a Tool is being used, it is important to assess, which other Tools will be needed in subsequent operations. Also, there are cases, where the Tools are used in combination to complete an operation. For example, MCAMT and MCWT are always used together MCWT following MCAMT.

These Tools, which are not being used, but will be needed soon, should be stored in-vessel for quicker and easier tool replacement. For this, a Tool Storage Rack (TSR) and a Nacelle Tool Storage (NTS) shall be developed.

TSR is an End Effector, connected to one of the SBs or TFWs in row#18 and it should be able to hold at least 4 Tools.

NTS is a structure that should be fixed to the IVTC Nacelle basket frame, and it should be able to hold 2 Tools. The Tools stored in the NTS are directly accessible to the Operator, who can use the zero G arm (also fixed to the Nacelle basket) to pull out or depose a Tool.

See Table 1 for a complete list of End Effectors, Tools and Supporting Equipment to be developed in the context of Shield Block and Temporary First Wall First Assembly.

In Table 5, the EEs and Tools are listed in the order of usage. It is also shown, which tools are used together with which End Effectors. All End Effectors have Tool Changer interfaces, but not all of them remain connected to the BAT. Tool Bases, such as SBTB and 15NDTB are placed into position on the target SB (or 15ND) by the BAT, after which they are fixed automatically to the target Component. Then, the Tool Changer Master Side disconnects from the Tool Side and the BAT leaves the Tool Base. After the disconnection from the BAT, services shall be fed via the TSS to the Tool Bases via separate cables, connected manually by an operator from one of the nearby Nacelles.

SUPPLY

End Effectors	Tools	Auxiliary
Shield Block Gripper (SBG)	Electrical Strap Bolt Torquing Tool (ESBT)	Blanket Tooling Supporting Equipment
Flexible Cartridge Bolt Torquing Tool Base (FBT)	Viewing Tool (VT)	Tooling Services Skid (TSS)
Shield Block Pulling and Welding Tool Base (SBTB)	Coaxial Connector Welding Tool (CCWT)	Umbilical Handling System (UHS)
15ND Gripper (15NDG)	Coaxial Connector Cutting Tool (CCCT)	Umbilical Temporary Clamp (UTC)
15ND Tool Base (15NDTB)	Monoaxial Connector Alignment Measurement Tool (MCAMT)	In-vessel Tool Storage
First Wall Gripper (FWG)	Monoaxial Connector Pulling Tool (MCPT)	Tool Storage Rack (TSR)
First Wall Central Bolt Torquing End Effector (FWCBT)	Monoaxial Connector Welding Tool (MCWT)	Nacelle Tool Storage (NTS)
	Monoaxial Connector Cutting Tool (MCCT)	
	End Cap Handling Tool (ECHT)	
	End Cap Welding Tool (ECWT)	
	End Cap Cutting Tool (ECCT)	

Table 1 End Effectors and Tools included in the scope of First Assembly of SB and TFW modules

End Effectors	Anticipated number of variants
Shield Block Gripper (SBG)	3
Flexible Cartridge Bolt Torquing Tool Base (FBT)	1
Shield Block Pulling and Welding Tool Base (SBTB)	5-10 (modular design)
15ND Gripper (15NDG)	1
15ND Tool Base (15NDTB)	1
First Wall Gripper (FWG)	1
First Wall Central Bolt Torquing End Effector (FWCBT)	1
Total number of End Effectors to develop	**13-18**

Table 2 Anticipated total number of End Effectors to develop (number of production units will differ)

SUPPLY

Tools	Anticipated number of variants
Electrical Strap Bolt Torquing Tool (ESBT)	1
Viewing Tool (VT)	1
Coaxial Connector Welding Tool (CCWT)	1
Coaxial Connector Cutting Tool (CCCT)	1
Monoaxial Connector Alignment Measurement Tool (MCAMT)	1
Monoaxial Connector Pulling Tool (MCPT)	1
Monoaxial Connector Welding Tool (MCWT)	1
Monoaxial Connector Cutting Tool (MCCT)	1
End Cap Handling Tool (ECHT)	1
End Cap Welding Tool (ECWT)	1
End Cap Cutting Tool (ECCT)	1
Total number of Tools to develop	**11**

Table 3 Anticipated total number of Tools to develop (number of production units will differ)

End Effectors	Anticipated number of variants
Blanket Tooling Supporting Equipment	
Tooling Services Skid (TSS)	1
Umbilical Handling System (UHS)	1
Umbilical Temporary Clamp (UTC)	1
In-vessel Tool Storage	
Tool Storage Rack (TSR)	2
Nacelle Tool Storage (NTS)	1
Total number of Auxiliary Components to develop	**6**

Table 4 Anticipated total number of Auxiliary Components to develop (number of production units will differ)

SUPPLY

Initial Assembly EEs and Tools in the order of usage		
End Effector	**Tool**	**Supporting equipment**
SBG	-	BAT
FBT	-	BTSE
-	ESBT	n/a - manual
SBTB	CCWT	BTSE
	CCCT	
	MCPT	
	MCAMT	
	MCWT	
	MCCT	
	ECHT	
	ECWT	
	ECCT	
15NDG	-	BAT
15NDTB	MCPT	BTSE
	MCAMT	
	MCWT	
	MCCT	
	ECHT	
	ECWT	
	ECCT	
FWG	-	BAT
FWCBT	-	BAT

Table 5 EEs and Tools in the order of usage during First Assembly

In addition to the End Effectors and Tools, a Blanket Tooling Supporting Equipment (BTSE) system shall be developed, composed of a Tooling Services Skid (TSS) located in the Port Cell, an Umbilical Handling System (UHS) located in the Equatorial Port and several in-vessel Umbilical Temporary Clamps (UTC) to provide services to said EEs and Tools (see section 4.2.19)

The development of End Effectors shall include the design and supply of custom mounts (see section 4.2.21) that can be used to connect the EEs to the Storage Box in transfer configuration.

4.2 Final design of End Effectors and Tools

JADA and their Contractors shall conduct the final design for all the EEs and Tools in Table 5 for IO approval. This scope of work shall include:

- Final design based on the preliminary designs provided by IO in this document and the requirements listed in Ref. [1].

SUPPLY

- Identification of number of variants for each EE and Tool to accommodate BM variants.
- Identification of number of production units for each EE and Tool variant in close collaboration with IO.
- Identification of number of spare units for each EE and Tool variant in close collaboration with IO.
- Confirmation of compliance with the requirements specified in Ref. [1], with the creation of the Design Compliance Matrix (DCM) as an example of verification means. The DCM needs to be completed during/after the completion of design validation tests, FAT and SAT.
- Creation of document deliverables for design approval (Design description, CAD models and drawings, detailed list of document deliverables is specified in 7.1.2)

First Batch items shall be used as Final Production Units if they performed well at FAT/SAT and are not damaged.

The following sections present preliminary designs of EEs and Tools (and the auxiliary equipment) to be used for Blanket First Assembly. They give an overview of the design, and they should be read together with Ref. [1], which lists the detailed general and functional requirements.

4.2.1 Shield Block Gripper

The SBG is an End Effector to grasp and transport the SB.

Design description

The main functions and corresponding sub-systems of the SBG are as follows:

- **Central Clamping Mechanism** to securely grasp the M64 thread of the SB.
- **ESB Wrench Units** to tighten ESB consisting of:
  - A motorized extension mechanism to insert the wrench into the ESB socket after the SB is placed on the Flexible Cartridges.
  - A motorized translation mechanism to reach different ESB positions
  - A motorized wrench rotation mechanism to apply torque to the ESB
  - Maraging steel wrenches with high yield strength to apply torque.
- **Base Plate (or Gripper Frame)** as structural housing of the device and equipped with
  - Tool Changer Tool Side for connection to the BAT General EE.
  - Interface feature for connection the SBG to SB.
  - Two cameras for robot vision for positioning the SBG.
  - Embedded controller

The main function of the SBG is to be able to carry Shield Blocks to their destination inside the tokamak and tighten the ES Bolts to temporary torque level. The SBG performs temporary fixing operation of the ESB to the parking thread (M72) on the SB side (so-called ‘re-parking’) in order to prevent the ESB from becoming free while SB handling. The concept of compliance mechanism on the wrench to achieve this is provided by the IO [R12].

The SBG may have multiple variations, but all the variants should have the functionality to: move the ES wrenches towards and away from the Central Barrel; and to raise and lower them

in order to reach the ESB socket through the access hole of the SB. This second function is necessary, because the wrenches need to be retracted whilst the SB is picked up and being moved inside the vessel. The wrenches should only be extended when the SB is positioned safely on the Flexible Cartridges.

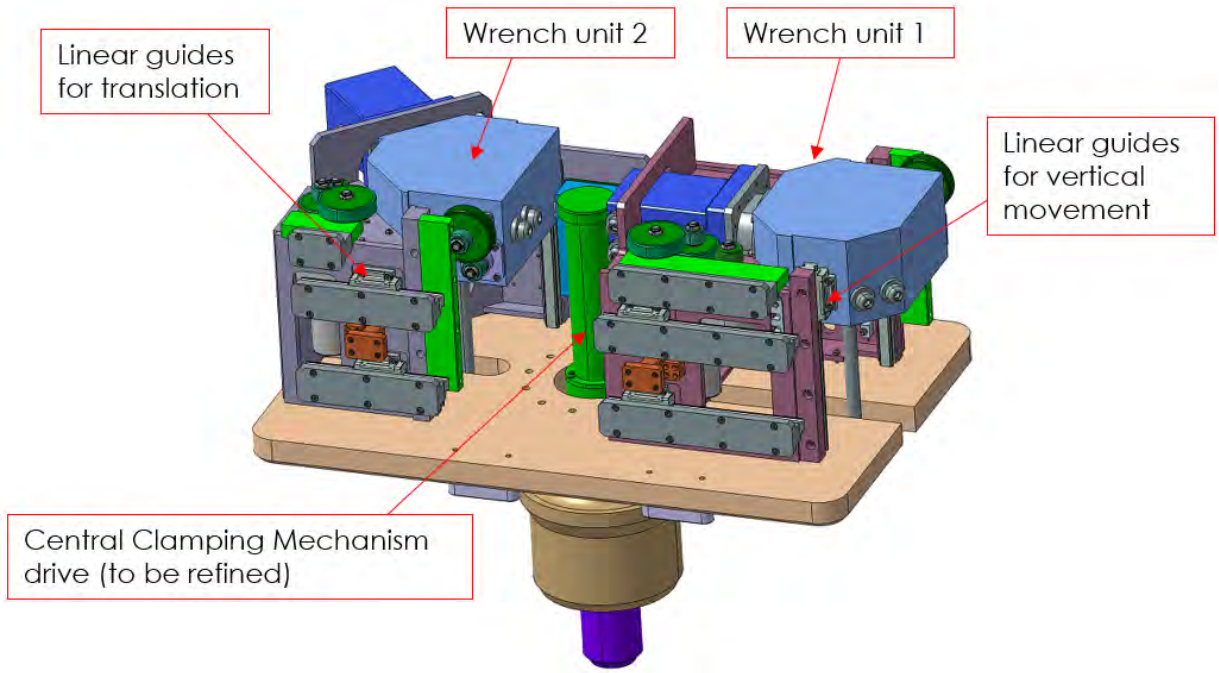

Figure 8 Overview of the main functions of the Shield Block Gripper

SB installation using the SBG (and the BAT arm) is show in Figure 9 below.

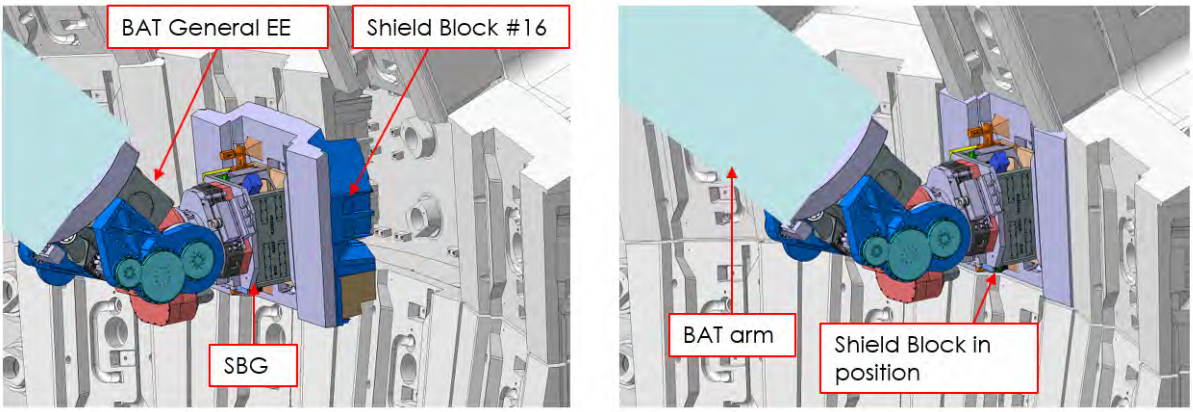

Figure 9 Shield Block installation concept using the SBG

Process and Interface Description

The interfaces of the SBG are similar to the interfaces between TFW and SB. After delivering the SB into position within the VV, the SBG should tighten the ESBs to a temporary torque level.

SUPPLY

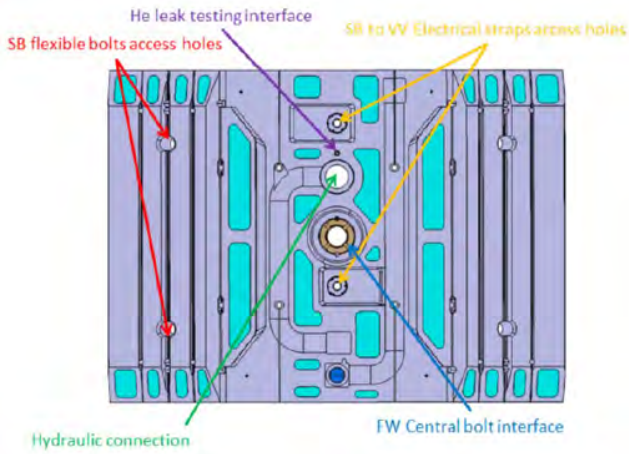

Figure 10 Overview of the front access holes of the SB

From the access holes shown in Figure 10, the SBG will make use of the Central Bolt interface (blue) and ESB access holes (yellow). After the SB is positioned properly on the Flexible Cartridges (see Figure 2), the SBG should extend its wrenches through the SB access hole to reach the ESB sockets. As can be seen in Figure 12, the SB access hole is a M24 female thread (with a minor diameter of 20.75 mm), which is the thread used for connecting the TFW Electrical Strap to the SB, using a similar Electrical Strap Bolt. Thus, it is important that the SBG wrench should not damage these threads. Wrench body should be cylindrical.

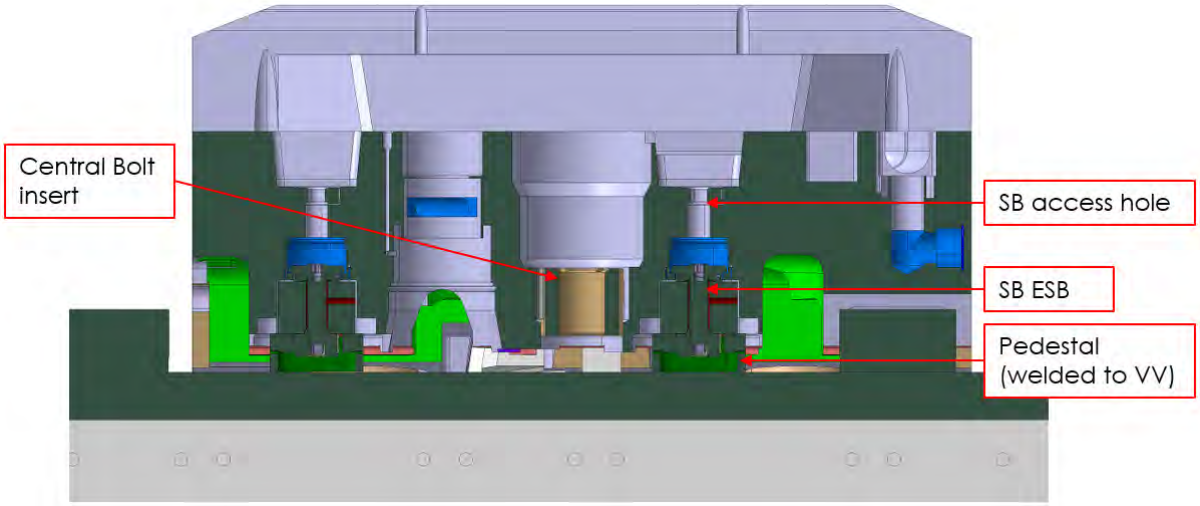

Figure 11 Cross-section of the SB at the ES position

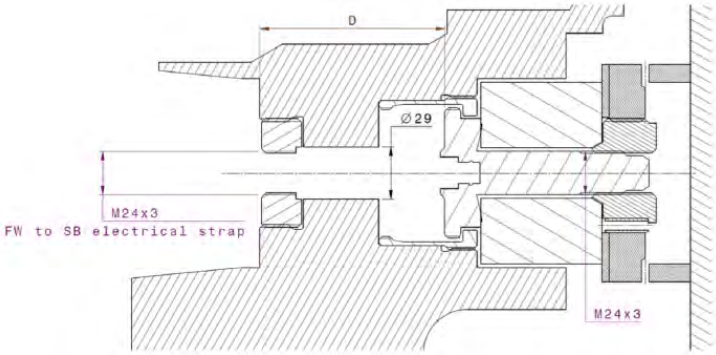

Figure 12 SB ESB access hole

The wrenches of the SBG need to move to and away from the central barrel, to be able to grab and fix as many Shield Blocks as possible.

SUPPLY

A list is provided in Table 6 for the position of all Electrical Staps for all SBs. This table is not a complete list of all ESB depths. There are cases, where the two ESBs are at two different depths with respect to the SB front face. So, the models of all SB variants should be checked to acquire the full list of ESB depths.

In the table below, the 15ND Shield Blocks are also listed, but they will have separate 15ND Grippers. It is clear from the table that the vertical movement range of the SBG wrenches is quite large. Also, the ES depth with respect to the front SB surface varies a lot (e.g. difference in depth between row 8 and row 15 is 203.3 mm). Due to these large variations, it is not expected that one SBG design will be sufficient to cover all SB rows. However, the number of SBG variants should be kept reasonably low. Also, SBGs should be able to operate in an upside-down configuration (rotated by 180 degrees around the central barrel by the joints movement of BAT) in order to have more flexibility (e.g. row 14 and 15 should be handled by the same SBG design, only in a flipped orientation)

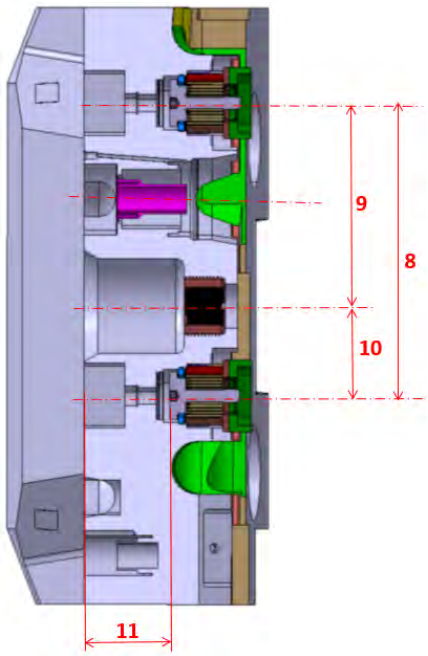

SB	Distance between ES	Distance central bolt ES **UP**	Distance central bolt ES **DOWN**	Distance from SB surface to ES bolt head
	8	**9**	**10**	**11**
1	493	342	151	164.9
2	493	342	151	164.9
3	493	342	151	164.9
4	493	342	151	164.9
5	493	342	151	164.9
6	493.3	329.4	163.9	173.9
7	578	428	150	88.7
8	560	410	150	51
9	440	290	150	135.5
10	572	377	195	138
11C	444	150	294	211.2
11ECH	444	150	294	211.2
11S	579	205	374	218.7
12	449	153	296	219.9
13	456	163	293	212.6
14	535	150	385	251
15	546	396	150	254.3
16	575	320	255	195.6
17	492	339	153	208.6
18	519.5	179.5	340	122.7
14 NB	535	150	385	183.4
14 NC(V)	570	190	380	253.3
14 ND(V)	460.6	310.6	150	233.1
14 NDL	460.6	310.6	150	177.14
14 NE	X	X	X	214.7
15 NB	530	360	170	189.6
15 NC(V)	X	X	X	257.9
15 ND				367
15 NDL				367
15 NDV				367
15 NE	X	X	X	230.7
15 ST	546	396	150	196.3
16 ST	575	320	255	136.6
18 ANU	430	280	150	122.7
18 E	430	280	150	122.7

Table 6 ES bolt positions with respect to CB insert [2]

For most of the SBs (incl. all regular ones), the ES and CB positions fall within one straight line. However, there are a few special SB types, for which the ES bolts are at an offset. The SBG for these SBs will need to have offset mounting positions for the wrenches or they will have to be new variants altogether.

SUPPLY

Shield Blocks with non aligned Electrical straps (see picture below)					
			15 NC(V)	15 NE	14 NE
Shield Blocks	Distance central bolt ES **UP**	Y	146	146	145
		Z	320.4	83.3	366.4
	Distance central bolt ES **DOWN**	Y	146	146	145
		Z	279.6	348.3	140.6

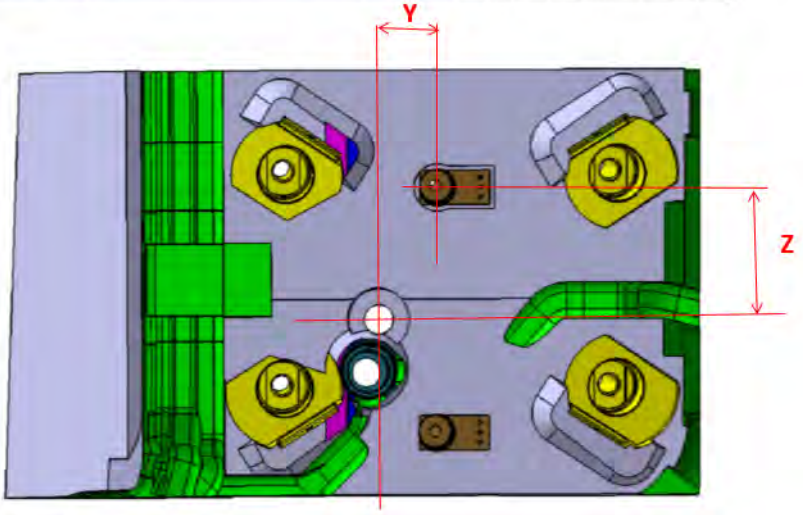

Table 7 Shield Blocks with ES bolt position offset [2]

In the following paragraphs the IO proposal is presented for the concept of the SBG. It shall be noted that the concept follows the technical requirements presented in Ref. [1], but it only shows the main functions and interfaces, which shall be elaborated further.

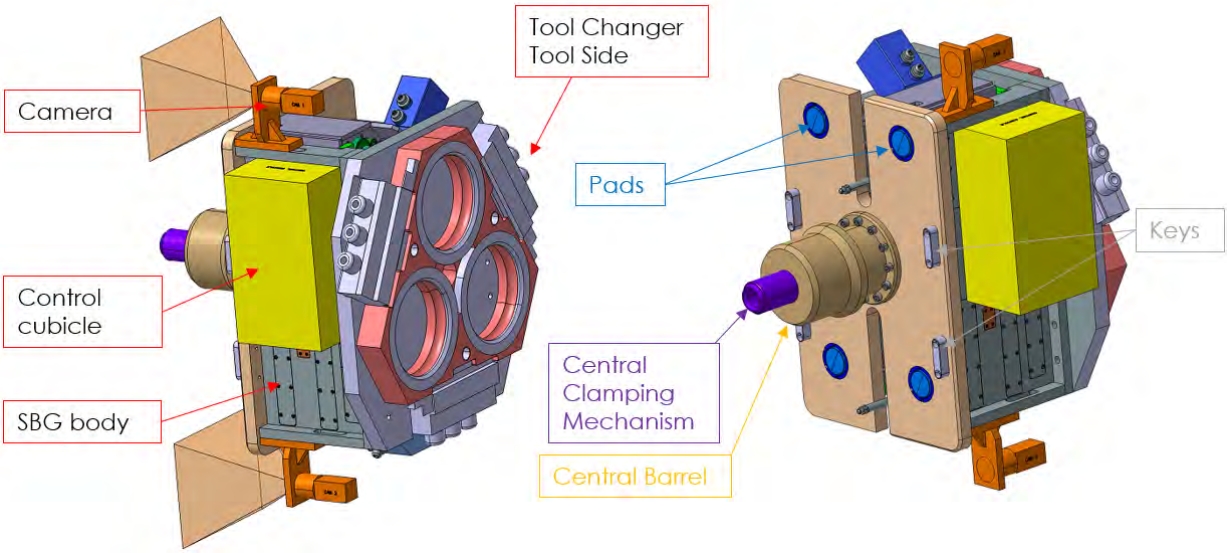

Figure 13 SBG main components and interfaces with SB

4.2.1.1 Interfaces with the Shield Block

Interfaces with the SB (similar for all EEs connected to SB) (colours according to Figure 13):

1. Keys for alignment and to constrain rotation. These interface with the FW pipe grooves of the SB.
2. Pressing pads to provide rigid connection
3. Central Barrel interface.
4. Captive Clamping Mechanism with clamping and pulling mechanism

SUPPLY

The figure below further explains the interfaces between SBG (and all SB Tool Bases) and Shield Block front features.

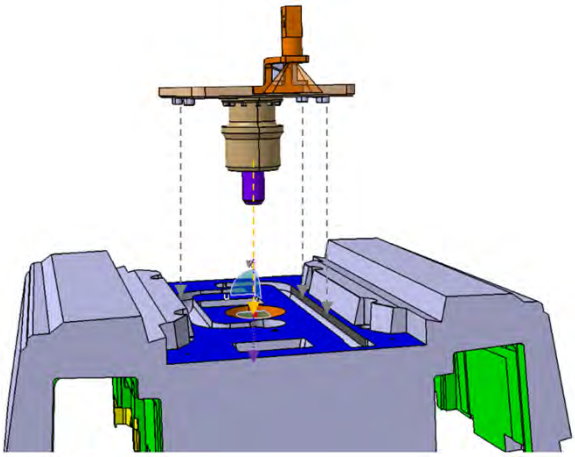

Figure 14 Interfaces of SB End Effectors (interface directions: w: Central Barrel axis; u,v: coordinate system in the blue plane of the SB above, with v parallel to the FW cooling channel grooves.

Constraints (colours according to Figure 13 and Figure 14):

- Keys are preventing rotation (around "w" axis)
- Pressing pads and Captive Central Clamping Mechanism are blocking vertical motion (translation in "w" direction and rotation around "u" and "v)
- Central Barrel blocks translation in "u" and "v" direction

4.2.2 Flexible Cartridge Bolt Torquing Tool Base

The FCB Tool Base is an End Effector used to tighten the FCB to a high torque level.

Design description

The main functions and corresponding sub-systems the FBT are as follows:

- **Wrench positioning arm** to align the wrench with the access hole of the target SB using zero-backlash screw drives with manual operation.
- **Torque application system** integrated to the arm to apply torque on the FB consists of
  - Motor + harmonic drive + torque multiplier
  - Maraging steel wrench with high yield strength to withstand high torques
- **Base Plate** equipped with
  - Tool Changer Tool Side for connection to the BAT General EE.
  - Interface feature for connection the FBT to SB.
  - Two cameras for robot vision for positioning the FBT.
  - Embedded controller
- ***Accessory: FCB bolting tool*** for an operator to perform bolting of the FCB
  - Wrench with handling feature by operator
  - PHS at the tip of the wrench

At the joints of the FBT Wrench positioning arm, zero backlash screw drives are used to align the wrench with the access hole.

The torquing should be done by the combination of a compact motor and a torque multiplier. The wrench used for applying the high torque is made from maraging steel, with very high yield

strength. The wrench head takes the form of the Straight type shown in [R17] Figure 2-4 (1), with a small clearance to permit minor misalignment with the socket. The connection between the torque multiplier and the wrench should be made via a torque transducer, to measure the applied torque directly on the wrench side.

Just like all the other EEs, the FBT should also be equipped with two cameras in the vertical plane.

A GEDORE DVV-100ZRS (gear ratio 1:28.5) torque multiplier (or similar) should be used to produce the required torque:

https://www.gedore.com/en-at/products/torque-tools/torque-multipliers-accessories/torque-multipliers/dvv-60zrs---dvv-130zrs-torque-multiplier-dremoplus-alu-6000-13000-nm---4400-9530-lbfft/dvv-100zrs---2653133 (accessed on 18/10/2024)

This type of multiplier has grease inside without sealing at the input and output shafts. Thus, the GEDORE multipliers should always be contained in a housing with one seal at each opening (input shaft + output shaft).

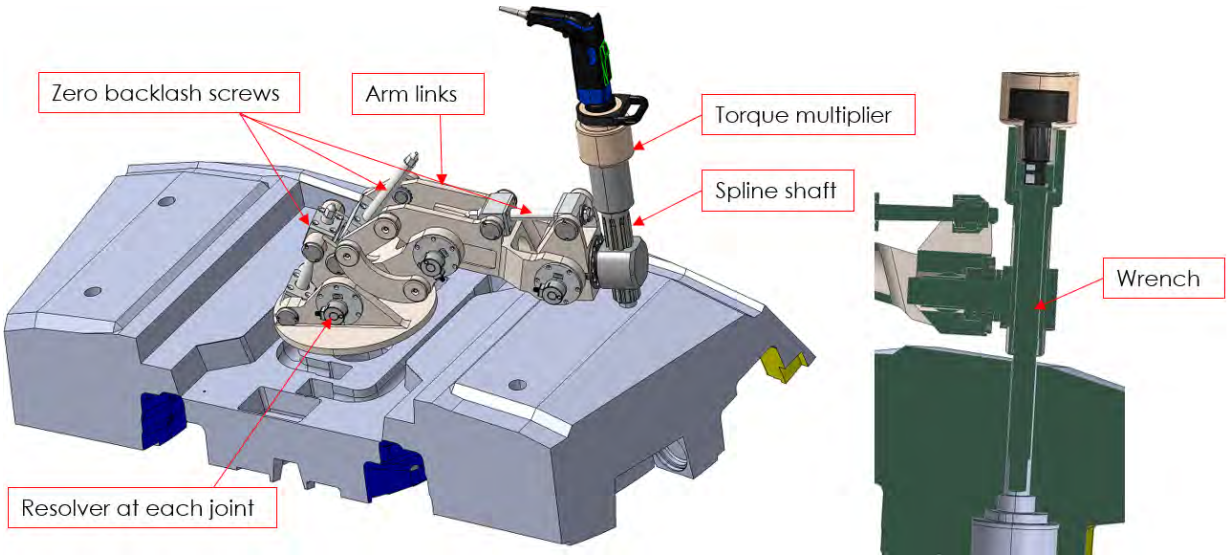

Figure 15 FBT concept design

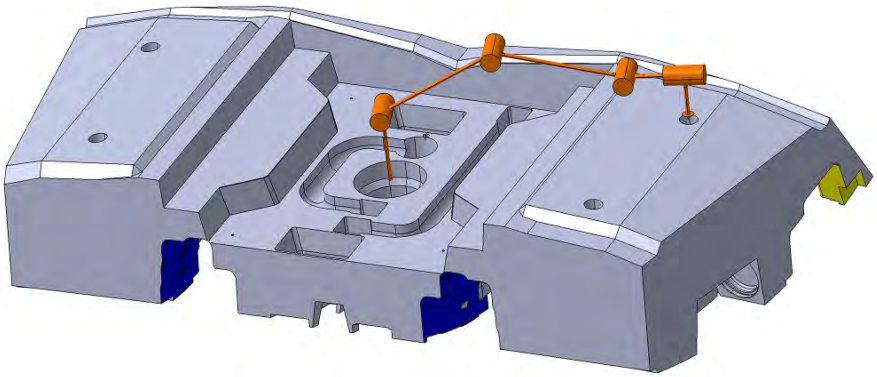

Figure 16 Simplified scheme of the links and joints of the FBT concept

The concept design presented in Figure 15 has a few major points, where it does not meet the requirements yet. The missing points are:

- Develop the concept to show all functions. For example, the rotation DoF around the central hole.

SUPPLY

- It should be assessed if the joint screws can be motorized. If not, a cover should be added to the full FBT, with access only to the screw keys, to prevent accidents and preserve cleanliness.
- Tool Changer Tool Side interface to be added, positioned so that the arm can rotate to reach holes on the opposite side.
- Interface with SB to be added. SBG, SBTB and FBT should share the SB interfaces (see section 4.2.1.1).

Process Description

After the SB is installed on the VV wall and the ESBs are temporary tightened, the next operation is to tighten the FCBs, which are, in their default position, embedded in the Flexible Cartridges and secured by a parking thread (Figure 17). The first step is for an operator to engage the FCB with the threaded insert of the SB. This is a fully manual bolting operation with a long wrench; hand tightness is sufficient (around 50 Nm); no prescribed torque is to be applied.

JADA and their contractor shall develop this simple wrench as an accessory to bolt the FCBs. This wrench should have the proper engagement and PHS at one end and a manual handle at the other end. Its length should be sufficient to reach the deepest FCBs, including the FCB to be bolted during 15ND attachment (see section 4.2.15 and Figure 77 in particular).

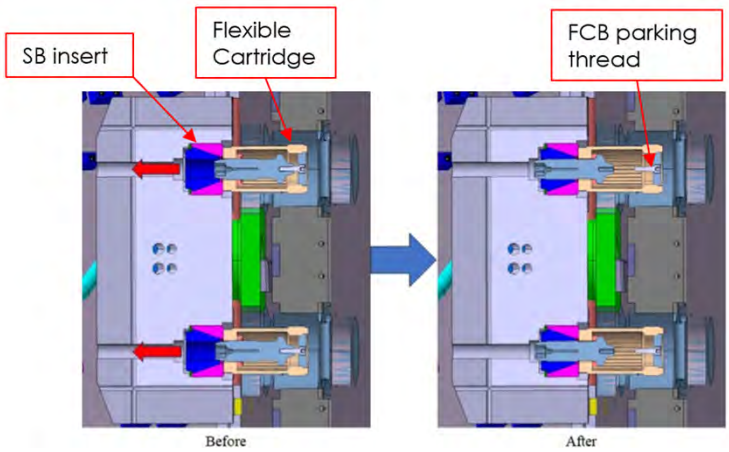

Figure 17 Flexible Cartridge Bolt initial engagement – done manually

The FCBs must be torqued to a high torque level, which cannot be done manually. For this, a dedicated Tool Base (the FBT) shall be used. The FBT shall be transferred into the VV via the IVDT Storage Box and picked up by the BAT for positioning inside the vessel. The FBT should have the interfaces as the SBG to connect to the BAT General EE via the Tool Changer on one side and then to connect to the target SB via the same interfaces presented in 4.2.1.1 on the other side.

The sequence to align with an SB access hole is the following:

1. Theoretical position is set using the screw drives and resolvers. Joint angles are predetermined based on CAD data (using the as-built SB information if necessary).
2. Misalignment is checked with e.g. by a sensor attached to the shaft.
3. Correction of joint angles.

4.2.3 Electrical Strap Bolt Torquing Tool

The Electrical Strap Bolt Torquing Tool is used for tightening the SB ESBs, 15ND ESBs and TFW ESBs (see Figure 18). Therefore, it should have one generic design with possibilities for reconfiguration for the SB or the TFW.

SUPPLY

Design description

The main functions and corresponding sub-systems of the ESBT are as follows:

- **Manual torque application mechanism** consisting of a
  - **Torque multiplier** provides the required torque for ESB tightening.
  - **Maraging steel wrench** with PHS at the wrench tip
  - **Torque input** with 1/2 inch socket
  - **Zero G arm interface**
- **COTS Torque wrench** to apply torque to the input socket
- **Torque reaction feature** which has the following configurations
  - Interface with SB pocket (multiple variants)
  - Interface with TFW RH interface side walls
  - Interface with 15ND monoaxial access holes

For the ESB wrench, the same requirements apply as for the SBG wrenches, they should fit through the M24 insert of the SB (see Figure 12) without damaging the thread.

As the ESBT should be designed to be a manual tool, there is no need to make several versions of it, the wrench could simply be replaced to reach ES Bolts at different depths (see Table 6).

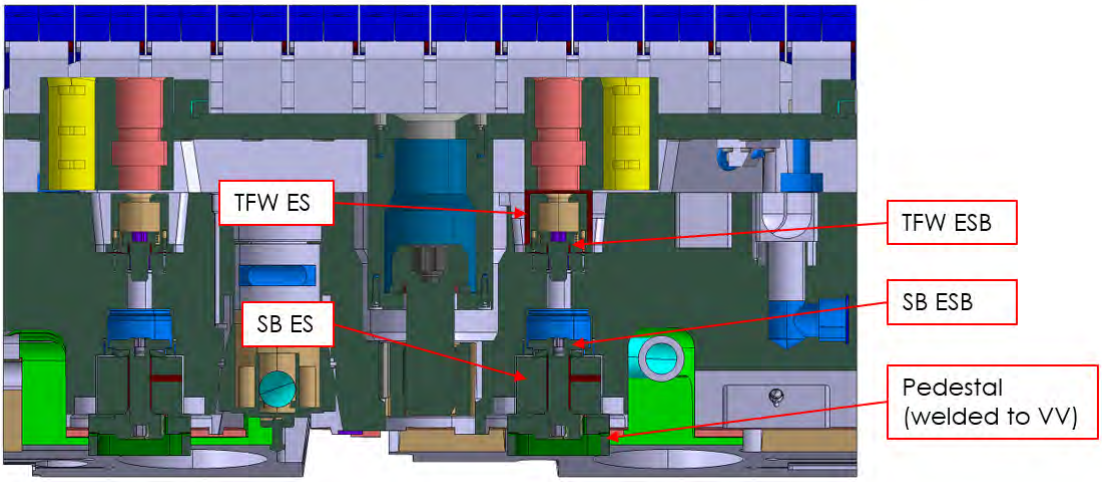

Figure 18 Electrical Strap Bolts of the Shield Blocks and Temporary First Walls

The ESBT should be a fully manual tool without any automatization. It should comprise a calibrated torque wrench attached to a torque multiplier to produce the required torque for tightening the ESBs, and a reaction feature (key) to interface with the pocket of the SB and the RH insert of the TFW. The shape of the TFW ESB access hole and the reaction feature is common across all variants

SUPPLY

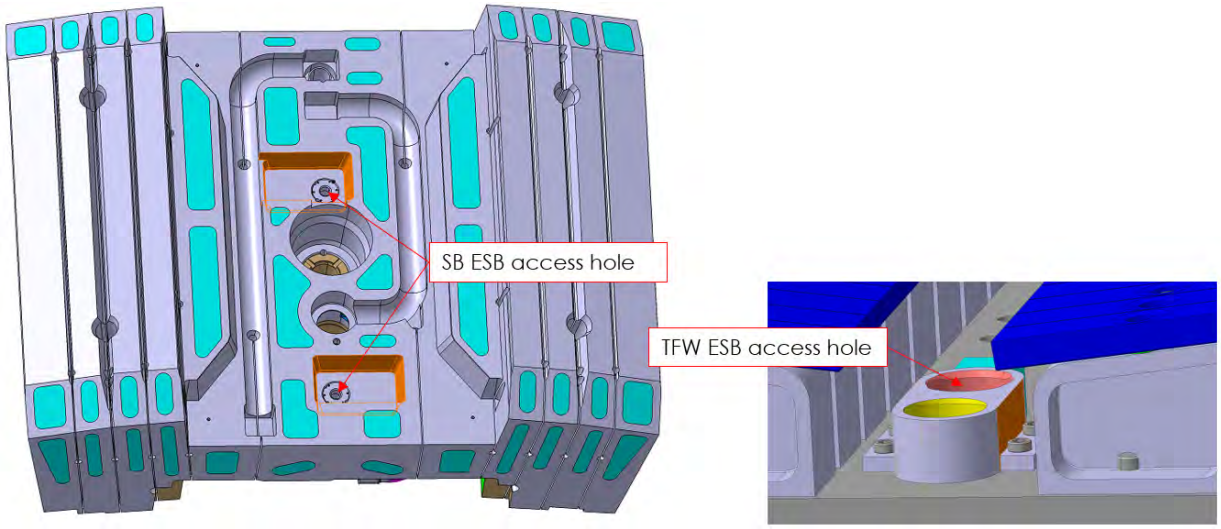

Figure 19 Features (highlighted in orange) to be used for reacting the torque applied on the ESB (left: SB pocket side walls; right: TFW RH interface side walls, and it is possible to use the other RH interface insert, or gripping hole)

The concept design for Electrical Strap Bolt Torquing Tool is shown in the figure below.

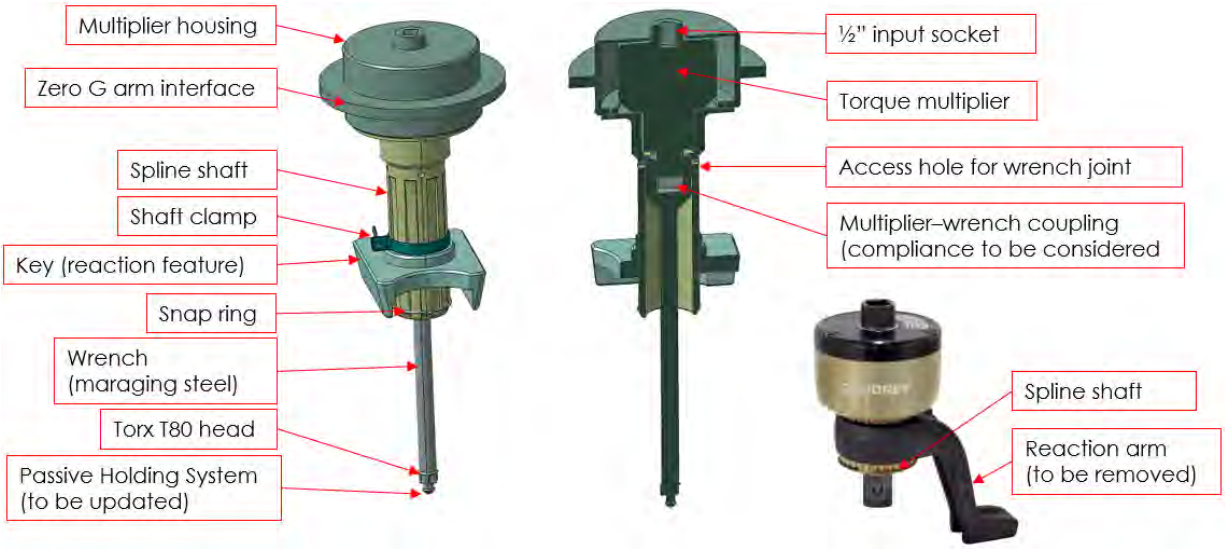

Figure 20 ESBT concept design

The ESBT shown above is a concept design, some of the areas will have to be refined, such as the coupling between the wrench and the interface between the zero G arm and the multiplier housing. The latter interface is highly customizable, so the exact geometry is TBD considering accessibility and ergonomics. Also, the multiplier housing geometry in the figure above is simplified, it will probably have to be welded together from two parts.

The exemplary torque multiplier in Figure 20 is a DREMOPLUS ALU 1300 Nm DVV-13Z from GEDORE:

https://www.gedore.com/en-at/products/torque-tools/torque-multipliers-accessories/torque-multipliers/dvv-13z-torque-multiplier-dremoplus-alu-1300-n-m---950-lbf-ft/dvv-13z---2653370 (accessed on 09/12/2024)

This type of multiplier has grease inside without sealing at the input and output shafts. Thus, the GEDORE multipliers should always be contained in a housing with one seal at each opening (input shaft + output shaft).

SUPPLY

The torque multiplier above has a gear ratio of 1:5, which means that for a target final torque of 480 Nm, 96 Nm will have to be applied to the top input socket.

Even though the ESBT is a lightweight (below 10 kg) manual tool with the PHS system at the wrench tip, it cannot be expected that an operator can hold it and apply torque at the same time, without damaging the insert, sometimes doing this upside-down in the tokamak. Thus, the ESBT should be designed to be held continuously by a load compensation device (e.g. zero gravity arm), which is connected to the Nacelle and positioned and operated by an operator.

The number of key and wrench variants to be expected (to be confirmed via comprehensive study):

- Wrench: ~4 variants, including 1 variant dedicated to 15ND
- Key: ~8 variants, including ~2 variants for regular SBs and TFWs, ~5 for the SBs presented in Figure 23, Figure 24 and Figure 25, and 1 variant dedicated to 15ND

The total number of variants depends on the final design of the TFW.

Process and Interface Description

Most of the Shield Blocks (e.g. rows 1-6, 9-11 and row 18) share the same SB pocket geometry (SB#4 is one example), which means that the key can be common for all these Shield Blocks. The spline shaft connection with the key allows flexibility for axial alignment, and the ESBT in general will be less sensitive to geometric tolerances of the SB pocket and to the ESB position with respect to the ES pocket position.

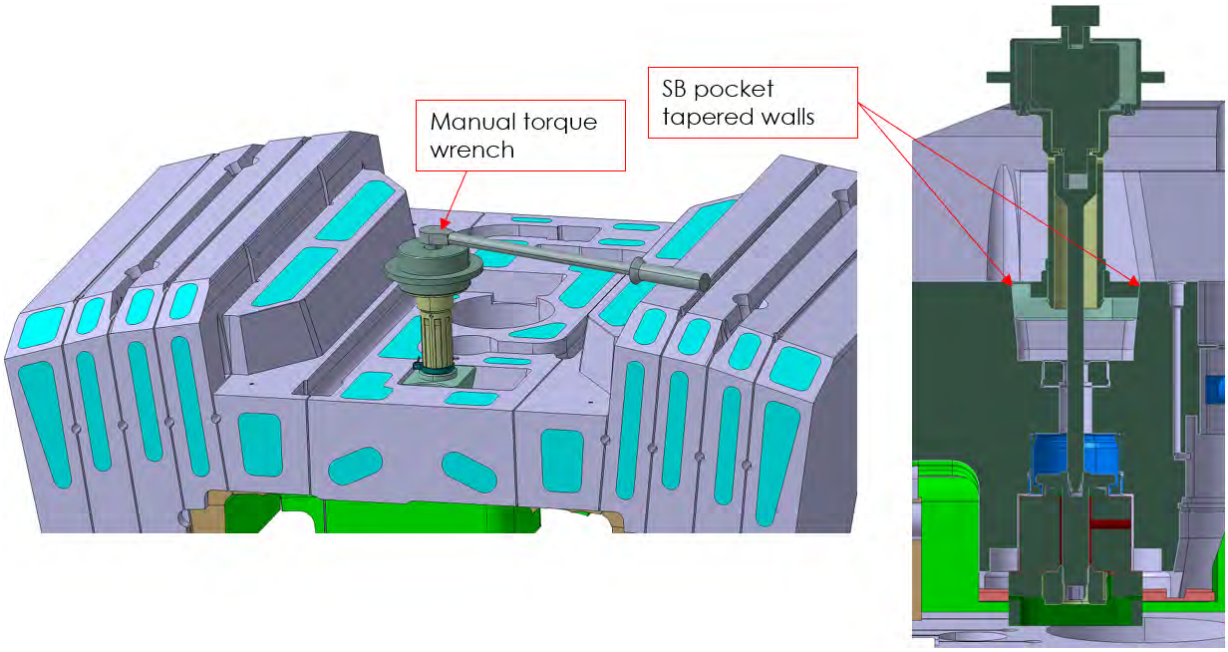

Figure 21 ESBT in the context of SB#4

Shield Block rows 12-17 have narrower pockets, but other dimensions are the same (taper angle, depth), so there will have to be a second version of the key, which is easy to replace. Only the snap ring has to be taken off and the key can be slid off the spline shaft.

SUPPLY

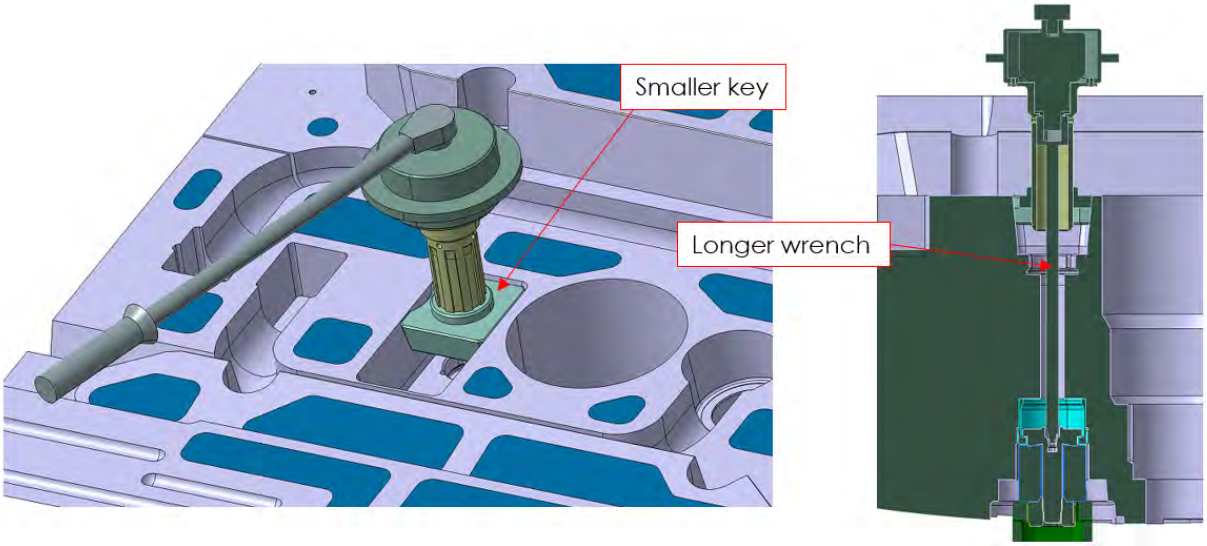

Figure 22 ESBT in the context of SB#15

Also, as can be seen in Table 6, the ESB depth varies a lot from row to row. The configuration shown in Figure 22 shows an example (row 15) where the ES pocket is narrow and the ESB depth is one of the largest. The difference between row 4 and 15 in ESB depth is too much for the spline shaft to cope with, so the wrench should be replaced with a longer one.

Figure 19 above shows reaction features to be used on regular SBs. However, there are a few SB instances, where the SB ES position is not aligned with the FW ES position. This means that the SB ESB access hole is not in the pocket of the FW ES. In these cases, the ESBT will not be able to make use of the pocket side walls in the same way. Instead, the ESBT should have custom key variants interacting in another way with the FW ES pocket or use other features of the SB. The ESBT will be reconfigured with the custom key before targeting one of these special SBs.

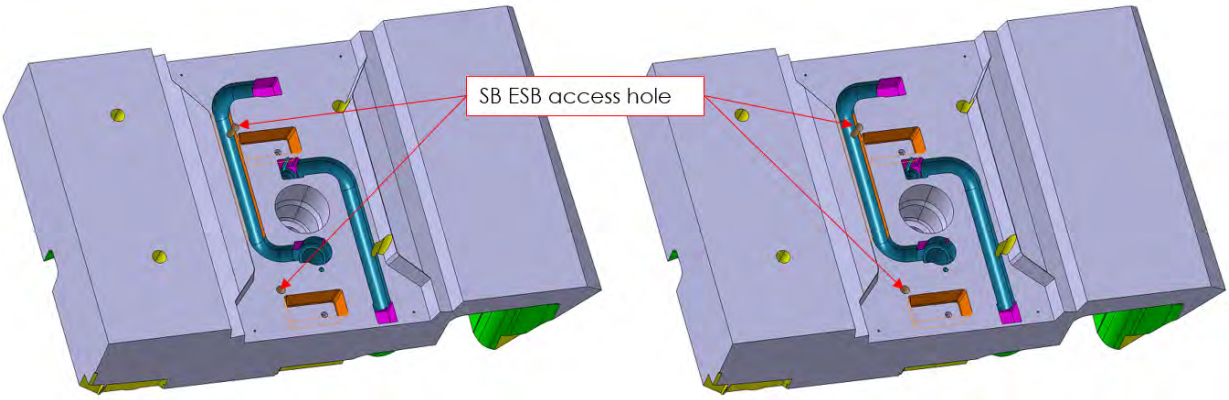

Figure 23 ESB access hole positions on 15NC (left) and 15NCA (right) type Shield Blocks and the features (highlighted in orange) that could be used for reacting the tightening torque applied to ES Bolts.

SUPPLY

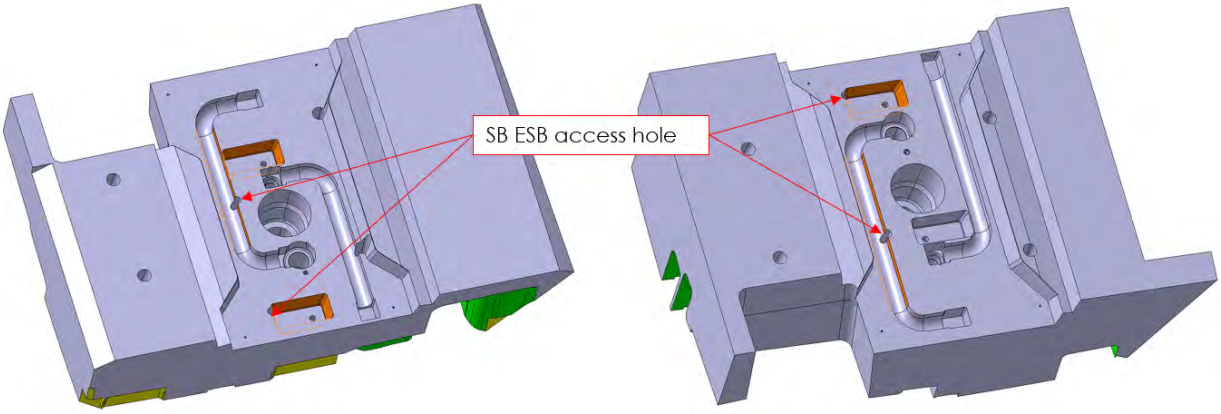

Figure 24 ESB access hole positions on 15NE (left) and 14NE (right) type Shield Blocks and the features (highlighted in orange) that could be used for reacting the tightening torque applied to ES Bolts.

As highlighted in Figure 23 and Figure 24, the ESBT keys for these irregular SBs will need to be custom made for this purpose.

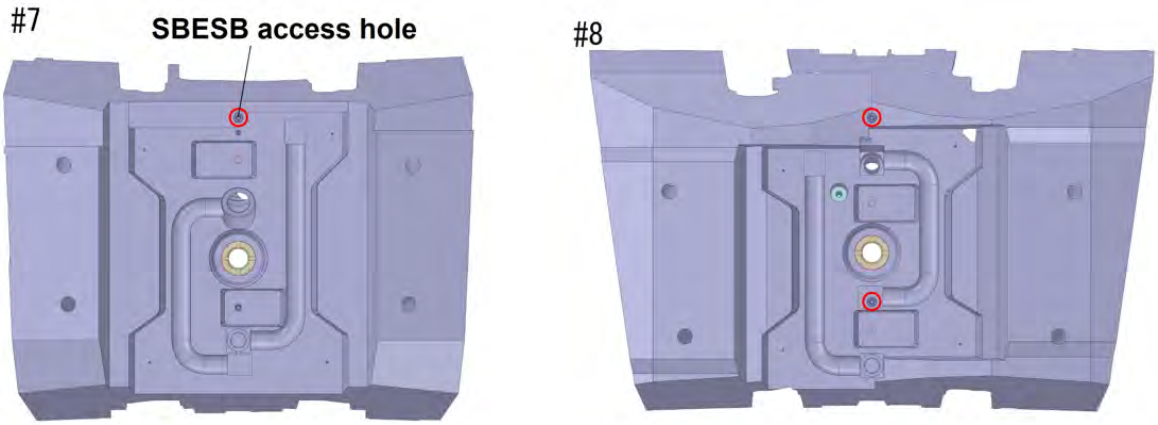

Figure 25 ESB access hole positions on Shield Blocks in row 7 and 8

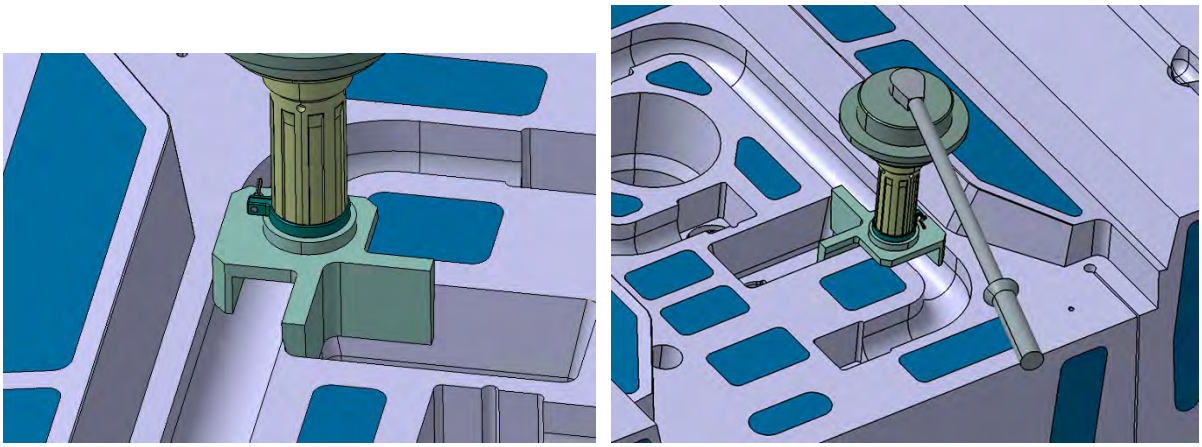

Figure 26 Key design proposal for 15NC

SUPPLY

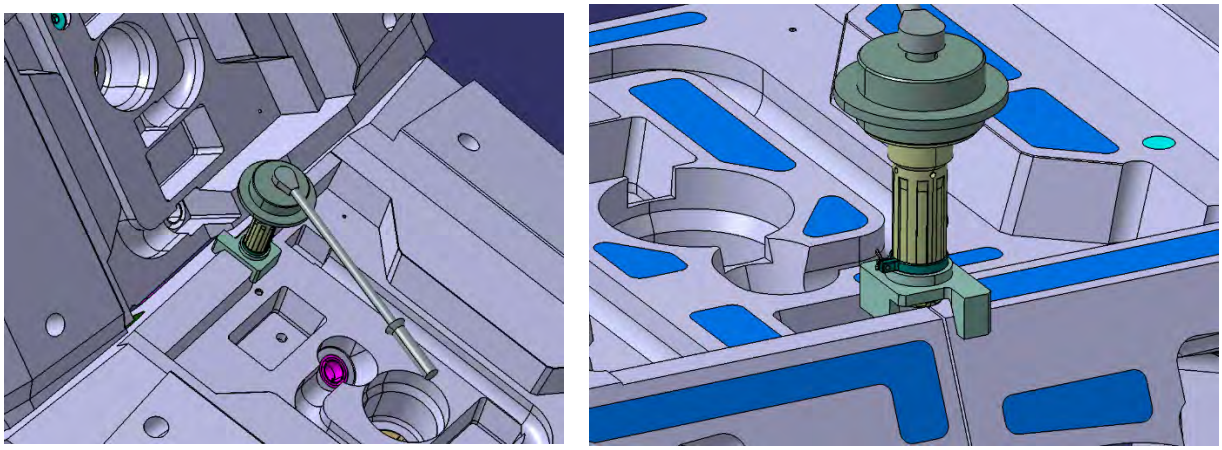

Figure 27 Key design proposal for SB row 8

It is also foreseen that the same ESBT tool will be used on 15ND Shield Blocks for applying the final torque on the one ESB the 15ND has (see Figure 73). For this, another key design will have to be developed.

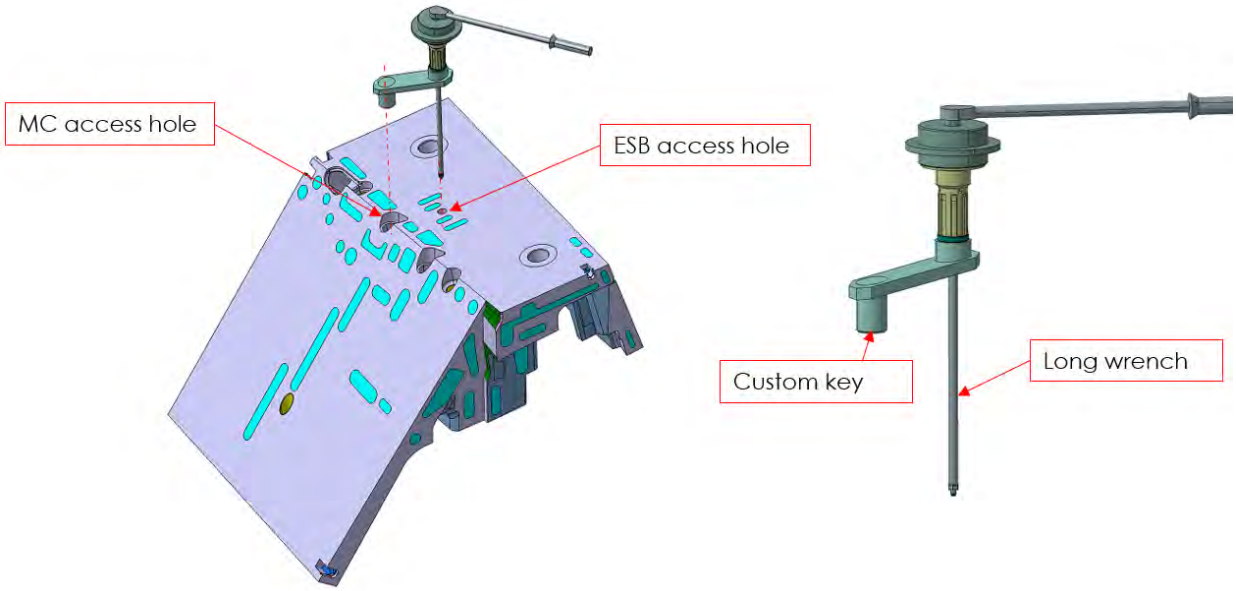

Figure 28 ESBT design for 15ND blocks

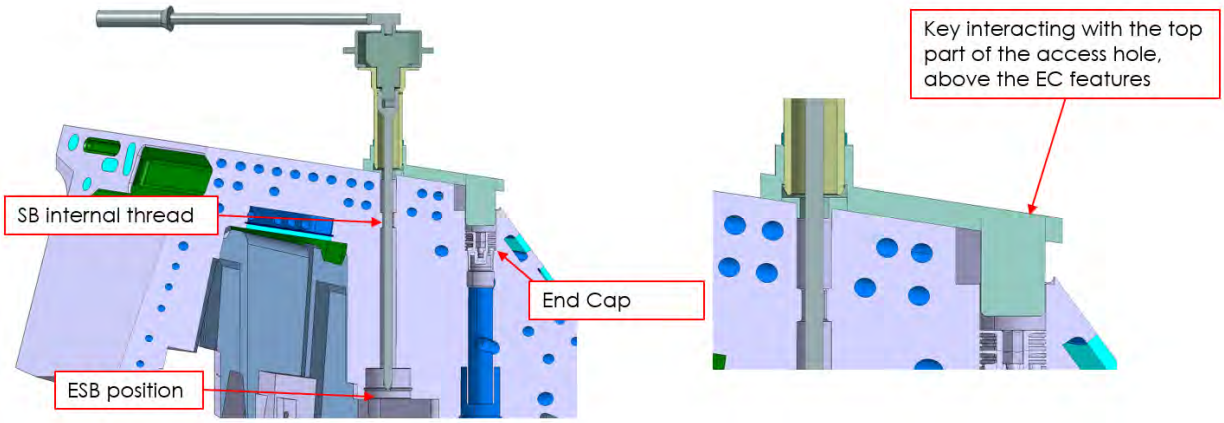

Figure 29 Explanation of ESBT design for 15ND

SUPPLY

In order to avoid lateral movement of the wrench due to the applied force on the wrench handle, either the top part of the ESB access hole (as shown above) can be used as force reaction or else, both MC access holes can be used.

The figure below shows how the ESBT should be used to tighten TFW ES bolts, using the same ESBT design. In fact, the components shown in Figure 30 are the same as the ones in Figure 21.

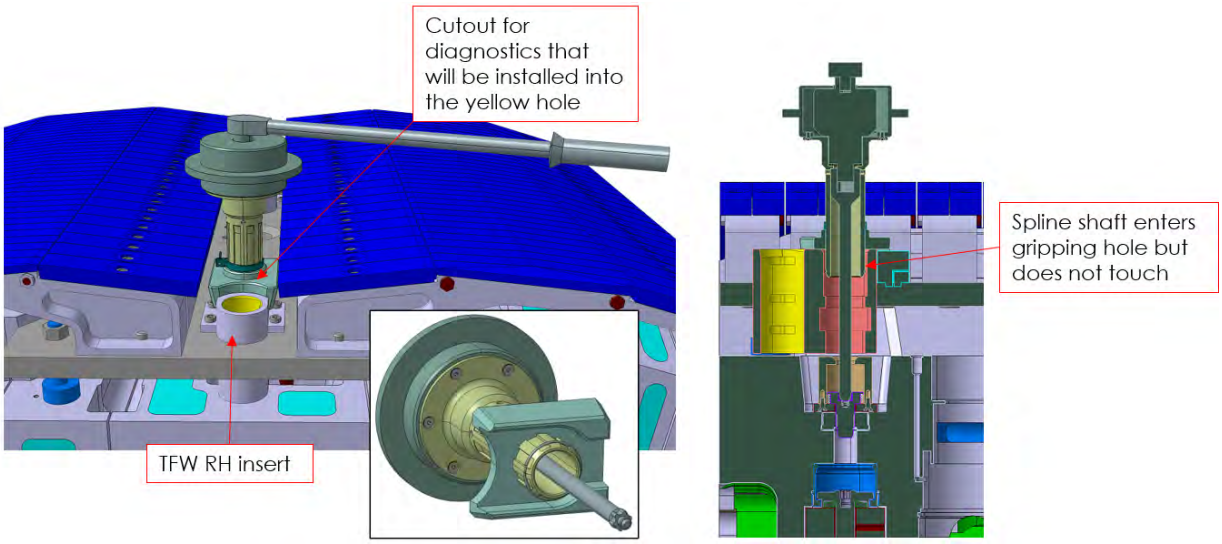

Figure 30 ESBT used on TFW in row #4

It must be noted that TFWs are at CDR phase and if there will be any changes to the interface structure during the TFW design development, IO will assess the impact and then contact JADA to request impact assessment.

4.2.4 Viewing Tool

It is necessary to visually inspect all joints (CC, MC, EC) before and after the welding or cutting operation. This is the first, quick step of the inspection, to check that everything is where it should be and there is no obstruction. Alignment will be measured precisely later by dedicated tools (CCWT and MCAMT) that do not provide footage of the joint, only distance measurement data.

Thus, a Viewing Tool (VT) is to be prepared, which is a unit integrating a portable screen and control system that can easily be handled by an operator on the Nacelle. As a provisional selection, the OLYMPUS IPLEX GX/GT videoscope system or an equivalent product shall be purchased and supplied. Since this is a COTS (Commercial Off-The-Shelf) purchase, FAT / SAT are not required.

Figure 31 Example for an endoscopic visual inspection unit with screen and control system integrated (this example is an OLYMPUS IPLEX GX/GT videoscope system)

SUPPLY

There are only a few specific requirements related to the VT, which all have to do with providing a clear, well-lit, high-definition footage of the joints. The above provisional selection is considered to meet these requirements. The endoscope will reach the joints via the SB access holes, similarly to the Tools used for creating or disconnecting the welds.

In the CC and MC case the pipe joint is perpendicular to the pipe axis, so the endoscope head either must be small enough to be bent at 90 degree or it must have a right-angle mirror at the end. Remotely driven insertion tube can also be used:

https://static3.olympus-ims.com/data/VideoLibrary/Videos/Precisemovements_360.mp4?rev=FB06 (accessed on 19/11/2024)

Figure 32 Remotely driven insertion tube

4.2.5 Shield Block Pulling and Welding Tool Base

The purpose of the Shield Block Pulling and Welding Tool Base (SBTB) is to provide a rigid interface between the SB and the Tools used for pipe welding and cutting operations. Not only does it have to be stiff enough to align and fix Tools with respect to the target SB, but it must provide necessary services to the Tools, including current and shielding gas, and its Embedded Controller box should accommodate motor controllers to control the motors integrated into the Tools. The Tools themselves will have control cables and other service cables that should all be connected to the connectors located on the SBTB.

Design description

The main functions and corresponding sub-systems of the SBTB are as follows:

- **Tool Fixing Unit (TFU)** Provides alignment functionality for Tools
  - XY table for radial alignment
  - Z linear guide for axial positioning can be implemented either in the TFU or Tool
  - Shim block to adjust Tool positions for different SBs.
- **Base Plate** equipped with
  - Central Clamping Mechanism locks the SBTB to the SB
  - Tool Changer interface to allow modular tool exchange
  - Two cameras for robotic vision
  - Embedded controller

The SBTB will comprise a Tool Fixing Unit (TFU), which should provide alignment functionality for the Tools (XY table for radial alignment). Z linear guide for axial positioning can be implemented either in the TFU or Tool side.

The same interfaces are to be used for connecting to the SB as for the SBG (see section 4.2.1.1).

An overview of the SBTB concept is given in the following figures.

SUPPLY

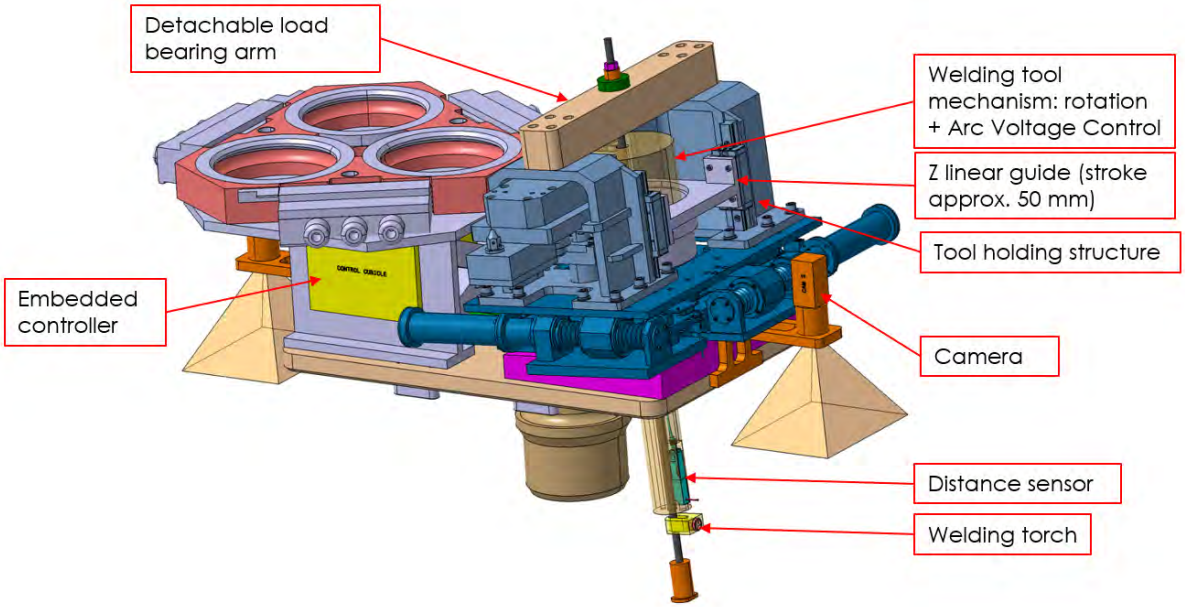

Figure 33 Overview of the SBTB concept (with CCWT mounted) (Z linear guide might be integrated into the Tools eventually)

A more detailed overview of the SBTB concept is given in the figure below.

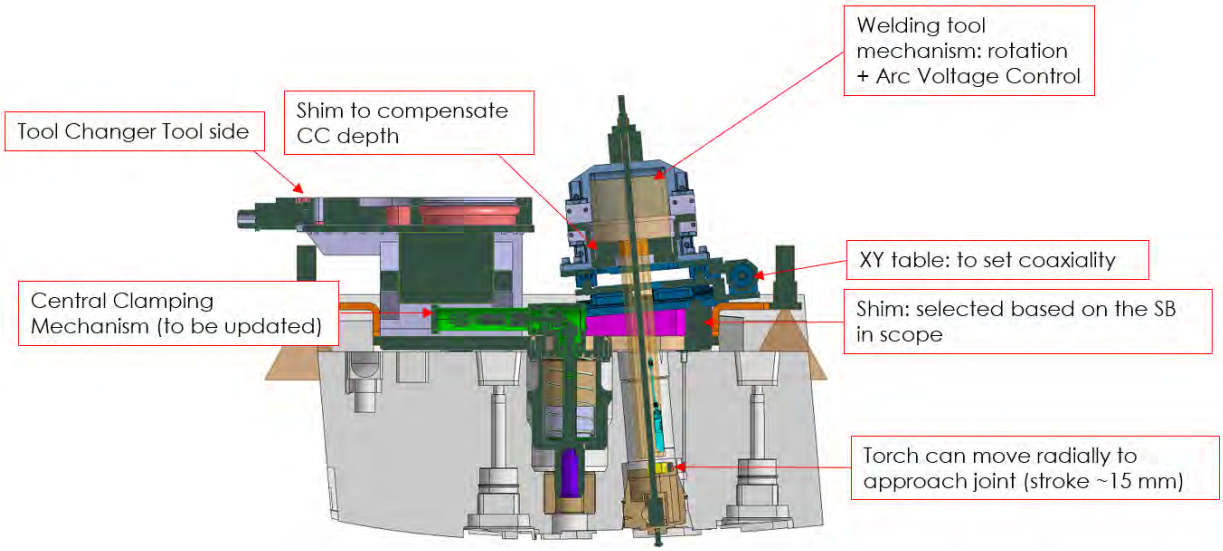

Figure 34 SBTB concept description

The functions described in the figure above are common to all SBTB variants, irrespective of the target SB. As mentioned above, the functions are gathered into modules, which can be reconfigured rather quickly. However, this reconfiguration is to be done ex-vessel.

Similarly, the Tools, which are to be attached to the SBTB, should have a modular design, thus reducing the number of variants. For example, instead of having a large number of CCWT and CCCT variants for different CC depths, they should have one generic design and coarse vertical adjustment should be made by a shim, the thickness of which should correspond to the target SB and which is to be placed between the Tool and the TFU of the SBTB (see Figure 34 and Figure 35). Please note that for a few Shield Blocks, the CC can be tilted in two directions. These should be identified by checking the GAD drawings in [11] or the 3D models.

SUPPLY

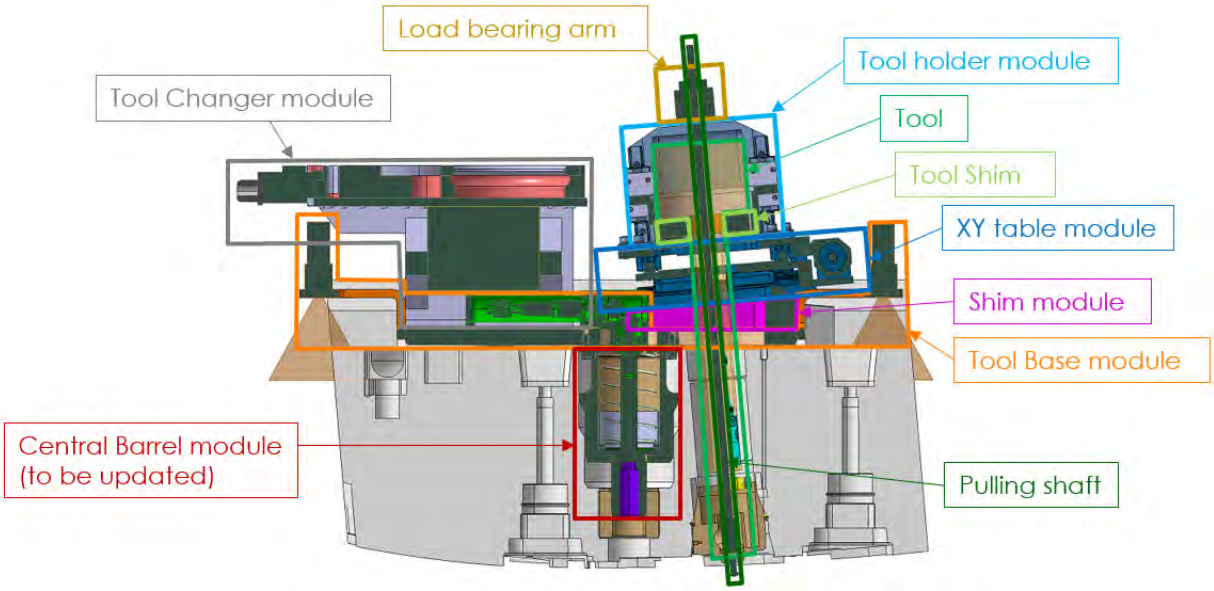

Figure 35 Modules of the SBTB and CCWT

The modules of the SBTB are connected by bolts, thus can be separated easily. Some of the modules will be common for all SBTB configurations (such as the load bearing arm, XY table module and tool holder module (see Figure 36)), whilst some will have smaller or larger number of variants. For example, if the taper angle of the shim is large due to the large inclination of the CC, the Tool Changer will have to move in order not to clash with the tool holder module (an example of this will be shown later for SB #7). Only one shim variant will be required for each SB variant, and the same shim variant might be compatible with multiple SB variants having the same CC angle. Different sizes of Central Barrel modules will probably be necessary to be compatible with all SB geometries. It is also expected that the Tool Base plate will need small modifications (in length, camera placement, pocket dimensions) in order to fit all SBs, CCs and MCs.

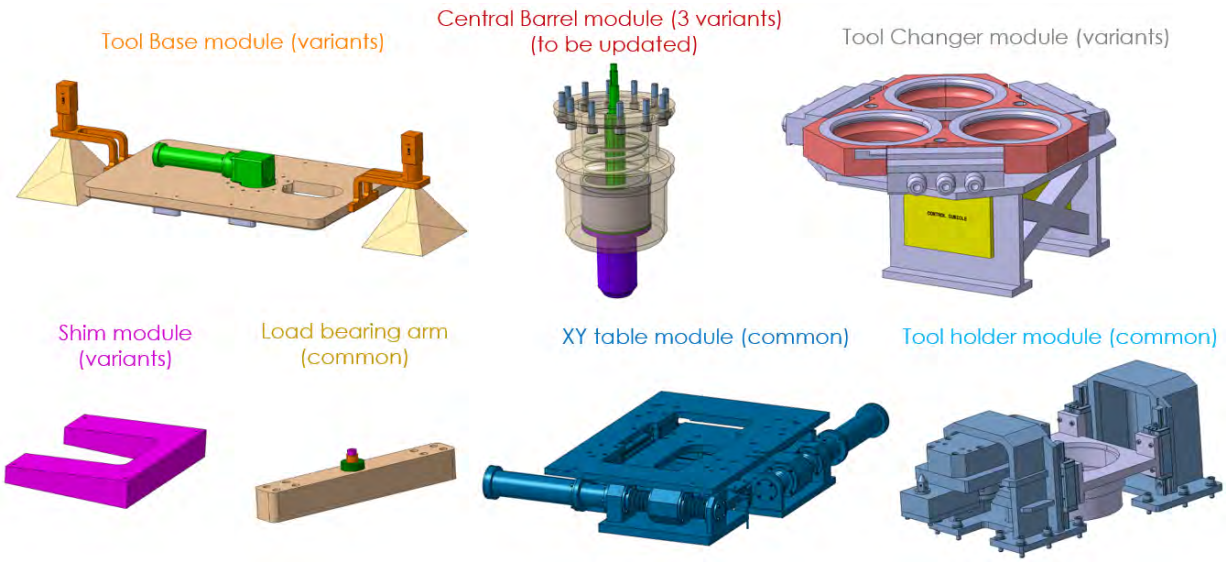

Figure 36 SBTB modules shown separately

One of the key features of the SBTB is the alignment of the Tools with respect to the SB access holes to the Coaxial and Monoaxial Connectors. Radial misalignment should be taken care of by the XY table module, whereas angular misalignment should be avoided by precisely manufactured shim modules. For this, the shims will have to be specific for all CC and MC angles. The residual angular misalignment between the Tool and SB hole is expected to be

negligible compared to the allowed gap and step between the CC (or MC) and the SB pipe stub. There is no need to produce multiple shim blocks or shims to account for manufacturing errors between multiple SBs of the same variant.

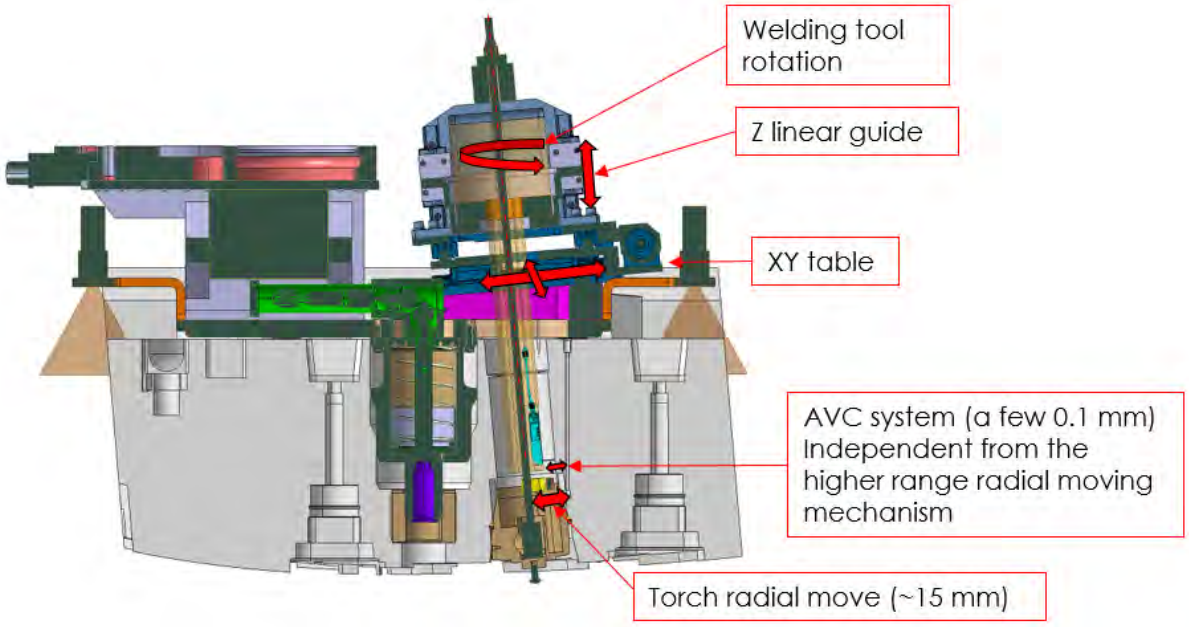

Figure 37 SBTB and CCWT degrees of freedom (Central Barrel module is to be updated) (Z linear guide might be integrated into the Tools eventually)

The total number of DoFs, when assembled with CCWT, can be seen in Figure 37. As discussed earlier, the XY table is needed to correct radial misalignment, precise shimming will prevent angular misalignment and another custom shim between the Tool and the TFU will align the torch (or cutting blade) with the pipe joint axially.

The purpose of Z linear guide, shown in Figure 38 and Figure 37, is to lower and raise the tip of the Tool with respect to the nominal position. The CCWT design will include an embedded distance sensor, which is mounted with an axial offset with regards to the position of the welding torch. After applying the pulling force, the residual gap and step between the CC/MC and the SB stub should be measured by the distance sensor and if it is acceptable, the Tool can be raised back to perform the weld.

Process and Interface Description

The SBTB will be transferred into the VV by the IVDT and picked up by the BAT for in-vessel positioning. For this, two cameras are needed at the SBTB plate ends, facing the target SB. After the SBTB is positioned on the target SB, the embedded Central Clamping Mechanism of the Tool Base is engaged with the SB insert.

Given the large number of CC and MC angles (with respect to the CB angle) and positions (with respect to the CB axis position), multiple SBTB variations will be needed. However, the SBTB concept presented in Figure 33 has a modular design, which can be easily reconfigured for different SBTB variants.

SUPPLY

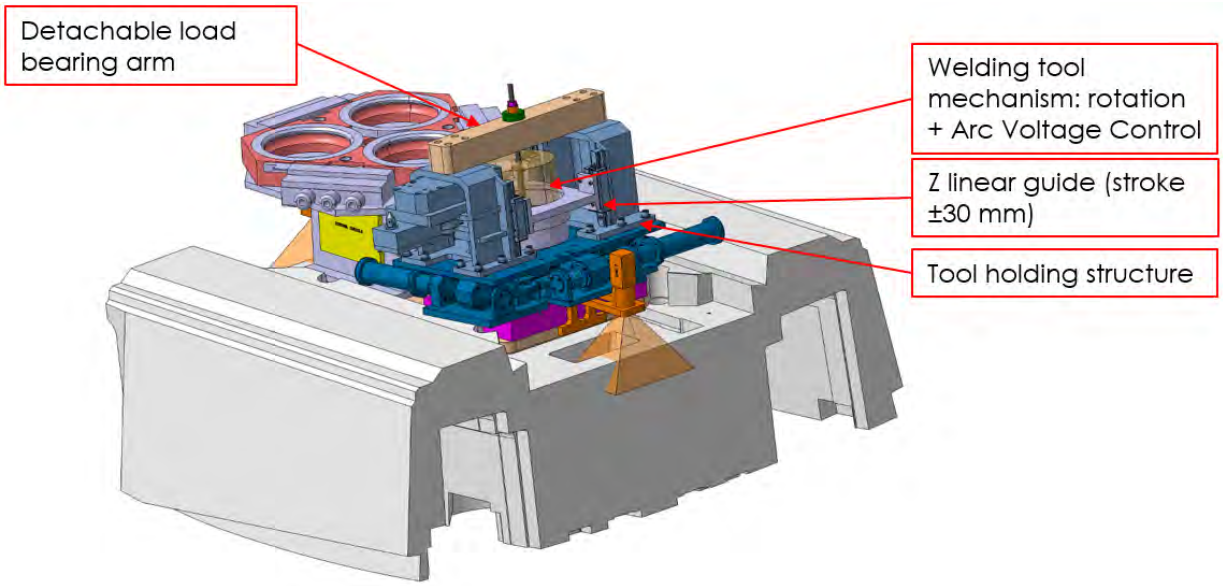

Figure 38 Shield Block Pulling and Welding Tool Base in the context of Shield Block #15 (Z linear guide might be integrated into the Tools eventually)

When the SBTB is configured ex-vessel for a given target SB, neither the Tool nor the load bearing arm (see figure above) is connected to the Tool Base.

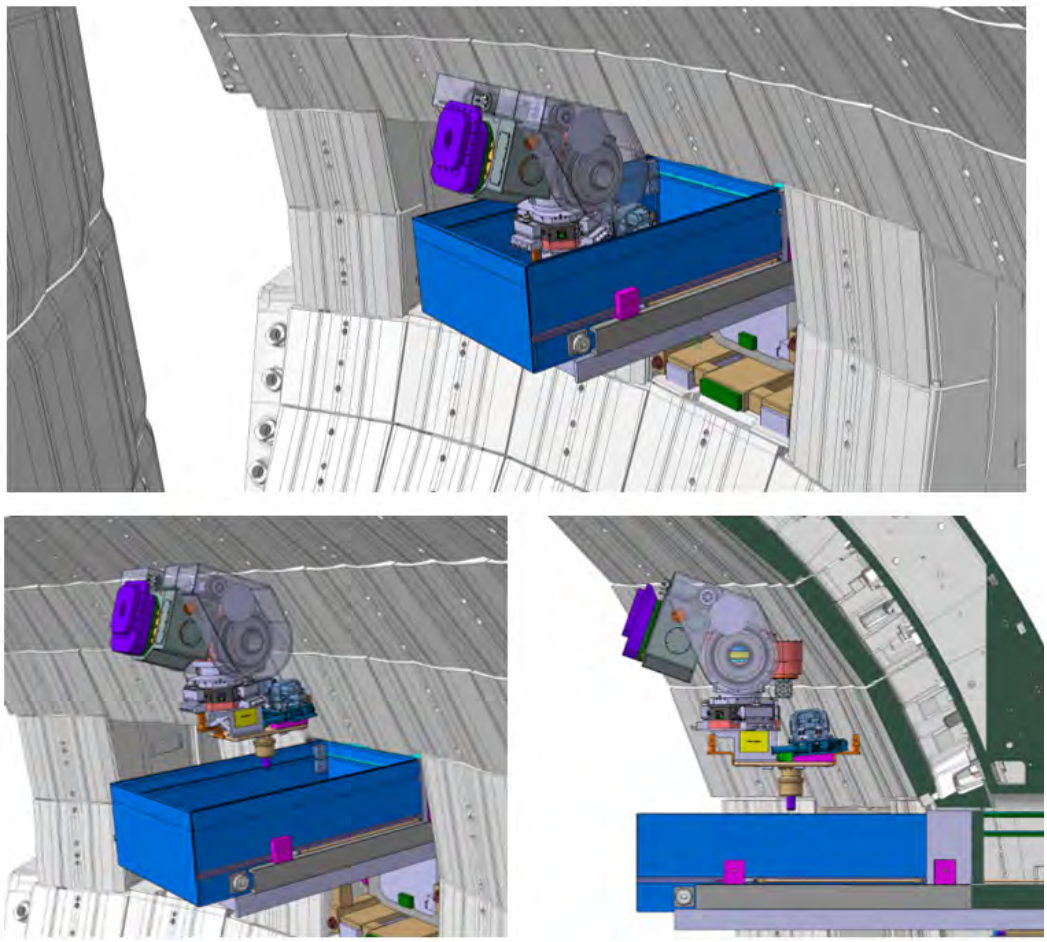

Figure 39 Retrieval of the SBTB from the IVDT (the rest of the BAT arm is not shown)

The in-vessel assembly of the SBTB includes a few quick and simple steps that can be carried out by an operator. For the Tool handling, the operator should use a zero G arm, until it is secured firmly to the TFU of the SBTB.

SUPPLY

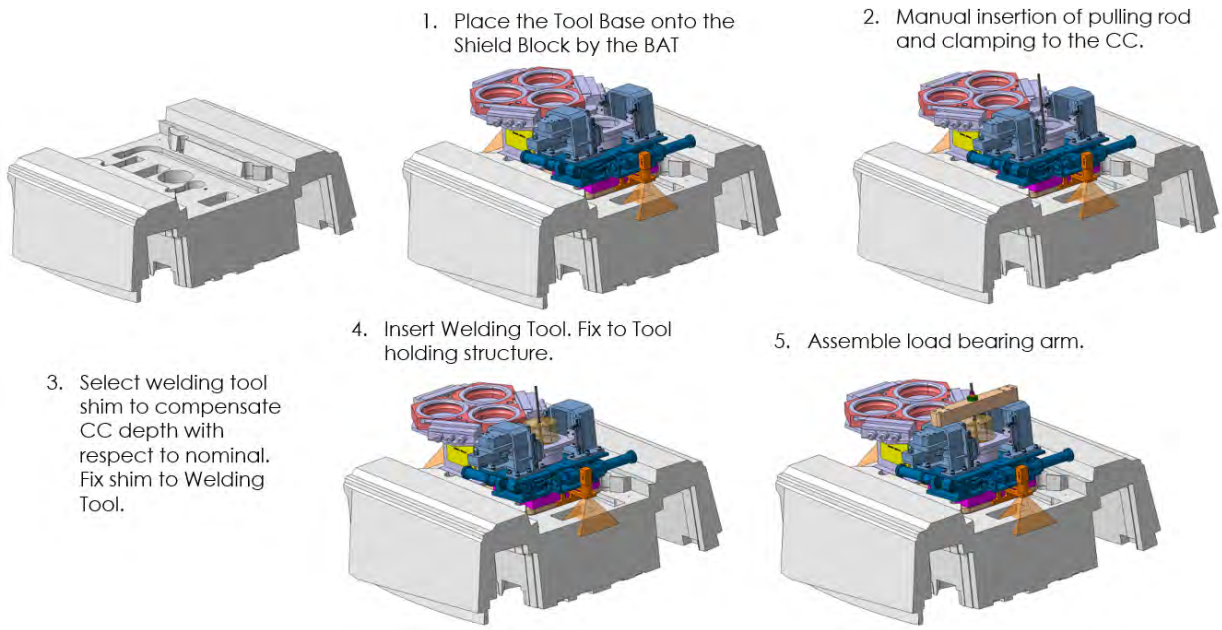

Figure 40 In-vessel assembly steps of the SBTB

In Figure 40, the assembly steps are shown for CCWT in the context of SB#15. For all the other tools (CCCT, MCAMT, MCPT, MCWT, ECWT, ECCT), there are even fewer steps, and the assembly is reduced to fixing the tool to the TFU or using the load bearing arm only (probably in the case of MCPT).

Welding operations will be performed after FCB and ESB tightening. The sequence of the complete welding scenario for CC welding is the following:

<u>Assembly</u>

(0.) Configure SBTB modules ex-vessel, send into the vessel via the IVDT to be picked up by the BAT arm

1. Place the Tool Base onto the target Shield Block. Automatic locking of the Tool Base to the SB via Central Clamping Mechanism
2. Select welding tool shim to compensate CC depth with respect to nominal. Fix shim to Welding Tool.
3. Insert Welding Tool with the use of the zero G arm. Fix to Tool holding structure.
4. Do rough alignment with the XY table.

<u>Fine alignment</u>

7. Set Welding Tool height so that the displacement sensor is facing the pipe joint.
8. Measure radial misalignment (eccentricity) with respect to the SB stub. For this, the Z linear guide and the built-in rotation of the welding tool should be used.
9. Adjust on XY table until an acceptable radial misalignment is achieved.

<u>Pulling</u>

10. Lower CCWT until the displacement sensor is in line with the joint to be welded.
11. Apply 2-ton pulling force (20 kN).
12. Measure misalignment between the joint sides. If the misalignment is not acceptable, try with a higher pulling force (up to 30 kN).

<u>Welding</u>

13. Raise CCWT so that the welding torch is at the joint position.

SUPPLY

14. Approach the joint with the welding torch.
15. Produce weld. Use built-in AVC system to enhance weld properties.
16. Release pulling force.

Inspection

17. Lower Welding Tool until the displacement sensor is in line with the joint
18. Scan the weld bead.

After the last step the CCWT can be removed from the SBTB to make space for NDT equipment.

So far, the SBTB has been presented in the context of SB#15. However, as can be seen in the table below, the angle between the CC and the CB axes varies significantly from one SB to another, meaning that the shim angles will have to vary with them.

SB	Angle between CB & CC (or MC)	Distance between CC and SB hole opening
	deg	mm
1	0	79.8
2	0	79.8
3	0	79.8
4	0	79.8
5	0	79.8
6	1.1	93.5
7	26.8	77.2
8	16.3	MONOAX
9	4.4	86.1
10	5.8	69.3
11C	1.8	148.2
11ECH	1.8	148.2
11S	1.8	155.8
12	5.0	145.5
13	5.2	137.6
14	6.7	181.5
15	4.8	189.4
16	5.9	117.8
17	4.2	124
18	0	MONOAX
14 NB	6.7	128.9
14 NC(V)	6.7	190
14 ND(V)	6.8	172.2
14 NDL	6.7	172.2
14 NE	6.7	164.8
15 NB	4.8	136
15 NC(V)	5.6	191.1
15 ND		MONOAX
15 NDL		MONOAX
15 NDV		MONOAX
15 NE	5.6	183
15 ST	4.7	159.3
16 ST	5.9	87.7
18 ANU	0	MONOAX
18 E	0	MONOAX

Table 8 CC position and alignment variants [2]

The most extreme case is SB#7, where the tilt of the CC is 26.8 degrees. In order to cope with this large angle, the SBTB will have to be reconfigured with a new Tool Changer holder module as well.

SUPPLY

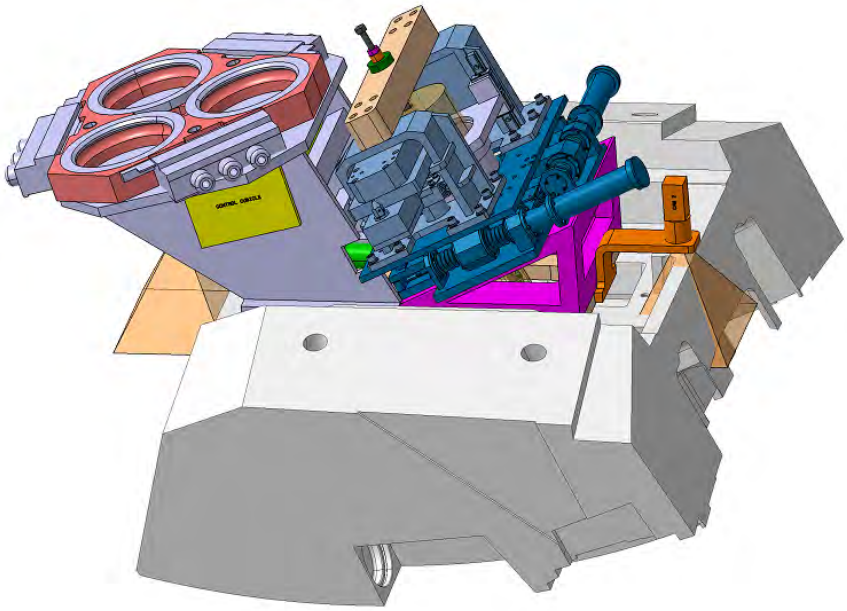

Figure 41 SBTB for SB#7

When it comes to cutting, saw cutters produce swarf that needs to be removed from the SB to the best possible extent. A vacuum channel should be included in the cutting tool design, and a socket to connect the suction hose to. On the SBTB, a compact vacuum cleaner should be located somewhere, with current feed from the Embedded Controller. From the vacuum cleaner, a suction hose should be connected to the cutting tool socket on its stationary part. The vacuum cleaner should be detachable from the SBTB by hand, because it is only needed for cutting tools.

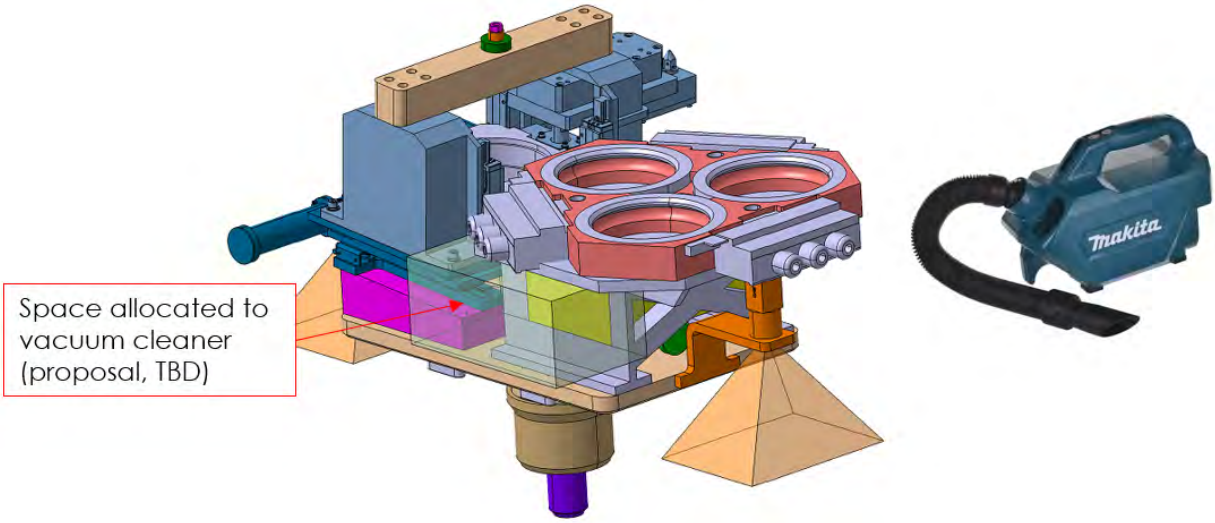

Figure 42 Proposal for vacuum cleaner location on the SBTB

4.2.6 Coaxial Connector Welding Tool

The purpose of the Coaxial Connector Welding Tool is to make the welded connection between the SB stub and the CC. The CCWT has CC pulling function to position it for welding with the SB stub, measurement function for checking the groove fit-up, and the welding function for CC and SB stub.

Design description

The main functions and corresponding sub-systems of the CCWT are as follows:

SUPPLY

- **Tool head**
  - Enclosure for rotation and translation (Z drive) mechanisms
  - Interface with SBTB TFU
  - Cable management
  - Zero G arm interface
- **Pulling mechanism**
  - 2 ton (extendable to 3 ton) pulling force on CC to engage with SB stub
- **Displacement sensor**
  - Measurement of misalignment between the axes of the SB hole and the CC
- **Welding torch mechanism**
  - Full penetration weld between SB pipe stub and Coaxial Connector (ID ø101 mm, thickness 2.5 mm)
  - AVC mechanism
  - Extendable welding torch (ø70 mm → ø101 mm)
  - Feed of inert gas to welding area

The previous section already provided some insight to the Coaxial Connector Welding Tool (CCWT) concept, as it was used as an example for the SBTB.

The CCWT will have multiple functionalities to achieve a successful weld between the CC and SB pipe stub. The CCWT has CC pulling function to position it for welding with the SB stub, measurement function for checking the groove fit-up, and the welding function for CC and SB stub

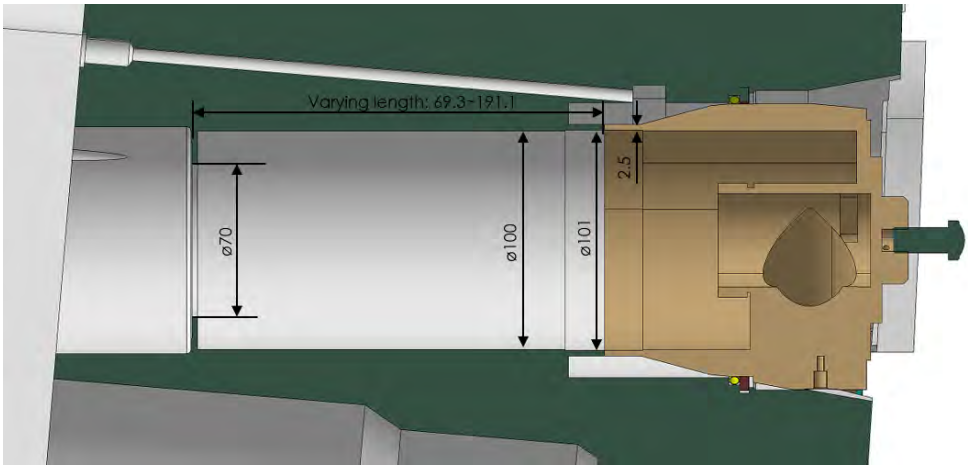

Figure 43 Cross-section of the SB at the CC position

When the SB is installed to the VV, the CC will not be in its final position showed in Figure 43, but it will be pushed down towards the VV by the SB. Pulling force will need to be applied in order to engage the CC with the SB tapered hole and then with the Helicoflex seals (see Figure 5).

This force is to be exerted by a pulling mechanism integrated into the CCWT design. Due to the expected spring-back effects, the pulling force should be applied during the whole welding process, which means that when the welding tool rotates, it must rotate around the stationary inner pulling mechanism.

The CCWT should also comprise a displacement sensor as pipe alignment measurement system. This sensor should be axially offset with respect to the welding torch, which means that for the distance measurements the CCWT will have to be moved axially. The purpose of the displacement sensor is to provide radial misalignment measurement before pulling to set coaxiality with the SBTB XY table and to make a full 360-degree scan of the pipe joint before

and after welding. Before welding, the aim is to check the residual gap and step between the CC and the SB stub. If the misalignment is out of range, the pulling force should be raised, and measurement should be repeated. After welding, another measurement must be made, but now the aim is to do a quick scan to see that the weld bead has been formed properly, before proper NDT testing.

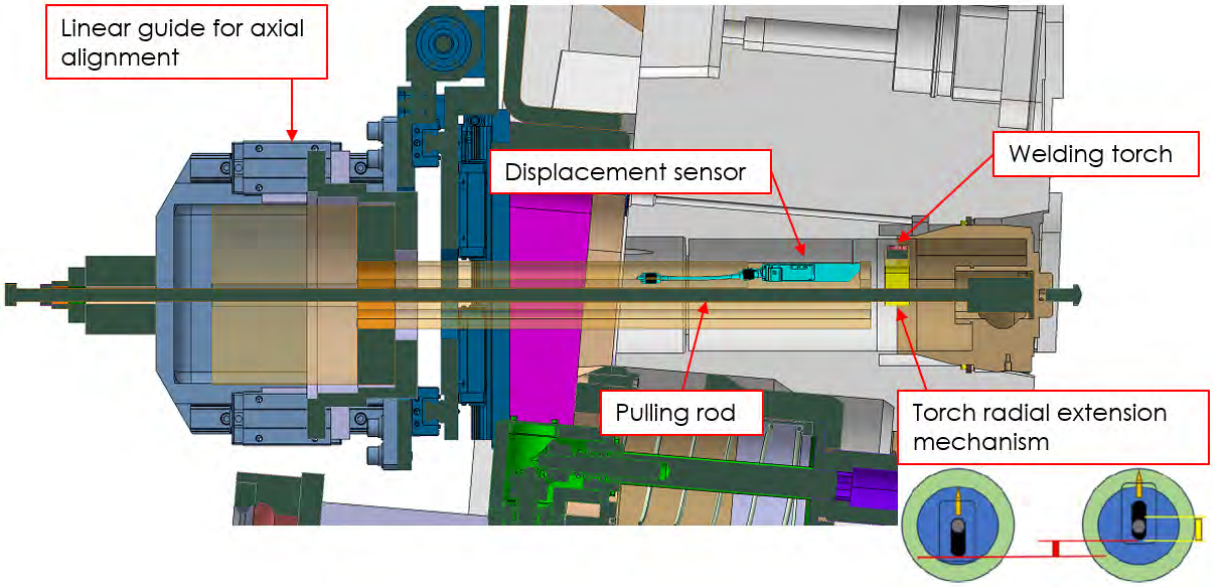

Figure 44 Overview of the CCWT main components

As the CCWT has to pass the SB hole opening (diam. 70 mm), the outside diameter of the CCWT is limited. When the welding torch is in position and aligned with the pipe joint, it will be 15-20 mm away from the pipe wall. To cross this gap, the welding torch must be moved radially by an extension mechanism to set the required stand-off distance (see bottom right corner of Figure 44). In addition to this extension mechanism, an Arc Voltage Control system should be integrated into the CCWT head design, which can move the torch in-out radially in a controller manner during the welding process.

As the welding torch and displacement sensor will move relative to the TFU, cabling will have to follow. Cable management for these should be taken care of within the enclosed volume of the CCWT.

The pulling rod of the CCWT should connect to the internal bottom slot of the CC. It should be noted that these internal slots, are not aligned angularly with the SB, meaning that it should be checked first by the operator how they are aligned and then the pulling rod tip will have to positioned accordingly.

The pulling rod should be threaded (see Figure 45), and preload should be applied by simply torquing a nut, thus converting rotational torque into a pulling force. The rod end, however, should have bolt head feature to prevent rotation after aligned with the MC bottom slots.

A load cell should provide force feedback from the pulling rod preload. This is to be placed below the nut, as shown in Figure 45.

SUPPLY

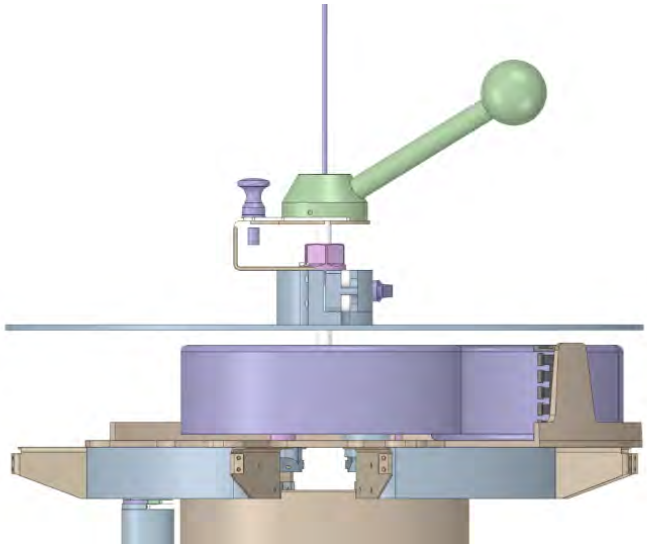

Figure 45 Pulling rod head components

Process and interface description

The CCWT will be brought into the vessel via the TSR (see section 4.2.20). Then, an operator on the IVTC Nacelle will use the zero G arm to pick the CCWT from the TSR and move it to the SBTB already mounted on the target SB. The CCWT will be locked to the TFU of the SBTB via clamps.

4.2.7 Coaxial Connector Cutting Tool

The purpose of the Coaxial Connector Cutting Tool is to cut to connection between the SB stub and the CC.

Design description

The main functions and corresponding sub-systems of the CCCT are as follows:

- **Tool head**
  - Enclosure for rotation and swage cutter feed mechanisms
  - Interface with SBTB TFU
  - Cable management
  - Zero G arm interface
- **Tool alignment mechanism**
  - Fix and align the Tool axis to the CC
- **Cutter**
  - Double swage cutter
  - Radial feed mechanism
- ***Accessory: Pipe Facing Tool***

The context is the same for the Coaxial Connector Cutting Tool (CCCT) as for the CCWT (see Figure 43). The pipes are to be cut with a double swage cutter cutting head with radial feed. A pipe alignment mechanism should provide stabilization and fixing at the head of the tool, making use of the inner pipe of the CC.

The CCCT must pass the diam. 70 mm opening of the SB, so the swage blades will have to be mounted on a mechanism that can extend and retract them radially.

A conceptual design has already been developed for the CCCT, which covers some of the functions mentioned above.

SUPPLY

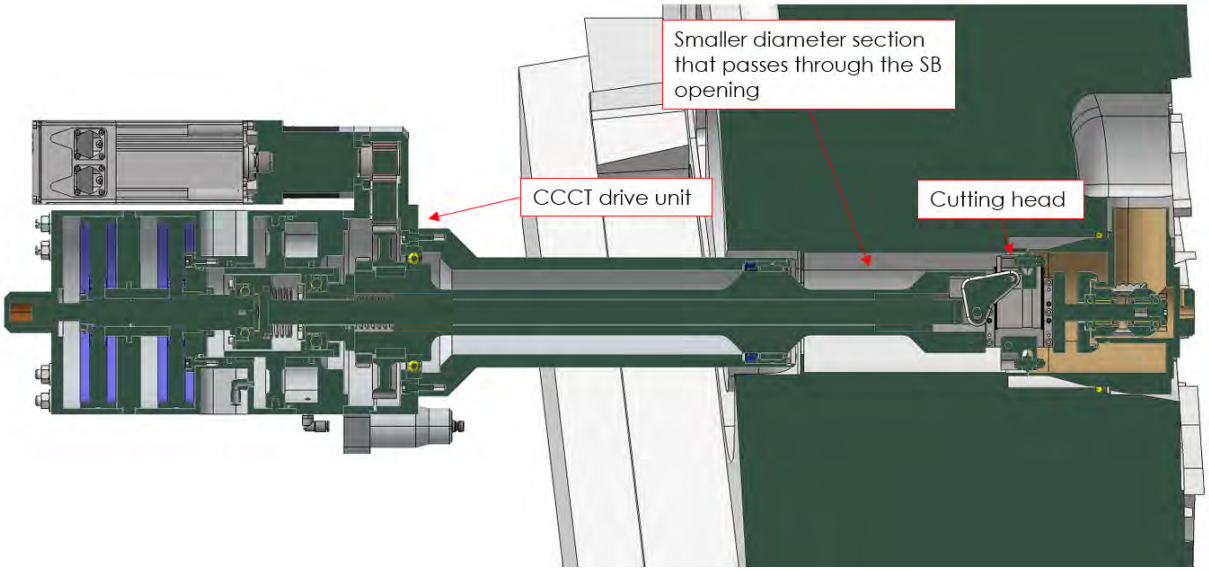

Figure 46 CCCT concept design

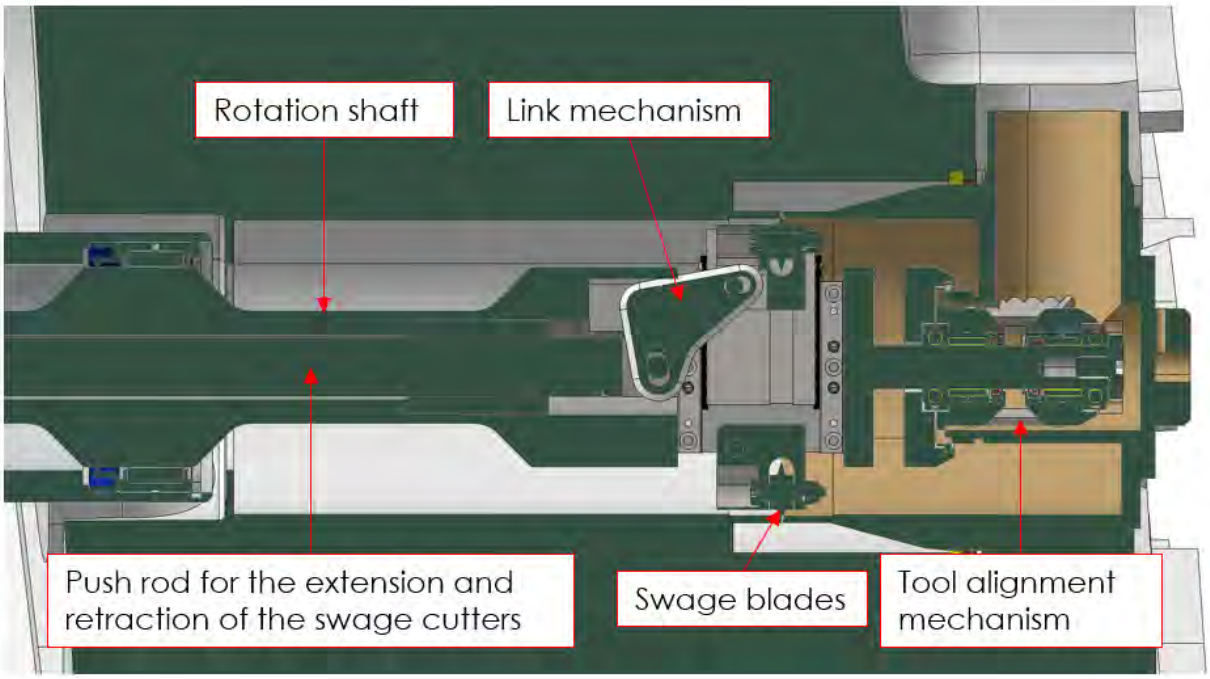

Figure 47 Cutting head of the CCCT concept design

The concept design presented in the figures above and has a few points, where it does not meet the requirements listed in Ref. [1] yet. The missing points are:

- The CCCT should be made compatible with as many SB designs as possible. For this, the smaller diameter end part of the tool must be longer, to be able to cover the varying distances between the SB-CC joint and the SB opening presented in Table 8 and Figure 43.
- One requirement in [1] is to constantly monitor the cutting force/torque required to achieve the preset feed rate. It is preferable that the radial feed of swage blades be motor-driven. This is intended to detect when the cutting is complete.
- Greased parts, such as bearings and gears, should be enclosed in sealed volumes. The concept design must be modified accordingly.

SUPPLY

As an accessory to the CCCT a handheld Pipe Facing Tool is to be developed to provide a surface that is good enough for rewelding procedures. The exact required surface quality should be defined by testing.

Figure 48 Example of a Pipe Facing Tool

Process and interface description

The CCCT will be brought into the vessel via the TSR (see section 4.2.20). Then, an operator on the IVTC Nacelle will use the zero G arm to pick the CCCT from the TSR and move it to the SBTB already mounted on the target SB. The CCCT will be locked to the TFU of the SBTB via clamps.

When the cutting operation is complete, the tool and then the Tool Base are taken away. The Shield Block is then removed from the vessel via the BMTS.

After this, when the area around the CC is free, an operator can come with the Nacelle to use the Pipe Facing Tool to produce a proper cut surface for rewelding operations. The operator will set temporary protections beforehand, to avoid spreading swarf and will vacuum out everything afterwards.

4.2.8 Monoaxial Connector Pulling Tool

The purpose of the Monoaxial Connector Pulling Tool is to pull the MC into place to engage with the SB.

Design description

The main functions and corresponding sub-systems of the MCPT are as follows:

- **Tool head**
  - Enclosure for pulling mechanism
  - Interface with SBTB and 15NDTB TFU
  - Cable management
  - Zero G arm interface
- **Shell design**
  - To accommodate MCAMT and MCWT.
- **Pulling lock end**
  - Interacting with the MC slot to apply the pulling force
  - 2 ton (extendable to 3 ton) pulling force on MC to engage with SB stub

SUPPLY

When it comes to welding/cutting the Monoaxial Connectors, the environment is different from that of the CC. The pipes are smaller in diameter, which calls for more compact designs.

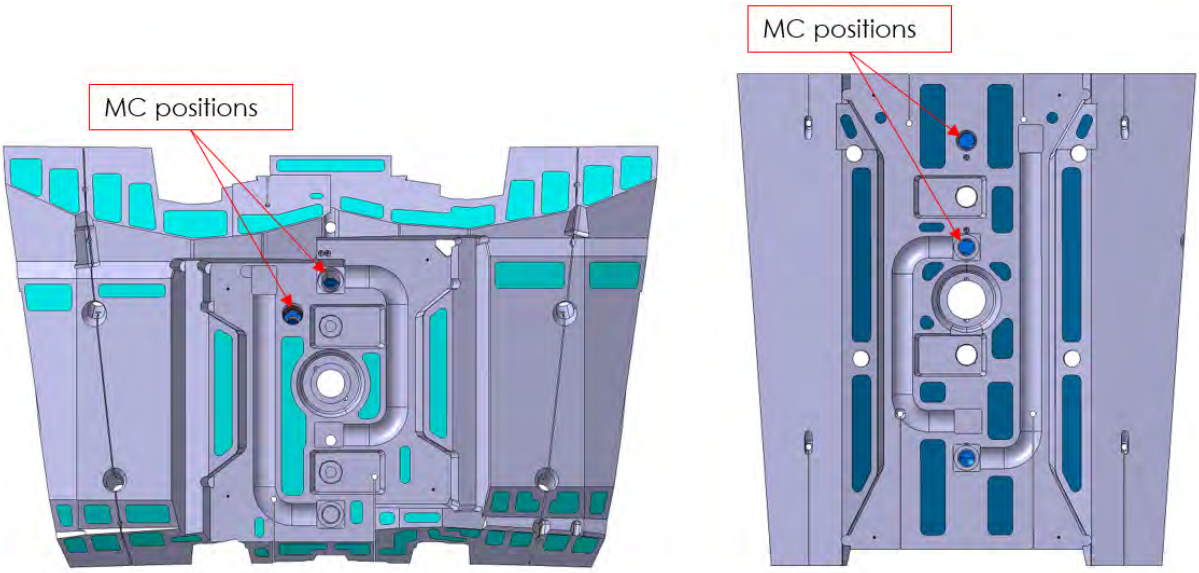

Figure 49 MC positions on SB#8 (left) and #18 (right)

In addition to having 2 MC connections instead of one CC, SB#8 has a large tilt angle between the MC and the CB axes (see Table 8). Therefore, the SBTB concept design has been adapted to this SB, to show that with an appropriate shim design the same equipment can be used (see Figure 54).

Just like the CC, the MC needs to be pulled continuously during welding. The force needed is the same as in the case of the CCWT, 30 kN at the maximum. Due to the confined space related to the MC configuration (see Figure 59), the structure of the MCPT should be the inverse of the CCWT, in the sense that instead of the stationary central pulling rod the MCPT should have a hollow cylinder that can apply the pulling load on the locking mechanism at the tip and at the same time it should accommodate the MCAMT and MCWT tools.

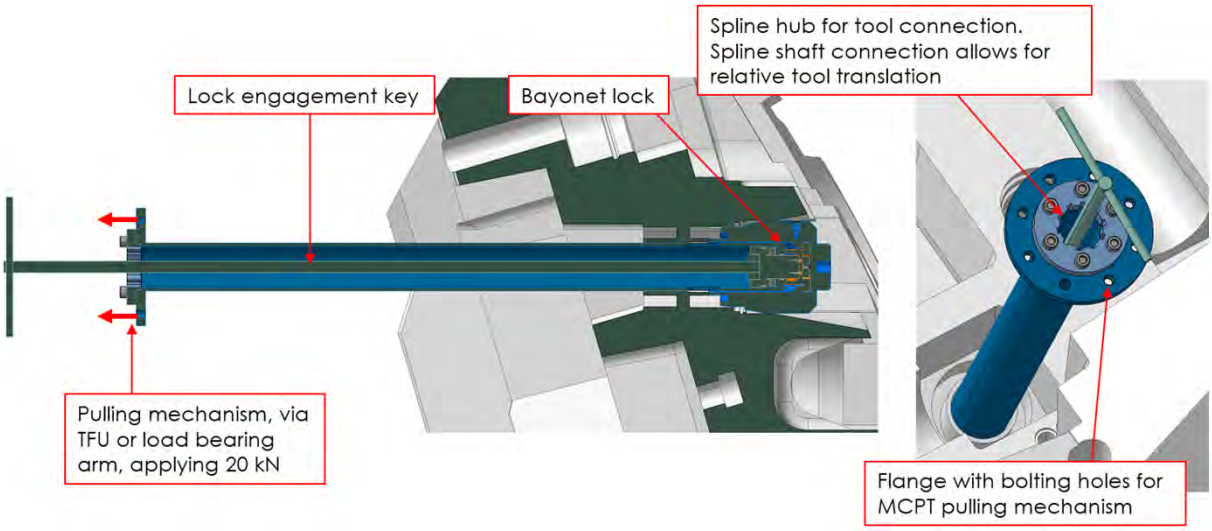

Figure 50 MCPT concept design

As the MCAMT and MCWT needs a window through the cylinder of the MCPT for sensor light and welding torch respectively, the MCPT cylinder will have to rotate with the tools so that the window is always aligned with the sensor or torch. However, the locking tip has to be stationary, which means that the MCPT cylinder should be able to rotate freely with respect to the locking mechanism.

SUPPLY

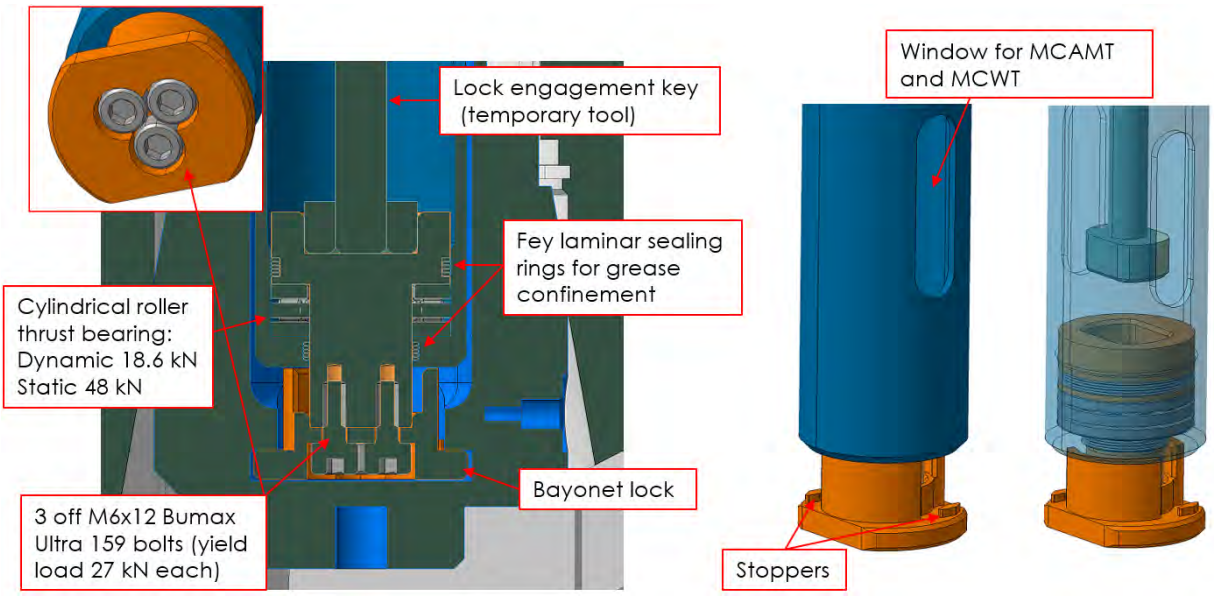

Figure 51 Locking mechanism tip of the MCPT

In the concept design presented above the locking mechanism is engaged with the MC slot via a lock engagement key, which is reaching down the MCPT cylinder to be inserted into the slot of the lock. Stoppers machined into the lock will provide a solid hard stop for the operator to know when the lock is fully engaged. The lock engagement key is manually operated and should be removed when the lock is engaged to make space for tools.

The lock concept presented in Figure 51 is only one possible solution. Another solution is shown below, where instead of the 3 M6 bolts, one central thread transfers the pulling load to the locking feature at the bottom.

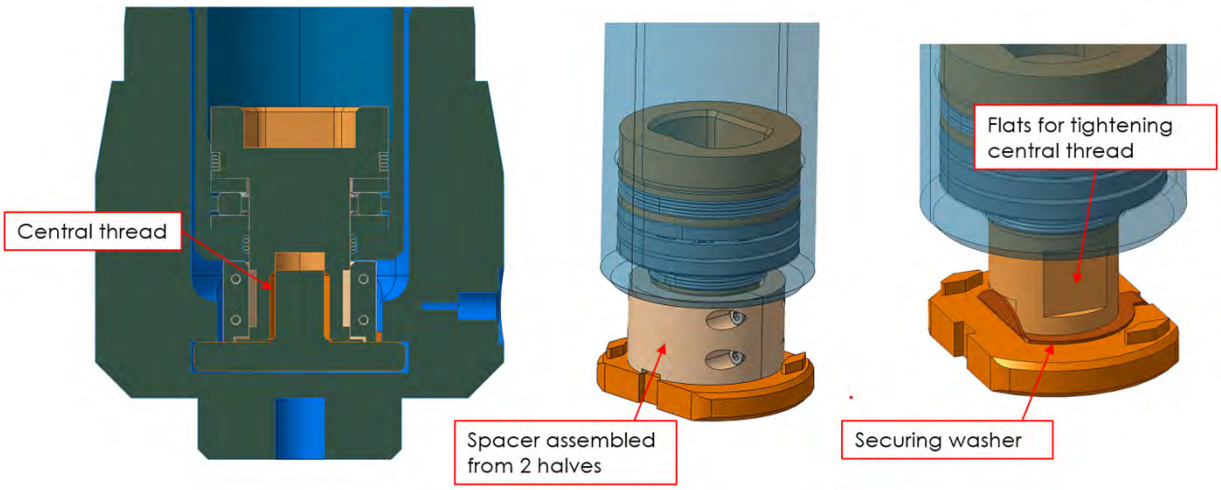

Figure 52 Alternative concept for the locking mechanism of the MCPT

As discussed above, the MCPT will have to rotate with the MCAMT and MCWT. This means that the rotation drive can be integrated into the Tool or the MCPT as well. In the former case the MCPT mechanism should only exert the pulling force, and the top flange (see Figure 50 and Figure 53) of the cylinder should be mounted on bearings to be able to rotate with respect to the pulling mechanism. In the latter case, the MCPT mechanism should pull and rotate the cylinder flange at the same time.

The allocated space for the MCPT mechanism is shown in the figure below. This is only and approximation, the occupied space will naturally depend on if the drive mechanism will be

needed or not. If it will be part of the MCPT, it can claim more space at the expense of the MCWT and MCAMT, which will then be simpler.

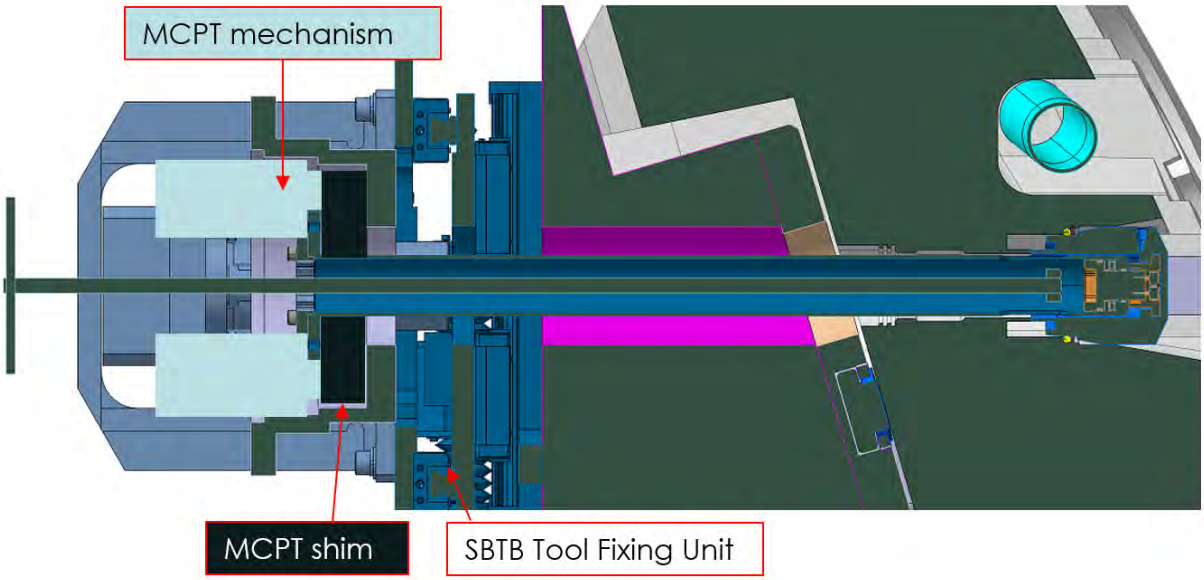

Figure 53 MCPT shown in the context of SB #8 with the SBTB structure

The advantage of using the MCPT as a carrier for the MCAMT and MCWT is that only the MCPT will have to have shims, the tools attached to it do not. Since the axial alignment of the MCAMT and MCWT with the MC joint will have to be done via their internal longitudinal drive, the Z linear guide of the Tool Base TFU will be redundant in this case. However, it can help to compensate for the different MC depths, thus reducing the number of MCPT shim variants.

Process and interface description

The MCPT will be brought into the vessel via the TSR (see section 4.2.20). Then, an operator on the IVTC Nacelle will use the zero G arm to pick the MCPT from the TSR and move it to the SBTB/15NDTB already mounted on the target SB. The MCPT will be locked to the TFU of the Tool Base via clamps.

The SBTB, already presented in section 4.2.5 should be used in this case as well. It can be seen in Table 8 that only the 8th and 18th Shield Block rows have Monoaxial Connectors (and 15ND SBs, but they have so special shape that they need a dedicated Tool Base (discussed later)).

SUPPLY

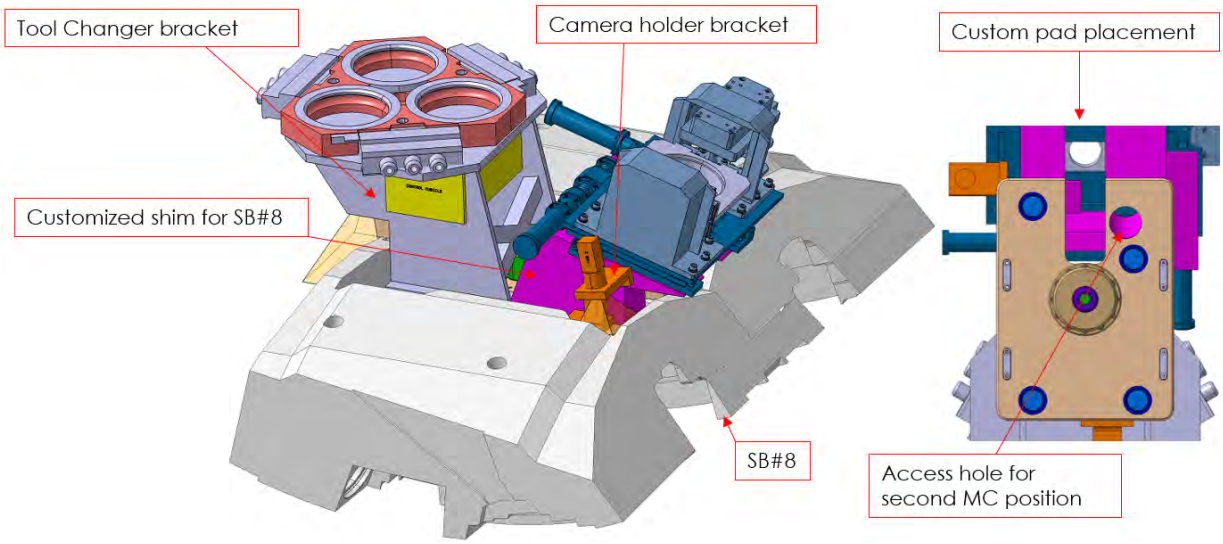

Figure 54 SBTB configured for SB#8

In the figure above it is shown how the SBTB needs to be reconfigured to be compatible with MC welding. In the case of SB#8, one of the two MC access holes does not coincide with the SB front face symmetry plane (left MC in Figure 49). For the MC with an offset, another TFU connection position must be used on the top of the shim (bottom right textbox in Figure 54).

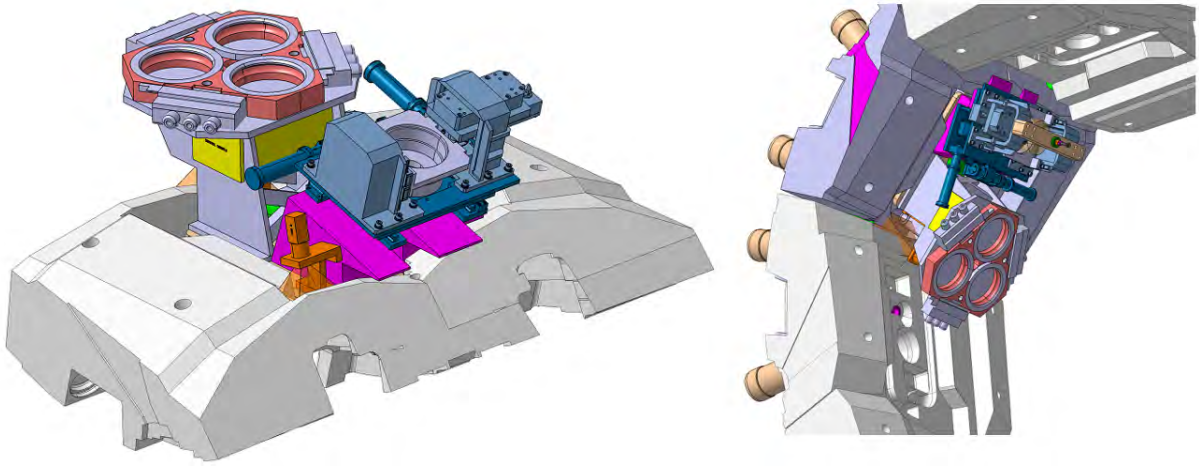

Figure 55 TFU placed in an offset position on the shim to align with the out-of-line MC position on SB#8

Due to the need for reconfiguration between the two MCs, the welding of these SB rows (and the 3 irregular 15ND blocks) must be done in two turns, welding one of the MCs in one turn for all SBs in the target row, reconfigure and then weld the second MC in another turn.

The 15NDTB does not have a concept design yet, but it should have a TFU mechanism similar to that of the SBTB and the functions should be the same. On the 15ND the MC joint positions are located much deeper (see Figure 78) from the surface of the Shield Block and the 15NDTB design will have to take this into account. Nonetheless, it is possible to make the MCPT (and MCAMT, MCWT) even longer, if needed.

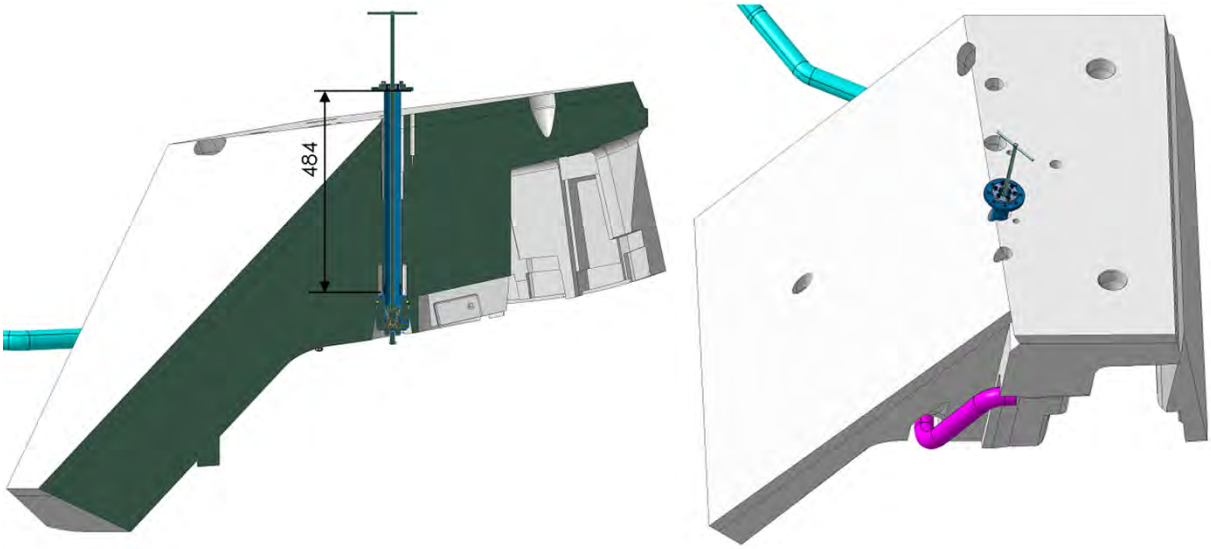

Figure 56 MCPT shown in the context of SB #8 with the SBTB structure

4.2.9 Monoaxial Connector Alignment Measurement Tool

The aim of the Monoaxial Connector Alignment Measurement Tool (MCAMT) is to align the TFU of the SBTB (and 15NTB) to be coaxial with the SB hole for the pipe welding to be performed correctly.

Design description

The main functions and corresponding sub-systems of the MCAMT are as follows:

- **Tool head**
  - Enclosure for axial drive mechanism
  - Interface with MCPT
  - Cable management
  - Zero G arm interface
- **Displacement measurement**
  - Measurement of misalignment between SB hole and MC

The MCAMT concept design can be seen in the figures below.

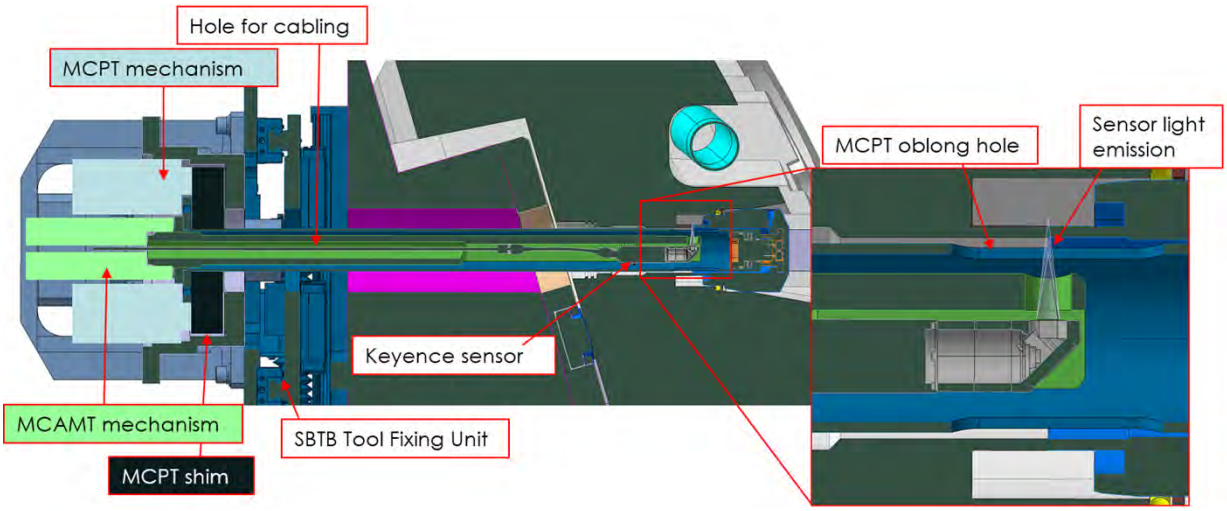

Figure 57 MACMT concept design

SUPPLY

It can be seen in the figure above that the MCAMT does not need a shim, because it is mounted on the MCPT, which is already aligned axially with the MC joint before pulling. The MCAMT should be able move axially with respect to the MCPT to perform scans and to axially align itself with the pipe joint. MCAMT should be equipped with a mechanism to centre itself relative to the inner cylinder of MCPT.

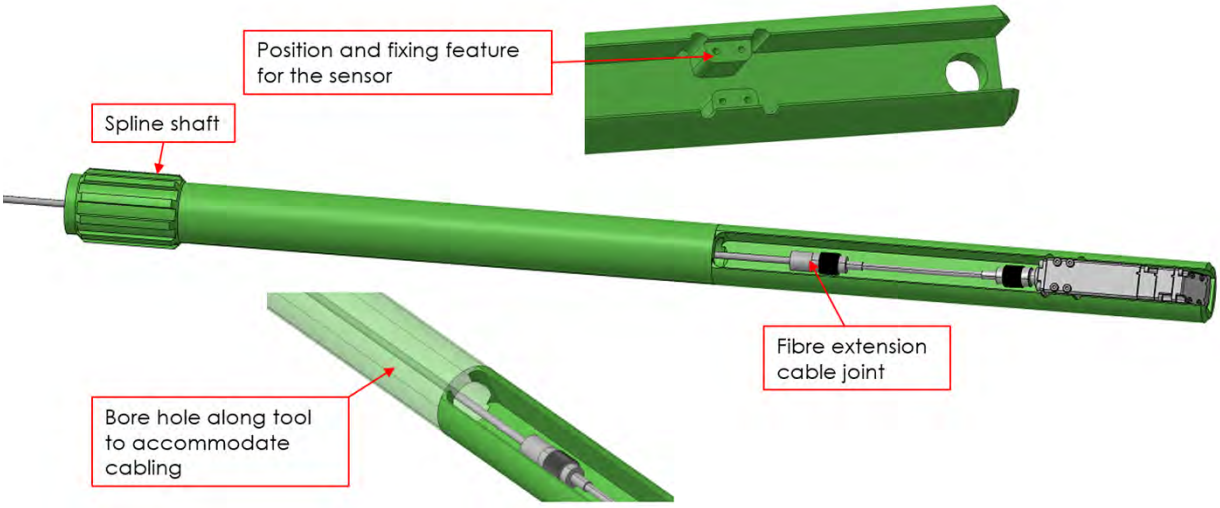

Figure 58 MCAMT head unit concept

Process and interface description

The MCAMT will be brought into the vessel via the TSR (see section 4.2.20). Then, an operator on the IVTC Nacelle will use the zero G arm to pick the MCAMT from the TSR and move it to the SBTB/15NDTB already mounted on the target SB. The MCAMT will be locked to the MCPT tangentially but will be able to move axially with respect to it.

The alignment of the TFU should be done in the following order:

1. Coarse alignment of the TFU with respect to the SB access hole by operator visual check. Note: The SBTB TFU could have engravings for the expected X and Y positions of the MC axis to be aligned with indicators fixed to the TFU XY table.
2. Assembly of MCPT onto the Tool Base TFU (select appropriate shim between the two).
3. Engagement of the MCPT locking mechanism with the MC bottom slot with the use of the lock engagement key. Remove lock engagement key. (see Figure 50)
4. Insertion and fixing of MCAMT into the MCPT.
5. Scan SB hole to check radial misalignment.
6. Fine alignment of the TFU to match MCAMT axis with SB hole axis.
7. Lower MCAMT head via its internal axial drive to be aligned with the MC pipe joint.
8. Apply pulling force with the MCPT to pull the MC into position.
9. Scan MC-SB pipe joint area to check residual gap and step.
10. If the misalignment is acceptable, remove MCAMT and continue with MCWT to perform the welding. If the misalignment is not acceptable, repeat from step 9 with a larger pulling force.

4.2.10 Monoaxial Connector Welding Tool

The Monoaxial Connector Welding Tool (MCWT) will be used to connect MCs to the SB pipe stub. The environment can be seen in the figure below for SB#8.

SUPPLY

Design description

The main functions and corresponding sub-systems of the MCWT are as follows:

- **Tool head**
  - Enclosure for axial drive mechanism
  - Interface with MCPT
  - Cable management
  - Zero G arm interface
- **Welding torch mechanism**
  - Full penetration weld between SB pipe stub and Monoaxial Connector (ID ø43.72 mm, thickness 2.5 mm)
  - AVC mechanism
  - Feed of inert gas to welding area

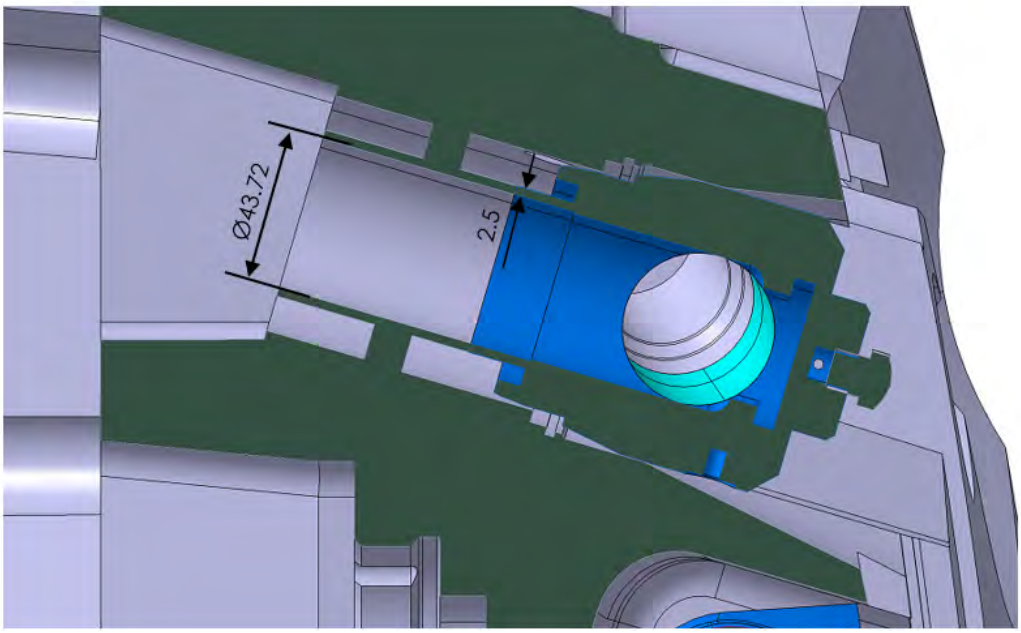

Figure 59 The joint to be connected is an ID 43.72 pipe with 2.5 mm thickness

The TFUs might be different for the FW and SB Tool Bases but the welding tool tip design and the functions of the tool should be the same, except for the pipe alignment mechanism, which is needed to align the FW pipe with the Flow Separator, but not needed for the MC.

Thus, the MCWT should be a welding torch that has the AVC system integrated into either the welding head or the rear mechanism. In the latter case the full length of the MCWT will be moved by the AVC. After the tool is inserted into the MCPT cylinder this AVC system or a separate mechanism should be used to approach the joint with the welding torch.

Since alignment is done by the MCAMT, the MCWT will not have a displacement sensor.

The concept design for the MCWT is shown in the figure below.

SUPPLY

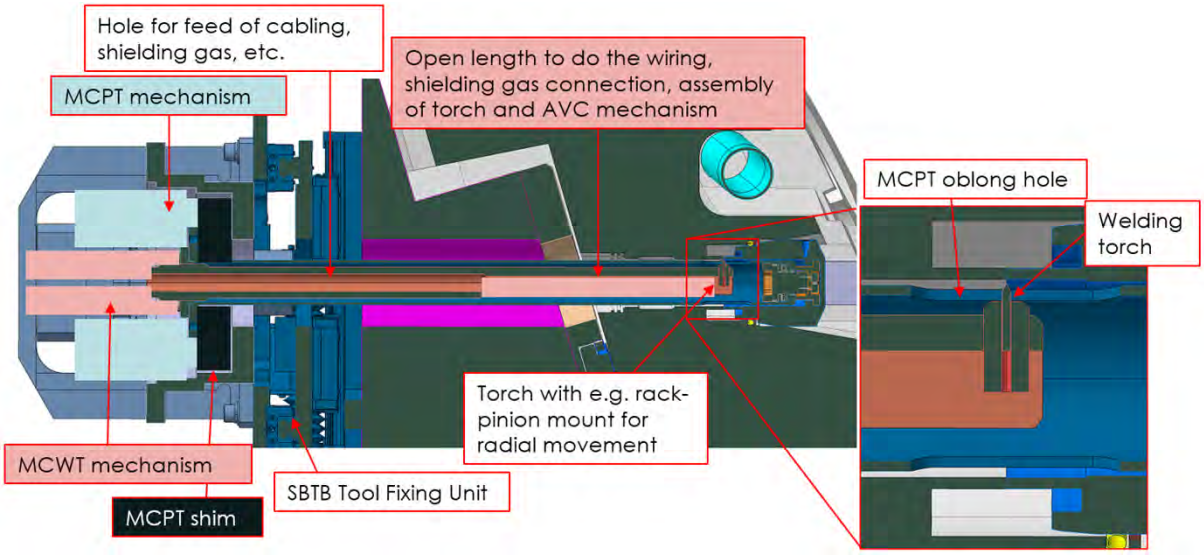

Figure 60 MCWT concept

The MCWT design should allow welding to be performed in 3 different depths, due to possible rewelding operations (see Figure 61). However, the MCWT does not necessarily need an axial drive, because no active axial adjustment is foreseen during the welding operations. So, there are 2 options to cope with the 3 different welding positions:

1. The MCWT has axial drive, and axial position is adjusted for the 1st, 2nd or 3rd weld.
2. There is a shim between the MCWT and MCPT. The shim variations are:
    1. 14 mm for 1st weld
    2. 7 mm for 2nd weld
    3. No shim for 3rd weld.

Process and interface description

The MCWT will be brought into the vessel via the TSR (see section 4.2.20). Then, an operator on the IVTC Nacelle will use the zero G arm to pick the MCWT from the TSR and move it to the SBTB/15NDTB already mounted on the target SB. The MCWT will be locked to the MCPT tangentially but will be able to move axially with respect to it.

4.2.11 Monoaxial Connector Cutting Tool

The aim of the Monoaxial Connector Cutting Tool (MCCT) is to cut the welded joint between the MC and the SB pipe (see Figure 59). For this, a double swage cutter should be used.

Design description

The main functions and corresponding sub-systems of the MCCT are as follows:

- **Tool head**
    - Enclosure for rotation and swage cutter feed mechanisms
    - Interface with SBTB and 15NDTB TFU
    - Cable management
    - Zero G arm interface
- **Tool alignment mechanism**
    - Align the Tool axis with the SB hole
- **Cutter**
    - Double swage cutter
    - Radial feed mechanism
- ***Accessory: Pipe Facing Tool***

SUPPLY

In case of a failed weld, the MC-SB connection is to be cut on the MC side, which means that the MC pipe stub will become shorter with each cut.

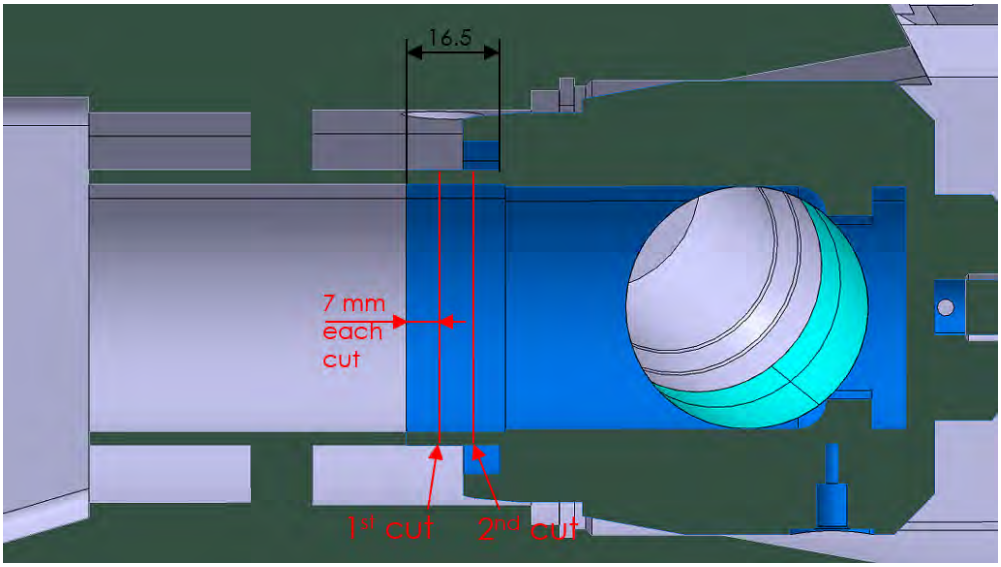

Figure 61 Monoaxial Connector cutting positions

The MC shortening must be compensated on the SB side. For a repair, the pipe section with the failed weld will be cut off and a new pipe section will be welded in its place. This new pipe will have to be longer by the cut off length.

It is very important that the cut surface of the MC should be appropriate for rewelding operations. As the swage cutters do not provide a clean-cut profile, a Pipe Facing Tool should be used after the Shield Block is removed (see Figure 48). The Pipe Facing Tool used for CC and MC can be the same tool if its adjustment range allows.

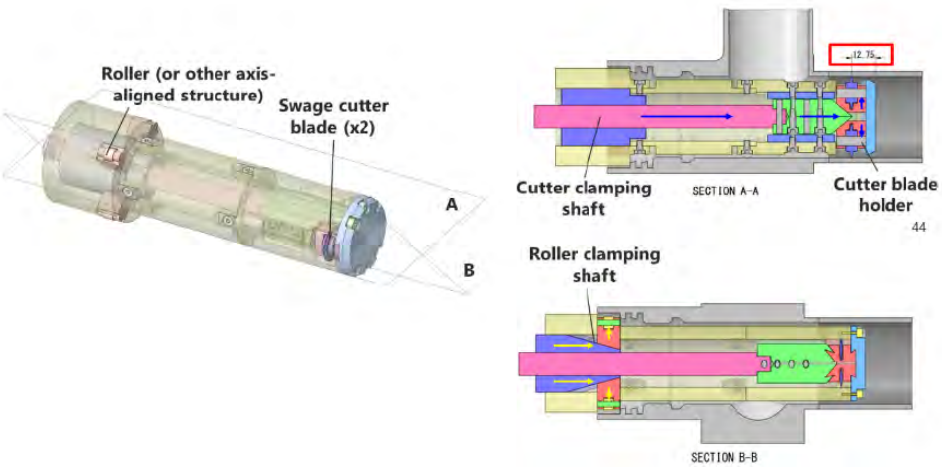

Figure 62 Proposal for FW pipe cutting that should be adopted for MC cutting

The proposal shown in the figure above must be modified to match the MC case, but the functions should be similar:

- Cutters actuated by a central shaft.
- Rollers providing centralization and rigidity during cutting. However, in the MC case, this roller mechanism should use the SB pipe for centralization, so the size of the structure needs to be reduced.

SUPPLY

Due to the fact that the alignment is done by the MCAMT, the MCCT will not have a displacement sensor. Axial positioning of the swage blades should rely on precision manufacturing and dimensional inspection of the Tools, meaning that because of the accurately known distances between the TFU and cutters (for MCCT) and also the TFU and displacement sensor (for MCAMT), the cutters will already be in position when installed after the MCAMT.

Process and interface description

The MCCT will be brought into the vessel via the TSR (see section 4.2.20). Then, an operator on the IVTC Nacelle will use the zero G arm to pick the MCCT from the TSR and move it to the SBTB already mounted on the target SB. The MCCT will be locked to the TFU of the SBTB via clamps.

When the cutting operation is complete, the tool and then the Tool Base are taken away. The Shield Block is then removed from the vessel via the BMTS.

After this, when the area around the MC is free, an operator can come with the Nacelle to use the Pipe Facing Tool to produce a proper cut surface for rewelding operations. The operator will set temporary protections beforehand, to avoid spreading swarf and will vacuum out everything afterwards.

4.2.12 End Cap Handling Tool

The purpose of the End Cap Handling Tool is to handle ECs.

Design description

The main functions and corresponding sub-systems of the ECHT are as follows:

- **Handle**
- **Key**
  - 17 mm hexagon key
  - Passive Holding System

On each Shield Block with Monoaxial Connectors, there is one (row #8 and row #18) or two (15ND, 15NDA and 15NDB) SB access hole(s) that must be capped.

The sole purpose of the End Cap Handling Tool (ECHT) is to pick an End Cap and engage it with the thread in the SB access hole for one of the MCs.

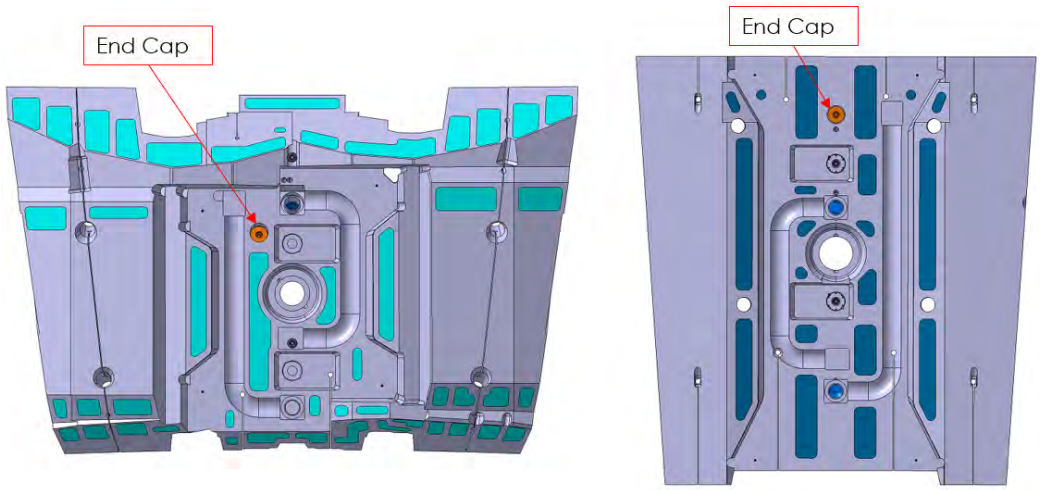

Figure 63 MC access holes with End Caps on SB #8 and #18

SUPPLY

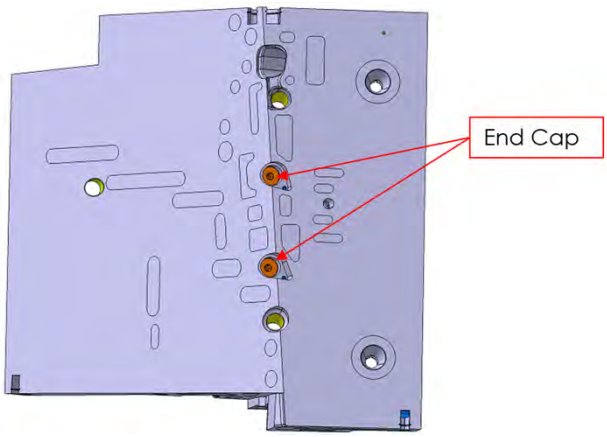

Figure 64 MC access holes with End Caps on SB #15ND (15NDA and 15NDB are similar)

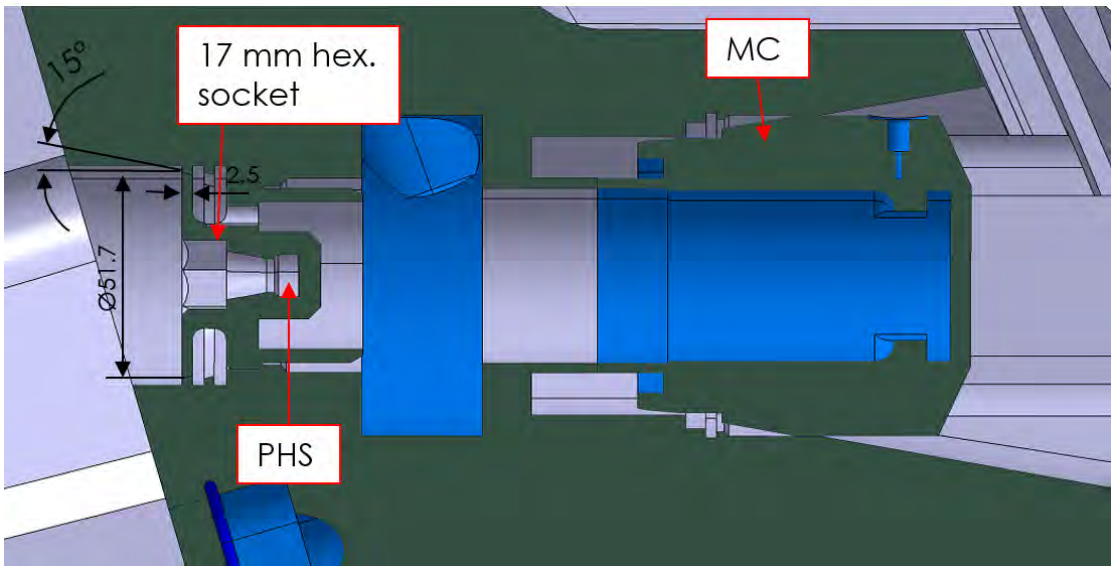

Figure 65 End Cap and joint geometry

The relevant dimensions of the End Cap can be seen in the figure above. The thickness to be welded is, again, 2.5 mm, but the other dimensions of the joint are unique to the End Cap.

The ECHT should be a fully manual tool, a holding stick, with the 17 mm hexagon socket and PHS on one end and a handling feature on the other end.

Process and interface description

An operator should be able to insert the PHS male side at the tip of the ECHT into the PHS socket on an End Cap, thus grabbing one from a tray or box to be located on the Nacelle. Using the ECHT the operator will then position the EC into the access hole on the target SB and screw it into the SB hole thread until the visible surface of the EC is completely flush with the SB shoulder. After reaching the final position and feeling resistance, the EC should by tightened by hand (around 15Nm), to temporarily secure it to the SB before welding operations.

In order not to lose alignment with the MC hole, the SBTB (or 15NDTB) has to stay in place for EC welding (and cutting possibly), which means that the ECHT will have to reach down the TFU to reach position.

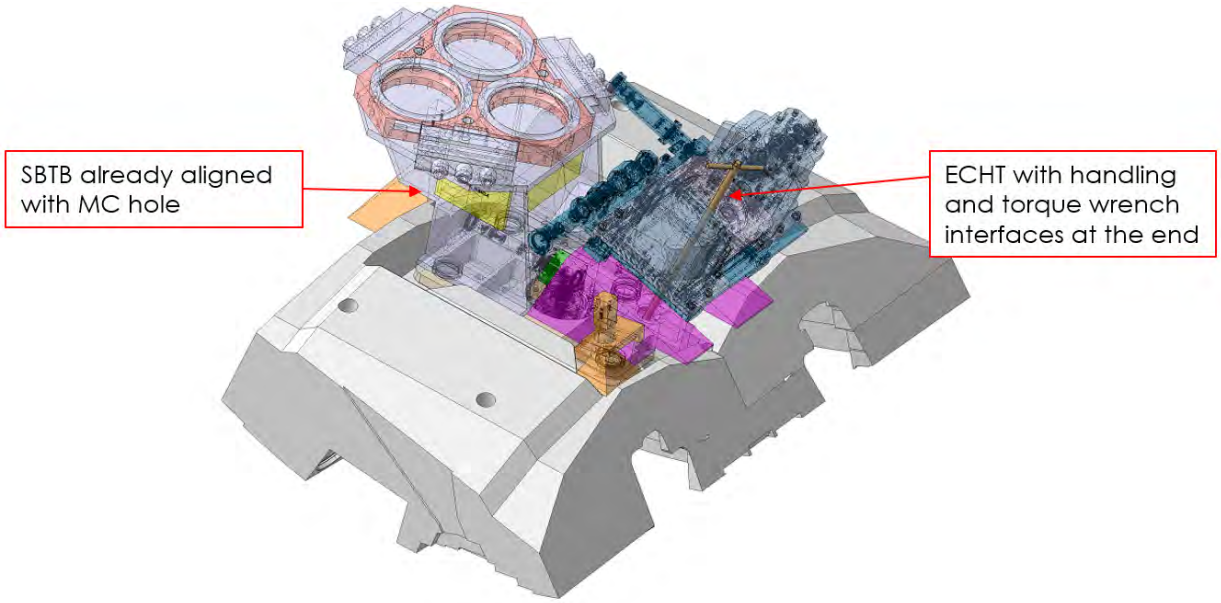

Figure 66 ECHT reaching down through the SBTB TFU (already aligned with the MC of SB#8) to engage with the End Cap

By keeping alignment, time and effort can be saved between MC and EC welding. This means that MC and EC welding (and all related activities (pulling, EC placement, cutting)) are linked by alignment and should be done sequentially.

4.2.13 End Cap Welding Tool

The End Cap Welding Tool (ECWT) will be used to connect ECs to the SB lips.

Design description

The main functions and corresponding sub-systems of the ECWT are as follows:

- **Tool head**
  - Enclosure for rotation mechanism
  - Interface with SBTB and 15NDTB TFU
  - Cable management
  - Zero G arm interface
- **Welding torch mechanism**
  - Full penetration weld between SB lip and End Cap (thickness 2.5 mm)
  - AVC mechanism
  - Feed of inert gas to welding area

Given that after welding the MC, the SBTB (or 15NDTB) TFU is already aligned with the SB hole, there is no alignment to be done before the End Cap Welding Tool (ECWT) is attached.

The counterbore of the SB is 55 mm in diameter, the outer diameter of the EC is ~51.7 mm. This poses relatively tight space constraints to the design of the ECWT. The torch cannot be perpendicular to the EC face, it must be tilted at an angle, to provide space for the fixation of the tungsten electrode and sufficient volume around the tungsten to be filled with shielding gas, etc. A cross-section of this area of the SB is given in the figure below with relevant dimensions.

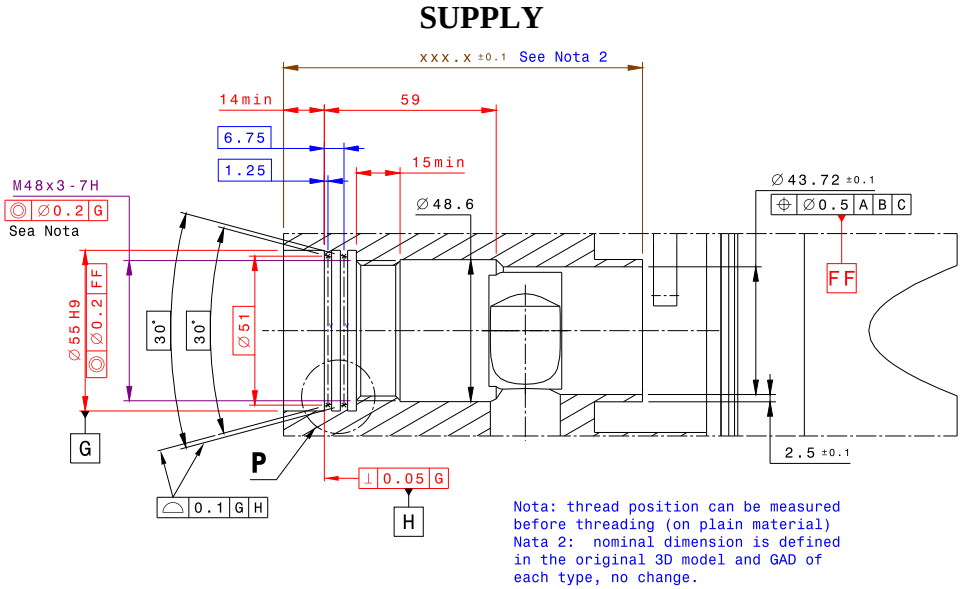

Figure 67 Cross-section of the SB at the End Cap position [12]

To determine the maximum outer diameter of the tool, the followings must be considered:

- The diam. 55 mm section between the lips of subsequent ECs
- Using the MCAMT, a coaxiality of 0.1 mm can be set between the TFU and the SB hole

To provide additional centring for the tool, the PHS socket may be used, by having a centring rod at the tip. However, this is not expected to be needed, because the tool alignment provided by the MCAMT beforehand is expected to be fine enough for the built-in AVC system of the ECWT to cope with slight residual misalignments.

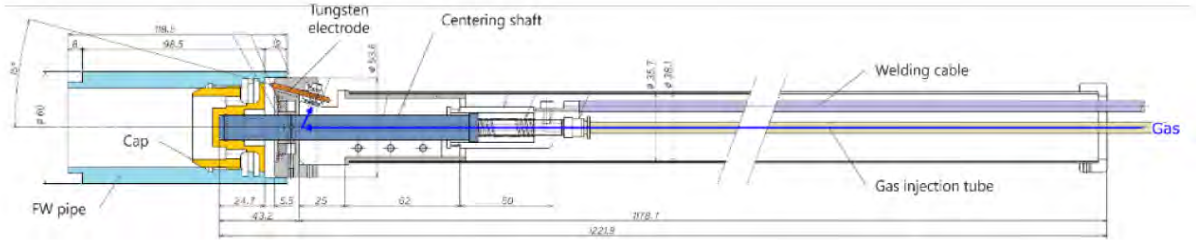

Figure 68 Overview of the ECWT concept (showing an old SB design, where the hole diameter is the same between the lips and at the opening)

For axial positioning, either the centring shaft or the front face of the End Cap can be used, which means that the TFU should gently be lowered until a hard stop and then fixed. This will result in a precisely aligned welding torch.

Process and interface description

The ECWT will be brought into the vessel via the TSR (see section 4.2.20). Then, an operator on the IVTC Nacelle will use the zero G arm to pick the ECWT from the TSR and move it to the SBTB already mounted on the target SB. The ECWT will be locked to the TFU of the SBTB via clamps.

4.2.14 End Cap Cutting Tool

The aim of the End Cap Cutting Tool (ECCT) is to cut the welded joint between the EC and the SB lip. For this, a hole saw cutter should be used.

Design description

SUPPLY

The main functions and corresponding sub-systems of the ECCT are as follows:

- **Tool head**
  - Enclosure for rotation and hole saw feed mechanisms
  - Interface with SBTB and 15NDTB TFU
  - Cable management
  - Zero G arm interface
- **Tool alignment mechanism**
  - Align the Tool axis with the EC
- **Cutter**
  - Hole saw
  - Axial feed mechanism

In the case of a failed weld, the End Cap must be removed by cutting. The End Cap Cutting Tool (ECCT) should use a hole saw to make the cut. In this case, this seems to be the only possibility, due to the tight space between the weld and the SB opening.

The hole saw will inherently generate swarf, which needs to be removed by a vacuum suction hose integrated into the ECCT design.

Regarding the hole saw, its outer diameter should be at least 52 mm, to be able to pass through the created hole with a new EC easily. It should be as big in diameter as possible but should keep a small stand-off distance from the inside the diameter of the counterbore.

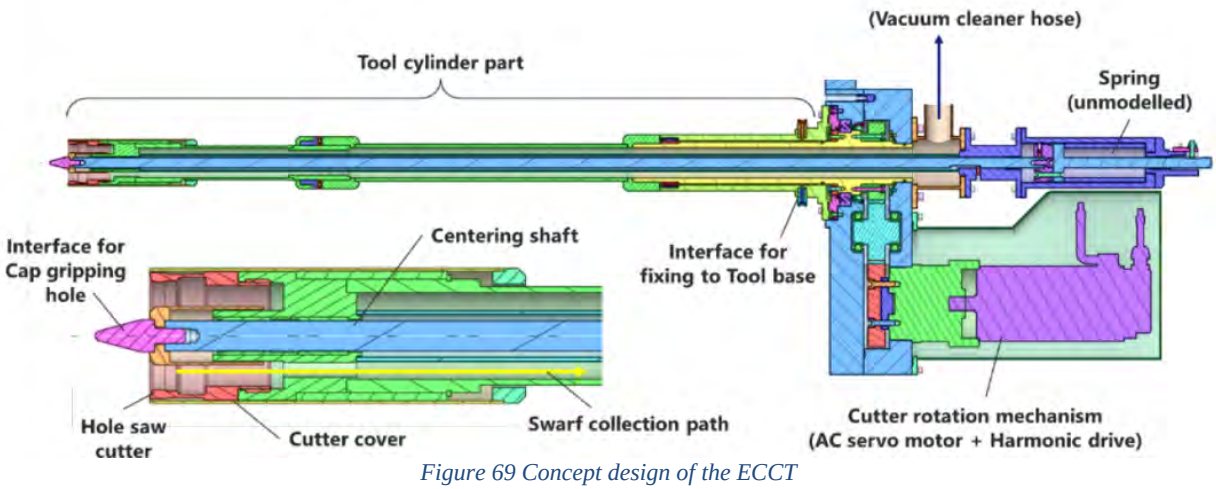

Figure 69 Concept design of the ECCT

The hole saw outside diameter has a lower and an upper limitation. The lower is that the created hole should be big enough for a second EC to pass through. The upper limitation has to do with the fact that the hole diameter between subsequent EC lips is smaller than that of the front counterbore (see Figure 67). So, the hole saw of the ECCT will need to be smaller than this diameter, taking into account the runout of the saw with respect to the SB hole axis.

<u>Process and interface description</u>

The ECCT will be brought into the vessel via the TSR (see section 4.2.20). Then, an operator on the IVTC Nacelle will use the zero G arm to pick the ECCT from the TSR and move it to the SBTB already mounted on the target SB. The ECCT will be locked to the TFU of the SBTB via clamps.

4.2.15 15ND Gripper

The 15NDG is an End Effector to grasp and transport the 15ND.

SUPPLY

Design Description

The main functions and corresponding sub-systems of the 15NDG are as follows:

- **Two Gripping Cones** to securely grasp the 15ND consists of
  - One gripping cone with rigid connection to the Gripper Frame and the other cone having floating feature.
  - M24 bolts and bolt drive mechanism to tighten bolts to the 15ND threads
- **Static Pressing pads** to contact the surface of 15ND to support moment load
- **ESB Wrench Unit** to tighten ESB consisting of:
  - A motorized extension mechanism to insert the wrench into the ESB socket after the 15ND is placed on the Flexible Cartridges.
  - A motorized wrench rotation mechanism to apply torque to the ESB
  - Maraging steel wrenches with high yield strength to apply torque having PHS.
- **Gripper Frame** as the structural housing of the device and equipped with
  - Two cameras for robot vision
  - Tool Changer interface
  - Embedded controller

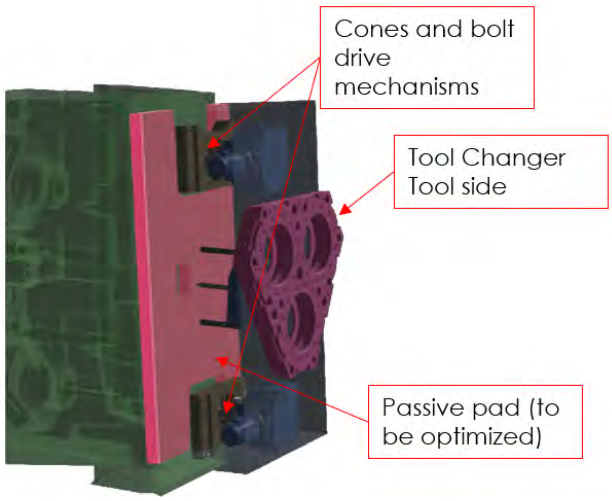

Figure 70 15NDG concept

Having two fixed conical fits with the Shield Block would overconstrain the interface and perfect connection at both cones would be impossible to achieve. Thus, one of the cones should have floating features that allow slight axial and radial play in order to have perfect connection at both cone positions.

The 15NDG interface requires a measurement to accommodate slight misalignment. Although the nominal hole positions of the 15ND series modules are identical, the three 15ND modules may have slight variations of hole position/surface profile within the design tolerances. If both cones are rigidly fixed, the interface would become over-constrained, making perfect alignment difficult to achieve due to these slight variations. Such misalignment could lead to slight indentation and increased friction, obstructing the cones from being engaged/disengaged.

To mitigate this risk, at least one of (A) or (B) needs to be implemented. Also, (C) should be implemented for recovery. The primary option is (A) Floating Cone, and others are back-up option in case that the option (A) does not work well.

SUPPLY

(A) Floating Cone (Making one of the cones adjustable to the slight hole variation):

A floating cone has slight axial and radial play with respect to the 15NDG frame, as illustrated below. It remains floating prior to engagement with the 15ND module but becomes fixed between the frame and the 15ND body after bolt tightening, thereby functioning as a moment-supporting element.

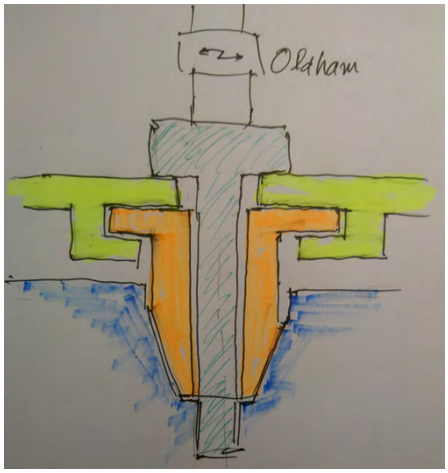

Figure 71 One of the 15NDG cones that allows slight axial and radial self-alignment

(B) Pre-adjusted Cone (Making one of the cones adjustable to the slight hole variation):

Based on dimensional measurements of the actual fabricated 15ND modules, adjustments can be made either by applying shim plates or by fabricating individually fitted cone blocks to precisely match the measured geometry.

In this option, the cone is fixed prior to 15NDG deployment into the VV.

(C) Threaded hole feature + pressing bolt (Adding alternative recovery function):

By implementing threaded hole feature + pressing bolt, the 15NDG can push against the 15ND surface if the cone becomes stuck in the hole. The hole and bolt need to be accessible for the operator and activated manually during a recovery scenario.

The 15NDG should also comprise an embedded wrench mechanism to apply temporary torque on the one ESB (see Figure 73). If technically feasible, the 15NDG should apply final torque on the ESB.

Since the 15ND series has the deepest ESB access hole (over 400mm), a long wrench would be needed. To satisfy the Storage box size and general EE capacity constraints, it is allowed to use extension wrench for 15ND/15NDG case.

The 15NDG design should take into account the manual bolting of the side FCB (as explained later), because it must be performed whilst it is still attached to the 15ND block via the BAT, meaning that:

- 15NDG parts should not obstruct the bolting wrench access to the side FCB (see Figure 76)
- The Tool Changer Tool Side on the 15NDG should be positioned so that when the BAT is attached, it leaves sufficient space for the Nacelle to come from the left side (see Figure 72).

The 15NDG only needs an embedded ESB wrench mechanism and does not need to have a embedded temporary fixation function for the FCB(s), but it is necessary to consider that the operator can accessed from the left side by Nacelle for manually bolting the FCB.

SUPPLY

Process and Interface Description

Due to the irregular shape of the 15ND Shield Blocks (3 in total), they cannot be handled by the SBG. The gripping features of the 15ND Gripper (15NDG) are not the same as those of the SBG. There is still an ESB to be torqued but on the 15ND blocks there is no Central Bolt Insert.

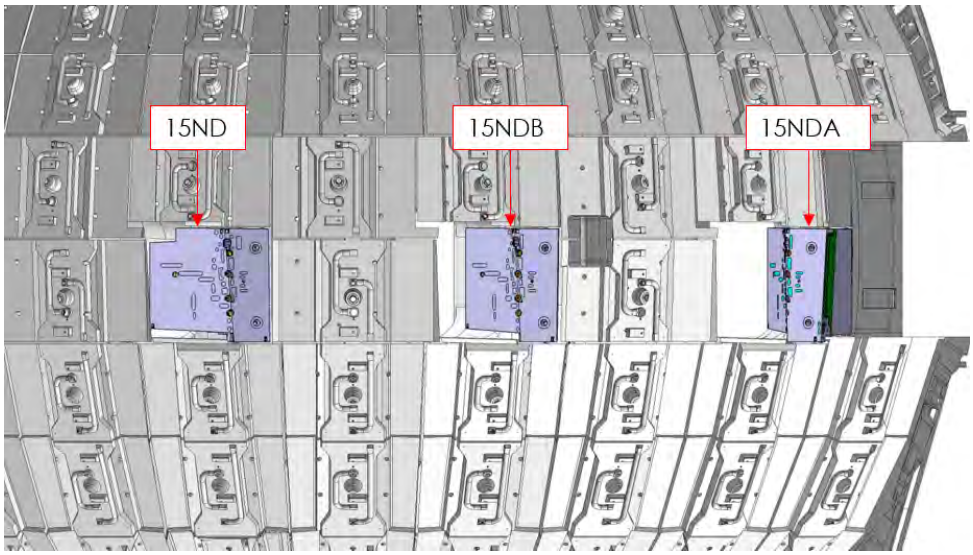

Figure 72 15ND Shield Blocks in Sectors #2 and #3

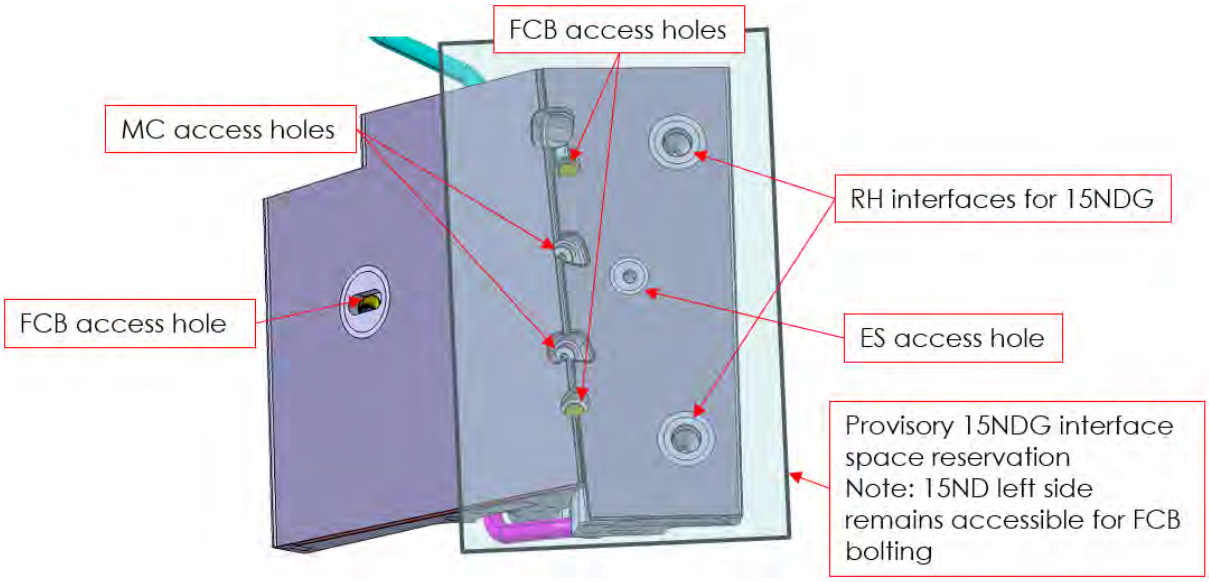

Figure 73 Interfaces of the 15ND Shield Blocks; 15NDG space reservation shown in transparent blue

The interfaces on 15ND Shield Blocks for RH operations can be seen in the figure above. The 15NDG should make use of the conical RH interfaces located on the front surface.

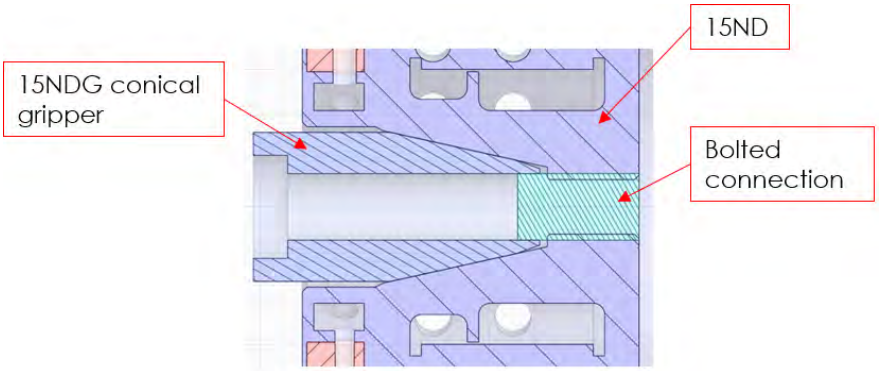

Figure 74 Cross-section of the RH interface concept of the 15ND block

SUPPLY

The worst-case posture for the 15ND handling is when it is held in a horizontal position (see Figure 75) and the moment load on the General End Effector roller axis is the highest. This posture should be avoided, if possible, but the loads resulting from this should be taken into account when designing the 15NDG.

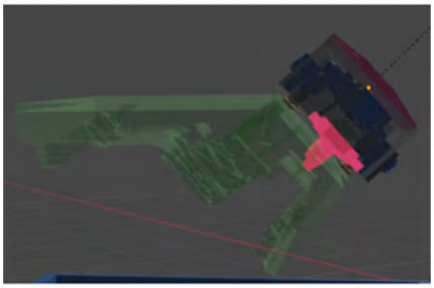

Figure 75 15NDG worst-case handling posture of the 15NDG

As can be seen in Figure 76, the ESB is slightly outside the triangle of the 3 FCBs, which means that the temporary fixation (ESB torquing) can potentially result in an instable state of the SB. Because of this, it is necessary to bolt the FCB that is farthest from the gripping cones (highlighted with red circle in Figure 76). This is a simple bolting operation with a preliminary torque applied on the bolt (~50 Nm) performed by an operator on the Nacelle. For this, the bolting tool accessory of the FBT might be used (see section 4.2.2).

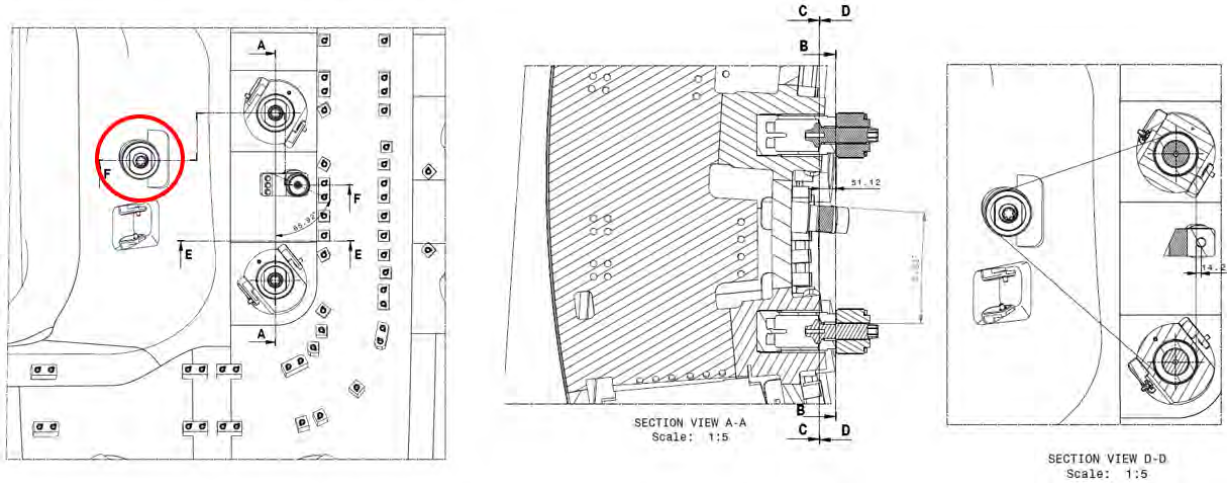

Figure 76 15ND ES position and alignment with respect to the 3 FCBs; red circle shows the FCB to be bolted by hand

4.2.16 15ND Tool Base

The 15ND Tool Base (15ND TB) is an End Effector, which provides a rigid interface between the 15ND and the Tools used for pipe welding and cutting operations.

<u>Design Description</u>

The main functions and corresponding sub-systems of the 15ND TB are as follows:

- **Tool Fixing Unit (TFU)** Provides alignment functionality for Tools
  - XY table for radial alignment
  - Z linear guide for axial positioning can be implemented either in the TFU or Tool
- **Base Plate** equipped with
  - Two Gripping cones lock the 15ND TB to the 15ND
  - Static Pads similar to 15NDG
  - Tool Changer interface to allow modular tool exchange

SUPPLY

- Two cameras for robot vision
- Embedded controller

Process and Interface Description

After the 15ND block is placed and necessary bolts are temporary torqued, the following operations need to be performed on the 15NDs:

1. Final torquing of the 3 FCB bolts.
2. Welding of MC joints
3. Welding of End Caps

All these operations should be performed on the same 15ND Tool Base (15NDTB). In the 15ND case, using the same Tool Base is possible because the number of repetitions is very low, and the access hole alignments are always the same.

For connection to the 15ND, the 15 NDTB should replicate the features of the 15NDG (cones with embedded bolts and motors, passive pads) shown in Figure 70 and Figure 71.

To torque the FCBs of the 15ND blocks, no alignment function is needed because the orientation of the FCB axes is known and there is only 3. For torquing, the same torque multiplier + motor combination can be used as in the case of the FBT (see section 4.2.2), only with different wrench lengths (possibly). On the 15NDTB baseplate 3 mounting positions (aligned with the axis of the FCBs) for this torquing mechanism should be created, with the same locking and reaction features as at the tip of the FBT arm.

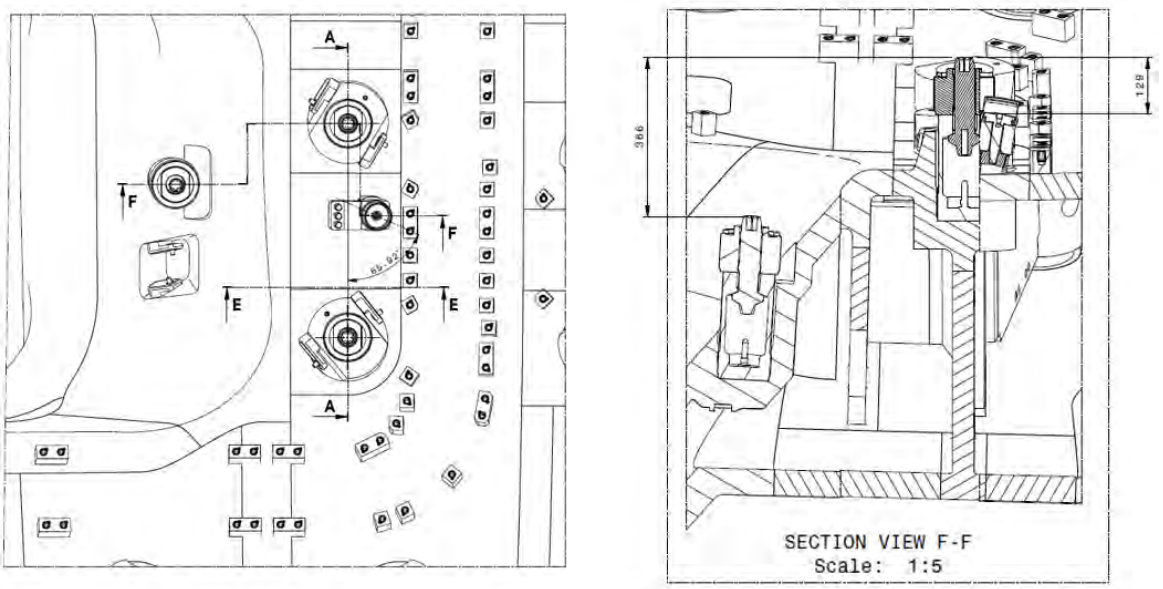

Figure 77 Height difference between FCB and ESB at 15ND

As can be seen in Figure 77 above, there is a considerable height difference between the two FCBs accessed from the front 15ND face (see Figure 73) and the one on the slanted face on the side. This height difference must be taken into account when planning the FCB torquing process. A wrench extension may need to be fixed to the FBT wrench to reach the side FCB socket.

Like the SBTB, the 15NDTB should have a Tool Fixing Unit, which could be the same that is used on the SBTB. A precisely manufactured shim module should provide angular alignment between the target SB hole and TFU axes. As the 2 MCs of this SB are parallel to each other, one shim design should be sufficient for all 15ND MCs. TFU XY table should be able to align with both MC holes without reconfiguration e.g. by extending the linear guides.

SUPPLY

The tools to be used, and to be made compatible with the 15NDTB TFU are: MCAMT, MCPT, MCWT, MCCT, ECWT, ECCT.

The operations are the same as for regular SBs, but it must be noted that in the 15ND case, the MC joint position is quite deep down the access hole, compared to row #8 or #18. Thus, dedicated extensions may be needed for some of the tools listed above. This is to be assessed after the 15NDTB (with TFU) has been designed and it is clear what is the difference in the distance between the TFU mounting position and MC joint in the 15NDTB and SBTB case.

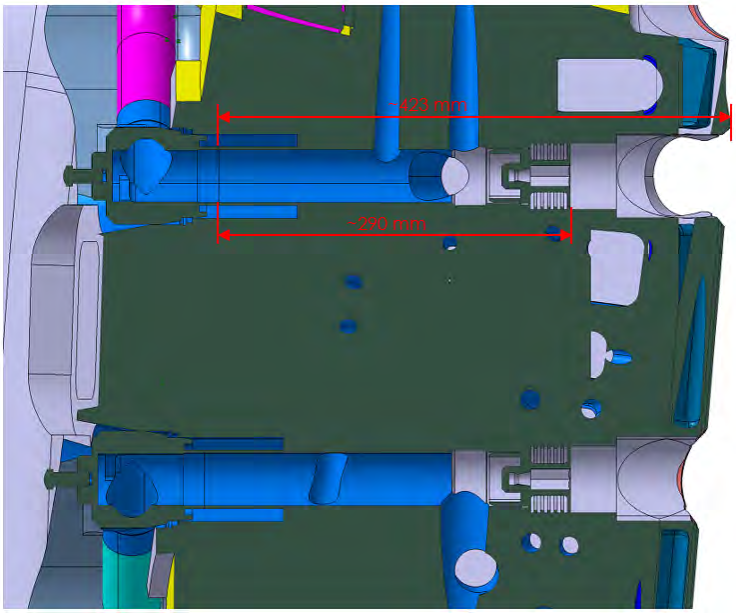

Figure 78 MC joint depth in the context of 15ND Shield Blocks

Like in the SBTB case, a compact vacuum cleaner should be located somewhere on the 15NDTB, with current feed from the Embedded Controller. From the vacuum cleaner, a suction hose should be connected to the cutting tool socket on its stationary part. The vacuum cleaner should be detachable from the 15NDTB by hand, because it is only needed for cutting tools.

4.2.17First Wall Gripper

The aim of the First Wall Gripper (FWG) is to pick First Wall or Temporary First Wall units from the BMTS and transfer them to their target location in-vessel. The FWG should also apply temporary torque to the Central Bolt of the FW.

From all the tools in the list of Table 1, the First Wall Gripper design has the highest maturity at the time of writing of this document. This section is mostly a presentation of the already defined FWG features. However, some aspects of the FWG still need to be refined, these aspects are also defined here.

Design description

The main functions of the FWG:

- Gripping finger interfaces to lock the FWG to the gripping holes of the TFW
- Active pad units on the sides of the gripping fingers to apply a preload on the gripping hooks, a preload that is large enough to secure the TFW firmly in any orientation within the vessel
- Linear sensor to monitor pad spring deflection.
- Linear drive units to move the gripping fingers towards and away from the central wrench in order to adjust the finger positions to the target TFW.

SUPPLY

- Central wrench mechanism with embedded
  - automatic extension mechanism to engage with the socket of the TFW Central Bolt after the TFW has been placed onto the target SB by the BAT
  - torquing mechanism that can screw the Central Bolt into the insert of the SB until it is fully engaged and apply temporary torque
- Two cameras for robot vision.
- Tool Changer Tool Side at the back of the FWG for connection to the BAT.
- Embedded controller

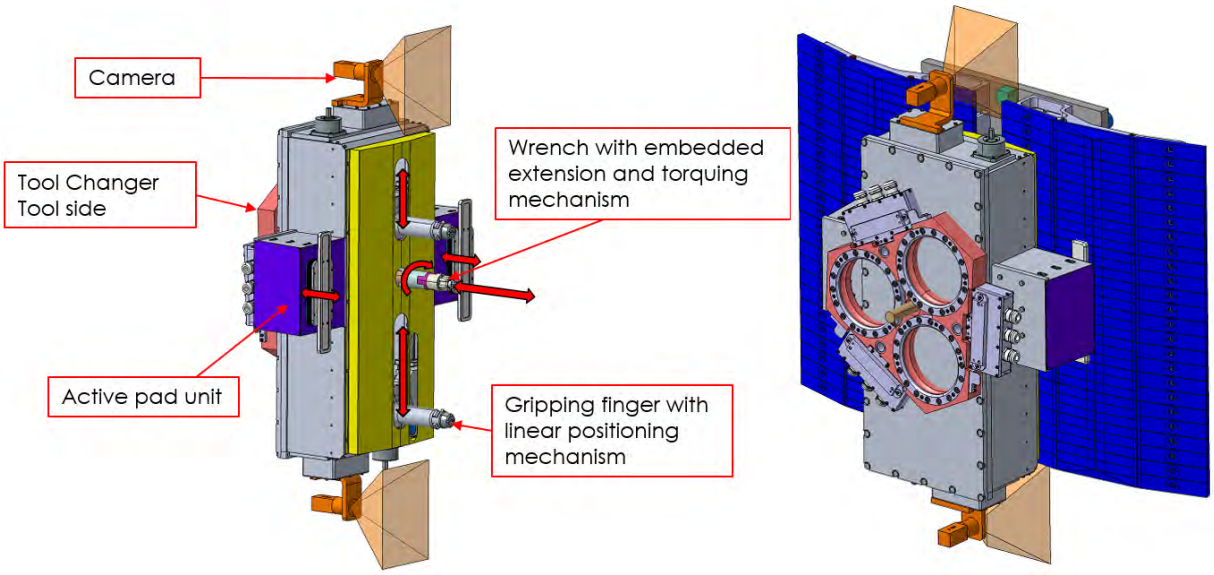

Figure 79 First Wall Gripper main functions

Process and interface description

As shown in the figure above, the wrench goes through the FWG structure, and the Tool Changer Tool side. In order to determine what is the length of the wrench section that sticks out, the internal structure of the FWG needs to be looked at.

	MANDATORY		CONDITION				1	2	3	4	5	6	7	8	9	10	11C	11ECH	11S	12	13	14	15	16	17	18
First Walls	Angle between GH & Coaxial	1	no requirement (info)				0°	0°	0°	0°	0°	1.1°	26.8°	16.3°	4.4°	5.8°	1.8°	1.8	1.8°	5.9°	5.2°	6.7°	4.4°	5.9°	4.2°	0°
	Distance between GH & Central Bolt Head	2	102	136	169	213	136	136	136	136	136	136	136	109	136	136	169	169	169	169	169	213	213	169	169	102
	Distance between T-ridge	3	contacting pads				752	752	479.9	479.9	479.9	759.2	721.3	761	881.5	854	514.5	514.5	514.5	579	616.6	492.2	497.2	609.4	609.8	490.6
	Distance between GH on FW	4			300	686	493	493	493	493	493	493.5	450	581	619	572	544	509	579	449	523	535	546	575	492	519.5
	Distance central bolt ES **UP**	5		150	290	396	342	342	342	342	342	329.4	300	150	290	195	294	215	174	296	360	385	150	255	153	179.5
	Distance central bolt ES **DOWN**	6		150	290	396	151	151	151	151	151	163.9	150	233	329	377	250	294	205	153	167	150	396	320	339	340
	space available behind GH	7			63		58.3	58.3	58	58	58	58	83	73	77	58	58	58	58	58	58	63	58	60.5	58	58

Dimension "2" will drive the requirement for FWG wrench stroke length:

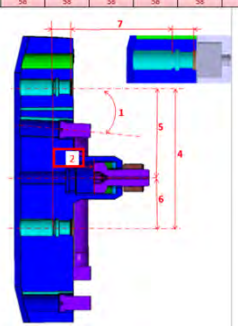

Figure 80 SB#15 will require the longest extension of the FWG wrench [2]

The longest wrench stroke is needed for FW15, where the distance between the gripping interface and the Central Bolt socket is the biggest (213 mm) in the fully bolted position. The CB wrench length needs to be less than the available height of 665 mm when FWG is placed in the Storage Box with tips of the gripping fingers and the CB wrench aligned.

SUPPLY

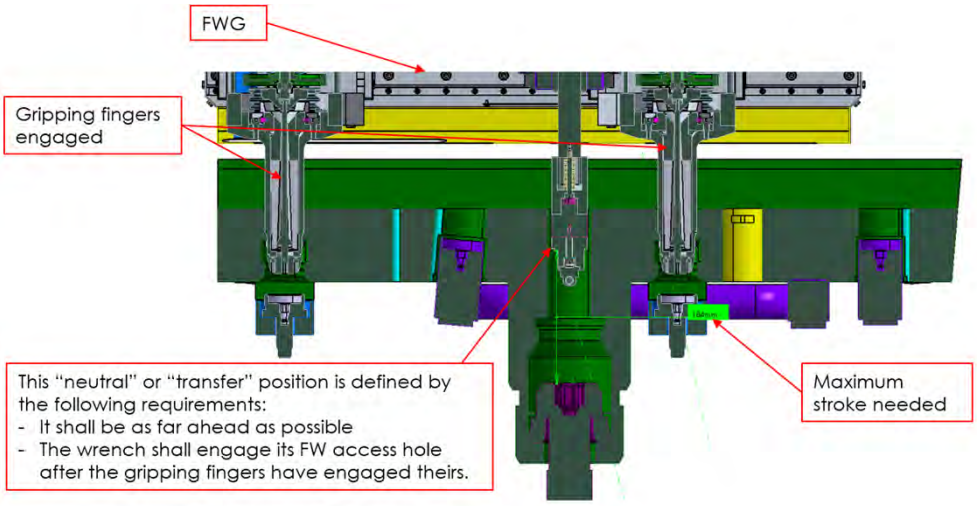

Figure 81 FWG engaged with SB#15;defining the wrench extension stroke

The stroke of the wrench extension should be over 184 mm. If we look into the internal structure of the FWG, we can see how much of the wrench length will actually stick out of the FWG body.

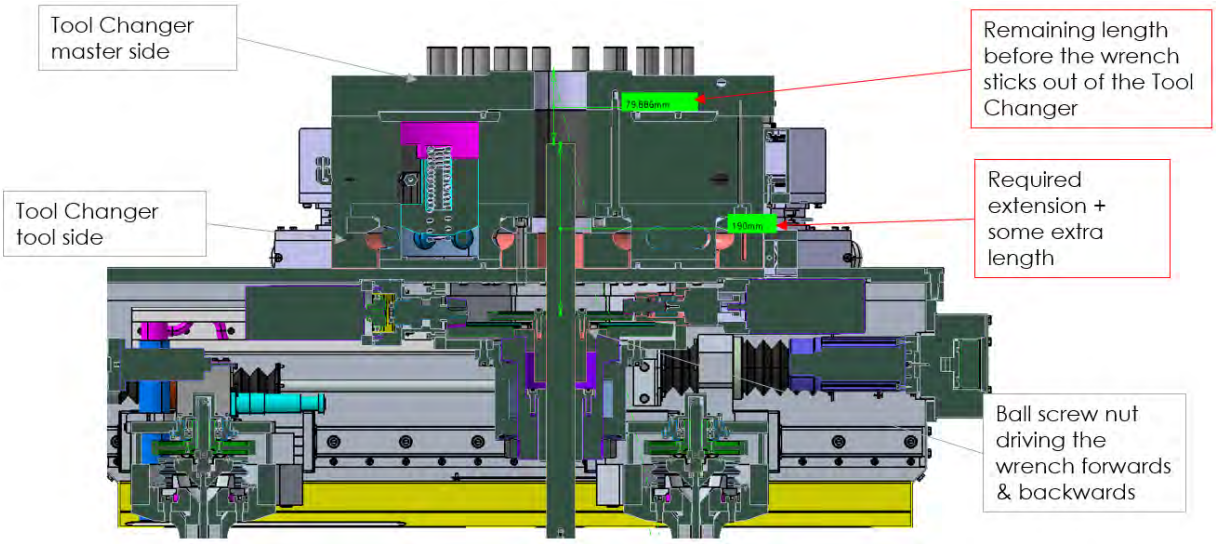

Figure 82 Defining the FWG wrench rear extension length

With 190 mm wrench extension length, the Tool Changer master side completely covers the extension even in the full retracted position.

4.2.18 First Wall Central Bolt Torquing End Effector

The aim of the First Wall Central Bolt Torquing End Effector (FWCBT) is to apply the final torque to the CB of the TFW.

The FWCBT is an End Effector, because it should not have a fix connection to the TFW but should remain connected to the BAT during operation.

<u>Design description</u>

The main functions and corresponding sub-systems the FWCBT are as follows:

- **Wrench unit** consists of
  - Maraging steel wrench with high yield strength to withstand high torque
  - Spherical seat to allow tilting wrench
  - Spring for engaging the wrench to the Central Bolt socket

SUPPLY

  - Interface feature for Rotation drive unit
- **Rotation drive mechanism** to apply torque on the wrench unit
  - Motor + harmonic drive + Gears for torque amplification.
  - Wrench compliance mechanism to accommodate the bolt misalignment
  - Torque meter to measure the torque applied to the wrench.
- **Base Plate** equipped with
  - Two pins to engage FW gripping holes for receiving the reaction torque.
  - Adjusting feature for pins lateral position
  - Passive pads to contact with the surface of the TFW
  - Tool Changer Tool Side for connection to the BAT General EE.
  - Interface feature for connection the FWCBT to FW.
  - Two cameras for robot vision.
  - Embedded controller
  - Interface features to connect to BMTS mounts

There is an existing FWCBT concept design, which will have to be modified and the required modifications to match the requirements in ([1]) are listed in this section.

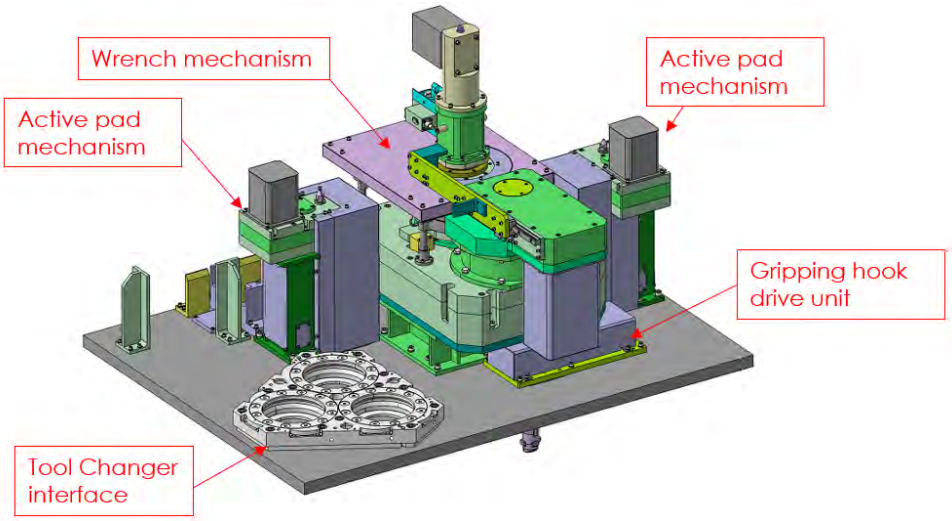

Figure 83 Overview of the existing FWCBT concept (1/2)

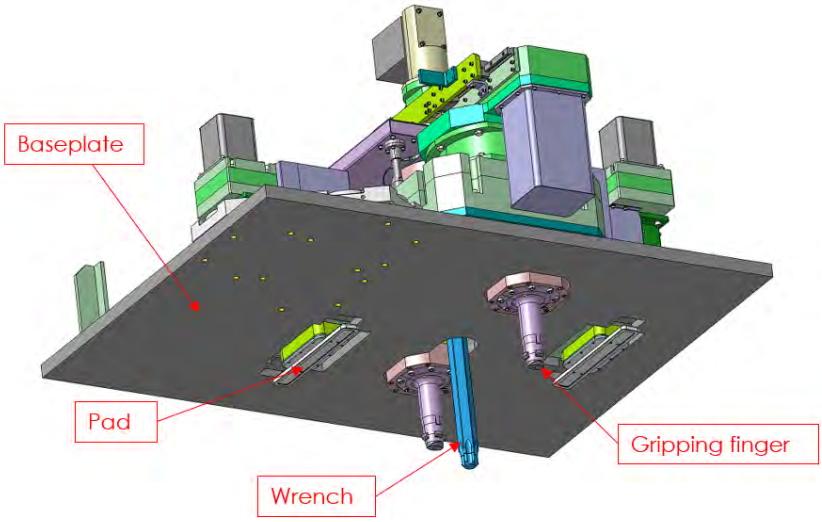

Figure 84 Overview of the existing FWCBT concept (2/2)

SUPPLY

The modules of the existing FWCBT concept and the required modifications are listed below.

Wrench mechanism:

Due to the space constraints of the IVDT Storage Box (max. 665 mm height), the wrench itself has to be inserted into the wrench mechanism manually, when the FWCBT is already in position on the target TFW, and the BAT is in a frozen position. This means that the wrench mechanism must be open from the top for the wrench insertion.

Passive pad mechanism:

This should be replaced with a passive spring-loaded pressing pad.

Gripping hook drive unit:

This can be removed altogether. Since the BAT will carry the FWCBT all the time, no active gripping hook interface is required.

Tool Changer interface:

This interface should be placed in line with the two gripping interfaces. When positioned onto the target TFW, the Tool Changer and BAT should not block the lateral sides of the FWCBT for easy access with the wrench.

Pad:

Spring loaded passive pads are to be included in the FWCBT to provide a softer interface with the TFW front wall. The interfacing surface could remain the same.

Gripping finger:

To be replaced with 2 pins. The pins should have a guiding feature (e.g. chamfer) at the end for easy engagement with the gripping hole. The basic function of the 2 pins is to transfer the reaction torque to the TFW. When the torque is applied, it is expected that the BAT will rotate slightly, because the torsional load coming from the torque exceeds the brakes' performance. When the pins touch the gripping hole side walls, the reaction torque will be led to the TFW rather than the BAT arm.

Baseplate:

The baseplate should have oblong holes for mounting the static pins to be able to reconfigure the FWCBT for different TFW geometries manually outside the vessel.

Wrench:

Maraging steel wrench, long enough to cover all TFW geometries. The wrench head takes the form of the Straight type shown in [R17] Figure 2-4 (1), with a small clearance to permit minor misalignment with the socket.

In addition to the list above, the FWCBT should include two cameras, one on each end (vertical when aligned with TFW), for robot vision.

Whilst the CBT Tool Base is held by the BAT, the TFW should remain accessible from one side for an operator to install the wrench with the zero G arm.

Especially on the inboard side and for BMs that are farther from the BAT deployment port it is very difficult for the BAT to reach over the Tool Base to the "far side" to the Tool Changer but at the same time leave the "near side" free enough for the operator to approach.

SUPPLY

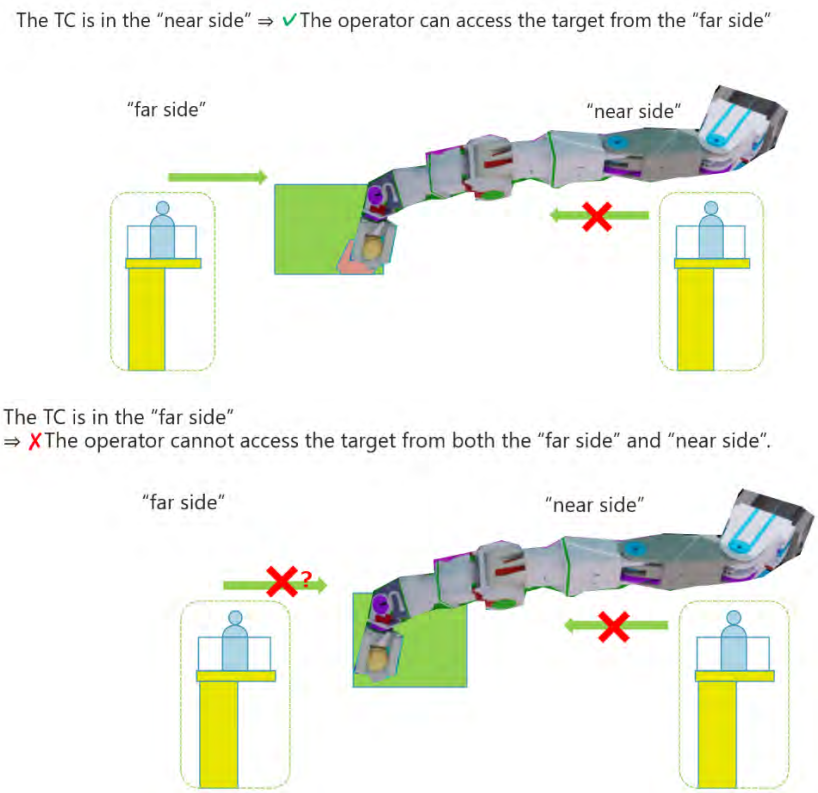

Figure 85 Explanation of "far side" and "near side". Near side: that side of the Tool Base, which is closer to the BAT deployment port; far side of the Tool Base: opposite from the BAT deployment port

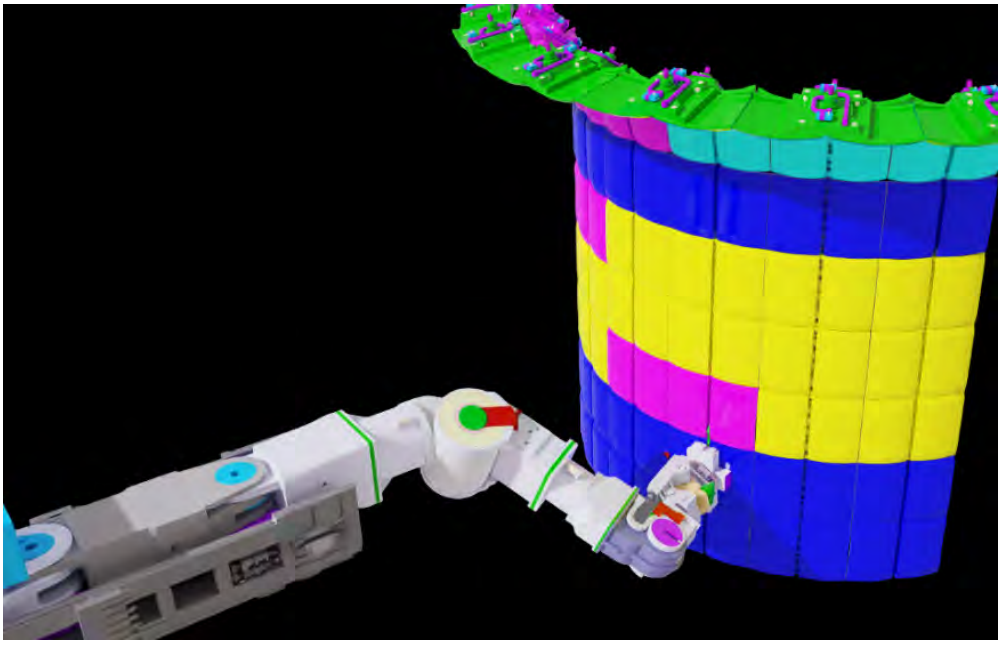

Figure 86 Accessibility of the CBT (replaced with FWG in this kinematic simulation) in row 2 from the side by an operator. In the case of row 2 it is not possible to approach the CBT from the left side.

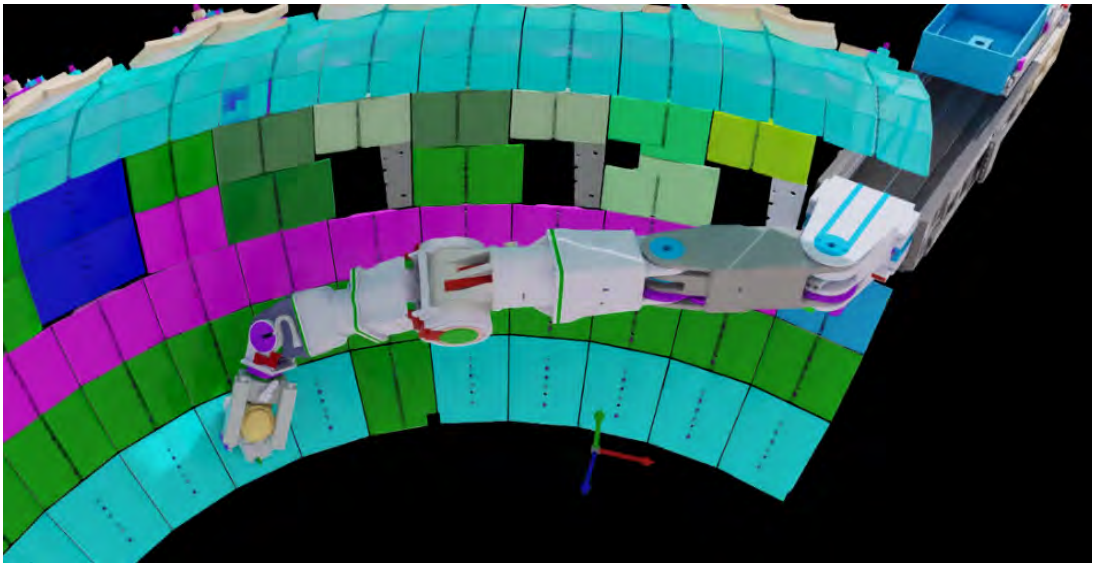

Figure 87 Accessibility of the CBT (replaced with FWG in this kinematic simulation) in row 18 from the side by an operator. In the case of row 18 it is not possible to approach the CBT from the left side.

The CBT was designed so that the Tool Changer is always approachable from the "near side", no matter if the target TFW is left or right from the BAT deployment port. For this, there are 2 possible solutions:

1. The embedded controller and Tool Changer (handled as one unit) can be mounted on both sides of the Tool Base during ex-vessel reconfiguration phase.
2. The CBT can be flipped around the CB axis by 180 degrees, meaning that the 2 pins will change sides and the lower will become the upper and vice versa.

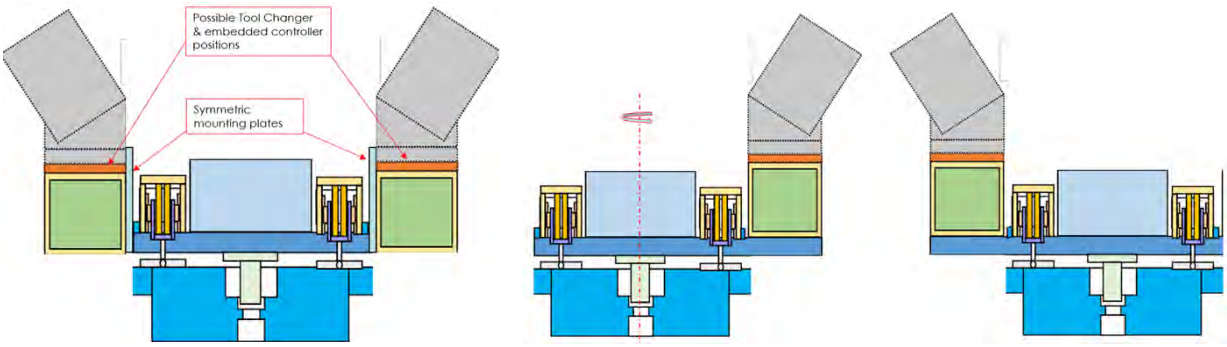

a) b)

Figure 88 CBT design options to leave one side of the Tool Base free for the operator: a) Tool Changer can be mounted on both sides; b) CBT can be flipped

The FWCBT is not going to be fixed to the Temporary First Wall during operation. So, in contrast with other End Effectors, it does not inherently have the necessary interfaces on the opposite side from the Tool Changer Tool Side to be fixed to BMTS mounts connecting it to the Storage Plate. Thus, new interfaces will have to be developed for the transfer configuration on the BMTS.

Process and Interface Description

From Table 9, it can be calculated that the wrench will have to protrude into the FW by a maximum length of ~345 mm. Even though these numbers are applicable to final FWs, not necessarily to TFWs (to be checked), so there could be a variation in the exact values, but this table shows well the magnitude of the wrench extension. With a wrench protrusion of 345 mm, it is hardly possible to fit within the 665 mm high Storage Box if there is a heavy-duty wrench

mechanism on the top of the wrench. Thus, the FWCBT should be designed so that the wrench can be inserted into the mechanism manually by an operator on the Nacelle.

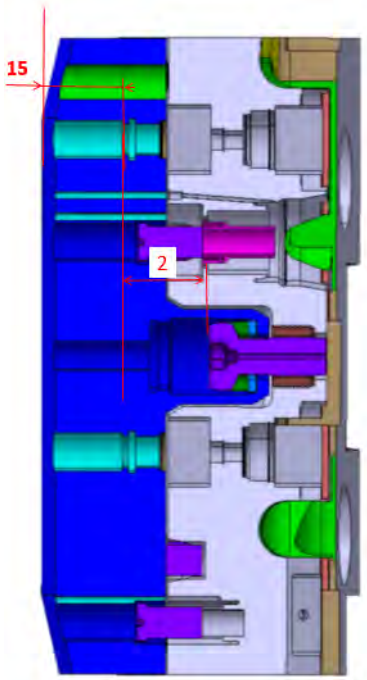

SB	Distance between GH & Central Bolt Head	Distance between T-Ridge Plane and first surface of Gripping Hole	Sum
	2	15	
1	136	133	269
2	136	133	269
3	136	138.5	274.5
4	136	138.5	274.5
5	136	138.5	274.5
6	136	133	269
7	136	133	269
8	109	133	242
9	136	133	269
10	136	133	269
11C	169	98	267
11ECH	169	98	267
11S	169	98	267
12	169	98	267
13	169	98	267
14	213	93	306
15	213	98	311
16	169	98	267
17	169	98	267
18	102	98	200
14 NB	169	93	262
14 NC(V)	213	84.7	297.7
14 ND(V)	213	94	307
14 NDL	213	93.9	306.9
14 NE	213	96.6	309.6
15 NB	169	93	262
15 NC(V)	213	103.7	316.7
15 ND			
15 NDL			
15 NDV			
15 NE	213	103	316
15 ST	213	131.4	344.4
16 ST	152.4	131.4	283.8
18 ANU	102	98	200
18 E	102	98	200

Table 9 Final First Wall Central Bolt and gripping interface depth [2]

4.2.19 Blanket Tooling Supporting Equipment

The aim of the Blanket Tooling Supporting Equipment (BTSE) is to provide services to End Effectors and Tools inside the VV. The services to be provided are:

Power to the embedded controller

- Power to the Embedded Controller of the End Effector
- Power to the TIG welding torch
- Communications (feedback and control)
- Compressed air
- Shielding gas

BTSE consists of following equipment:

- **TSS (Tooling Services Skid)**: A system that provides necessary utilities such as TIG welding power, shielding gas, and compressed air for tooling operations inside the vacuum vessel.
- **UHS (Umbilical Handling System)**: A mechanism that manages and guides the umbilical from the TSS to the tools, ensuring proper routing and support inside the vacuum vessel.

SUPPLY

- **UTC (Umbilical Temporary Clamp)**: A clamp used to secure the umbilical at multiple points inside the vacuum vessel to prevent sagging and ensure proper positioning.

The further detailed design of the UHS and UTC, including component selection, will be provided by IO. The procedure for applying backing gas to the welding points and its technical requirements are subjects of current discussion and are intended to be included in the next revision.

A Tooling Services Skid (TSS) should include TIG welding equipment (power supply and shielding gas) outside the vessel. Only power and communication should be fed to the TSS from the power distribution box on the Port Cell wall of level L1, to which the TSS should be close.

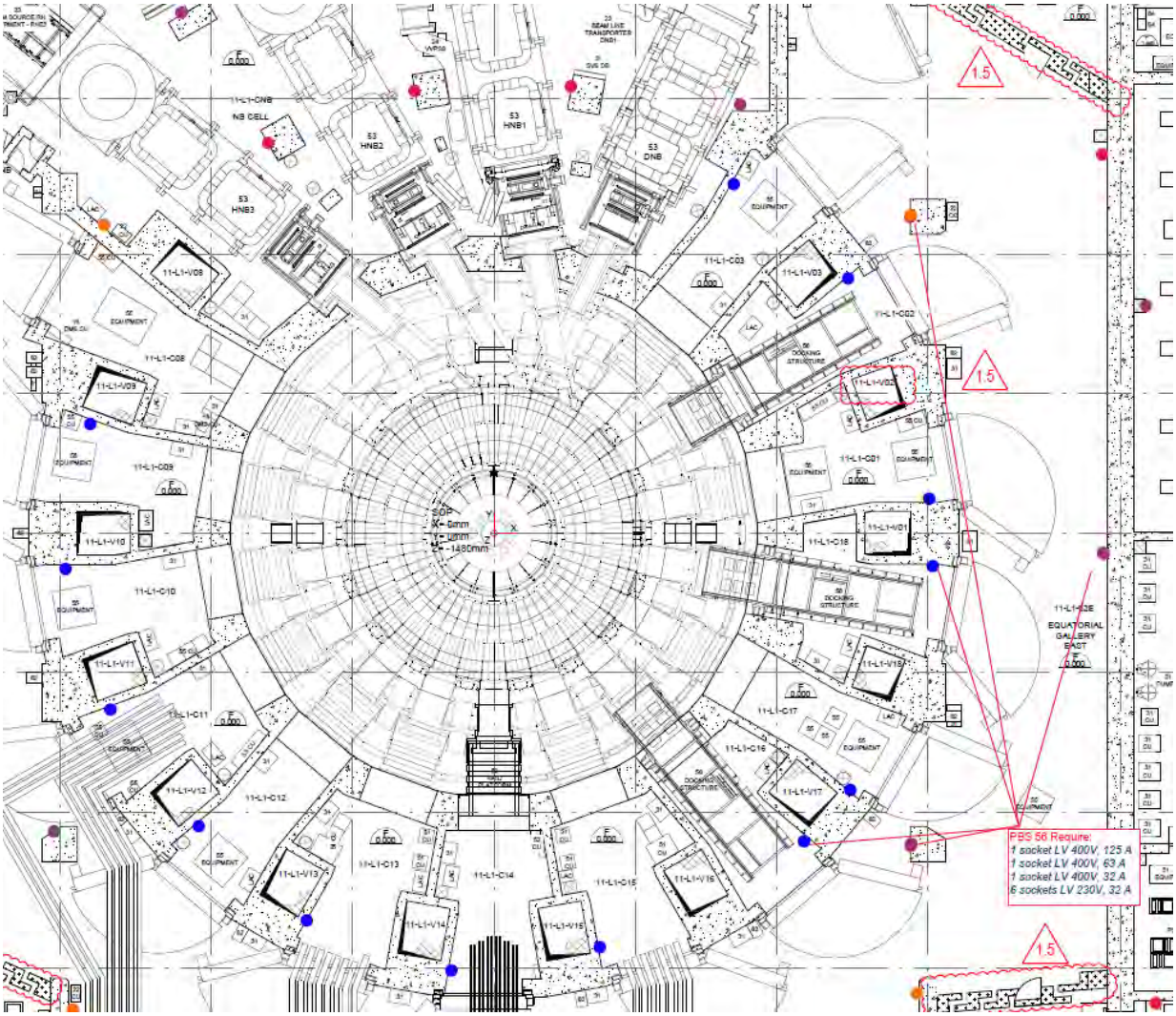

Figure 89 Arrangement of junction boxes for maintenance operations at level L1 [R10]

The junction boxes marked with blue circles have 2 sockets [R11]:

- 1 x 400V 3 Phase Socket 63 A
- 1 x 230V Single Phase Sockets 16/32 A

TSS should be plugged directly into the sockets mentioned above.

The TSS should comprise the following equipment:

- TIG welding power generator
- Shielding gas cylinders
- Gas mixer

SUPPLY

- Air compressor
- Remote controller (see section 4.3)

All supplies should be joined into either a bundle or an umbilical. Henceforth in this section the output of the TSS will be referred to as umbilical.

The umbilical is to be led from the TSS to the Umbilical Handling System (UHS) located inside the Equatorial Port. The UHS is going to be transferred into the EP by the TPTS (and when in position, it will be locked to the pockets on the Port side walls via keys (manually operated).

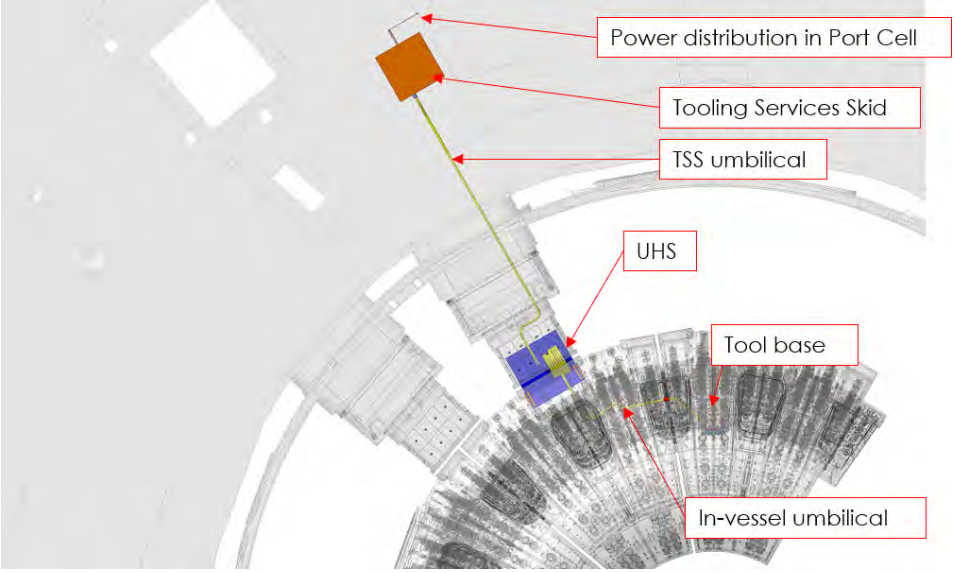

Figure 90 Overview of the Blanket Tooling Supporting Equipment system concept

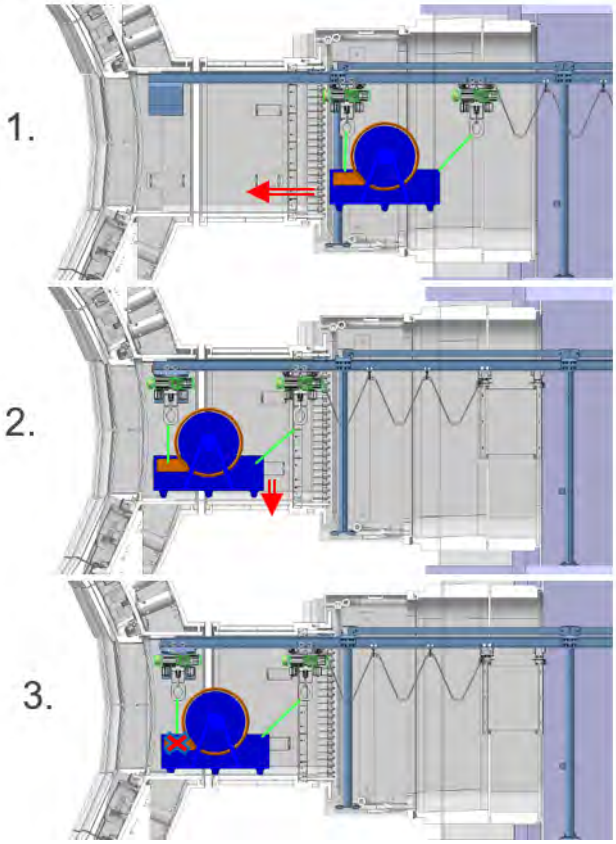

Figure 91 UHS installation by the TPTS: 1. UHS is carried by the TPTS via the Equatorial Port; 2. UHS is lowered into final position; 3. Side keys are engaged, UHS is locked

SUPPLY

The UHS should comprise a coil with 30 m of umbilical/bundle on it. This comes from an estimation, considering a “worst-case” scenario, where the umbilical is led from the EP entrance to the farthest BM position on the inboard side (see Figure 92 below). Based on this estimation, the needed length is ~20 m, but a safety margin of 1.5 is applied.

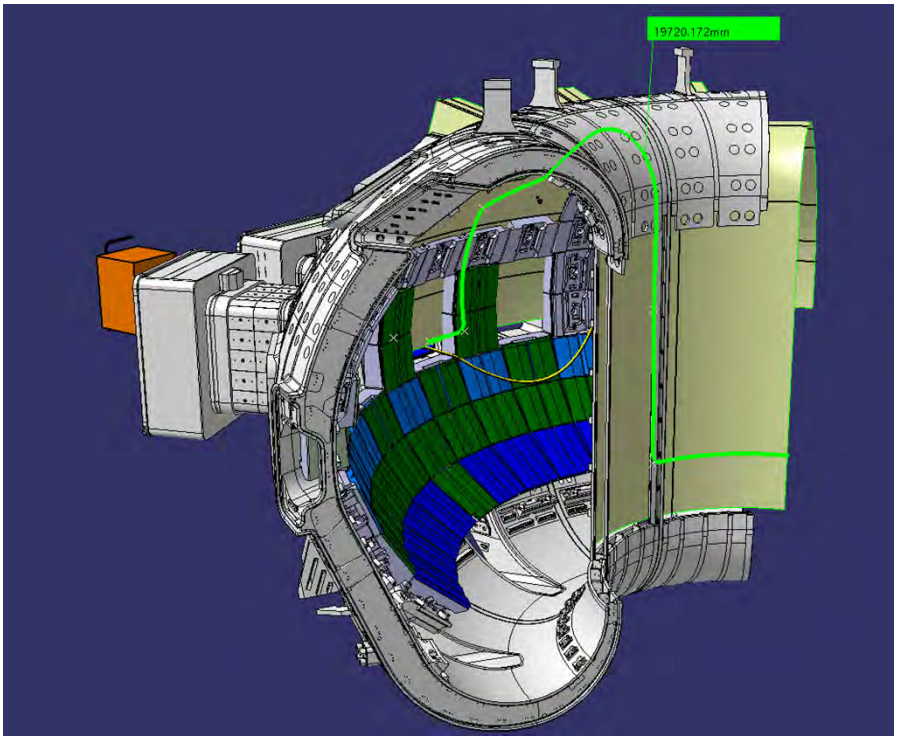

Figure 92 Estimated maximum needed length of umbilical

The coil is to be manually operated and should not have slip rings but a fixed connector which rotates with the coil. When the needed amount of umbilical is uncoiled and the coil is fixed with brakes, it should be possible to connect the welding skid umbilical to the connector of the coil in any random angular position it is in.

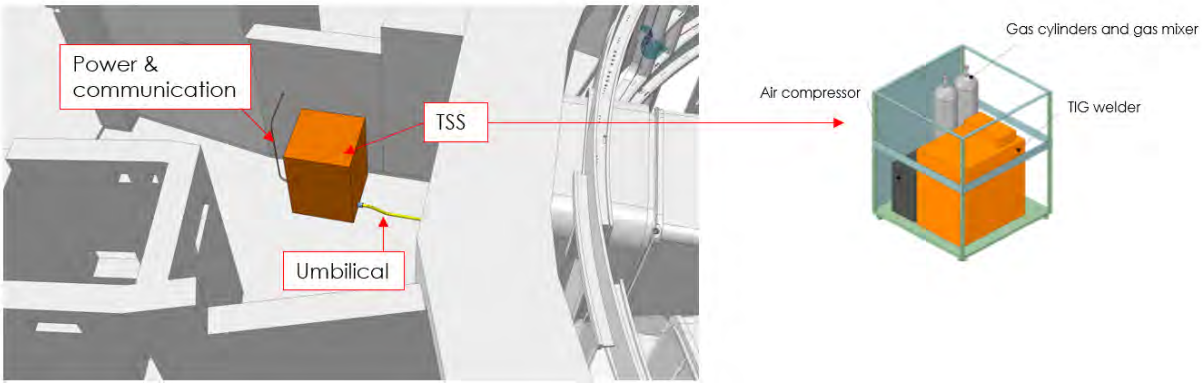

Figure 93 Tooling Services Skid in the Equatorial Port Cell

SUPPLY

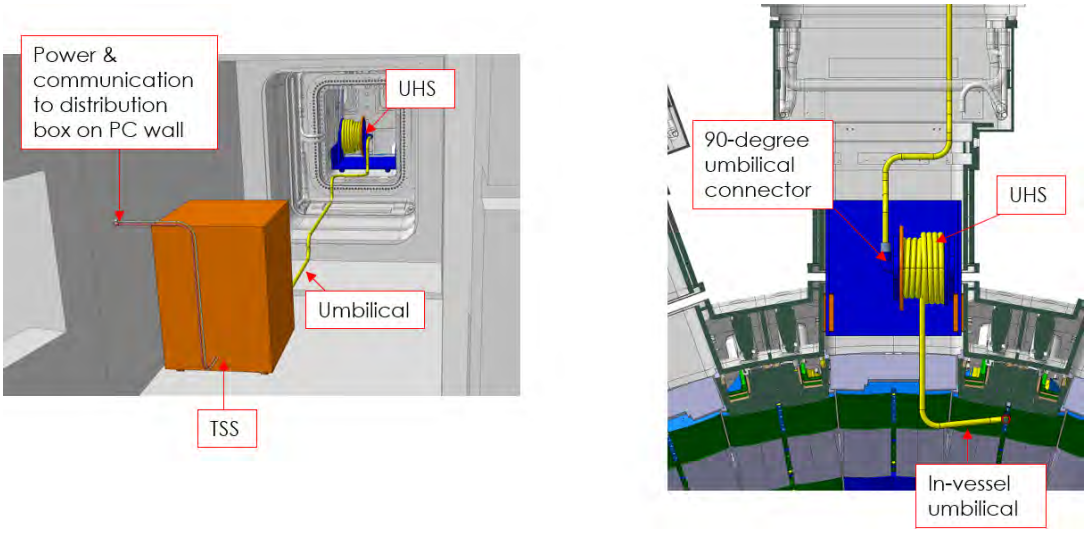

Figure 94 Connection between Tooling Services Skid and Umbilical Handling System

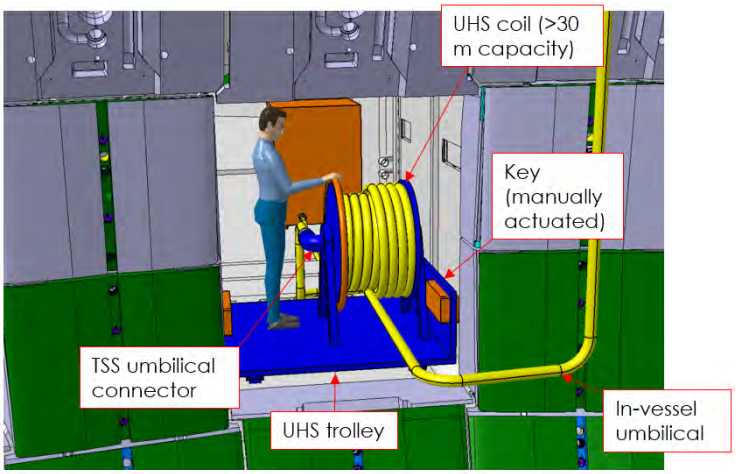

Figure 95 UHS in Equatorial Port

Inside the VV, the umbilical should be clamped at multiple positions to avoid hanging in the torus. The Umbilical Temporary Clamp (UTC) should be able to connect to the VV, a SB or a TFW. Using the ESB threads seems straightforward, because they are the same M24 thread in all 3 cases. The M24 thread does not exist in the TFW design at the moment, but it will be added as a feature to its baseplate design.

The end of the umbilical should connect to one of the Tool Changer connectors, to which it should be fixed firmly. The connector and fixing mechanism of the umbilical should be manual.

SUPPLY

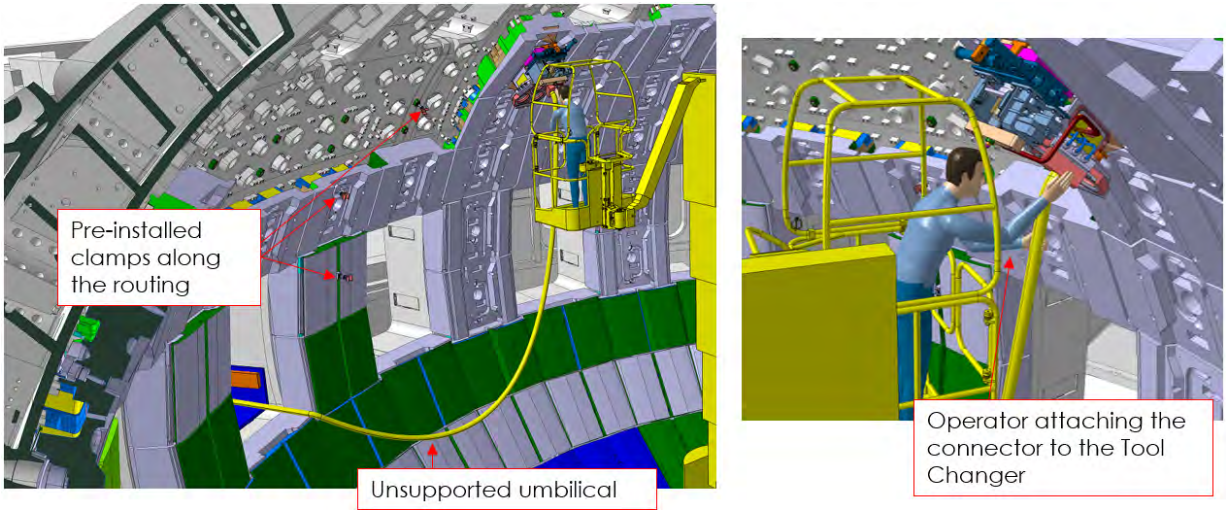

Figure 96 Installation of in-vessel umbilical

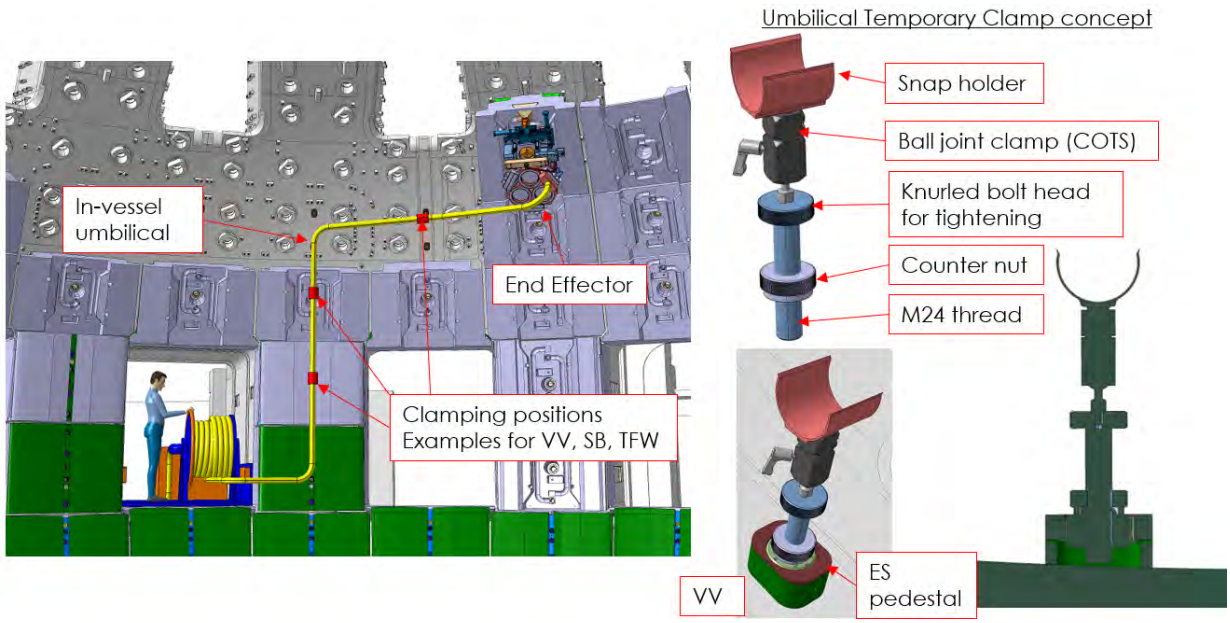

Figure 97 In-vessel umbilical clamping

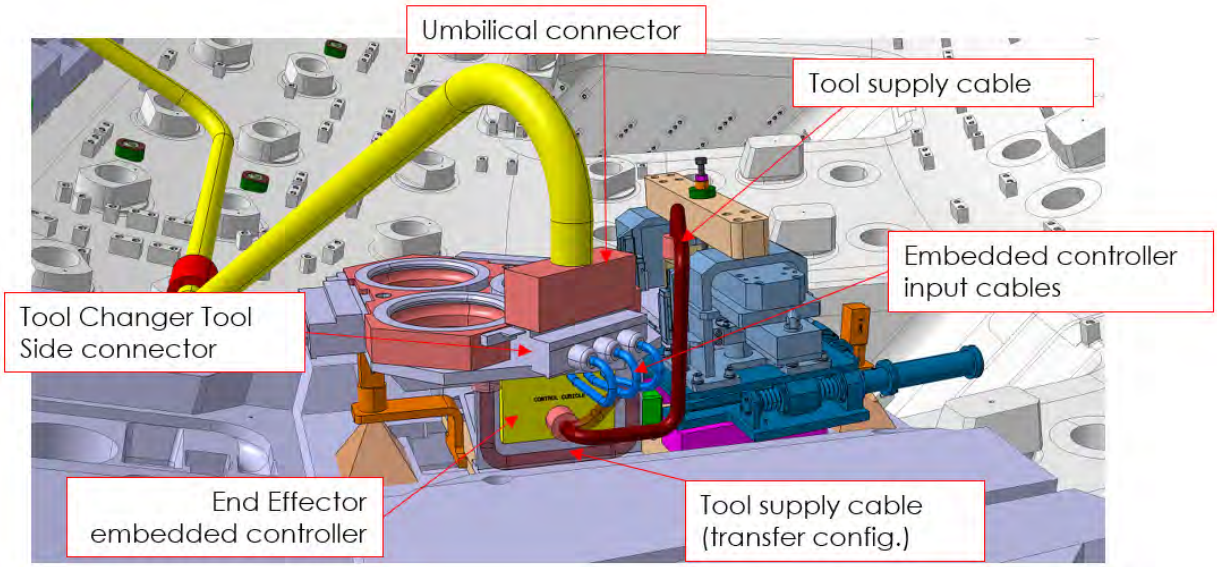

Figure 98 End Effector cabling

SUPPLY

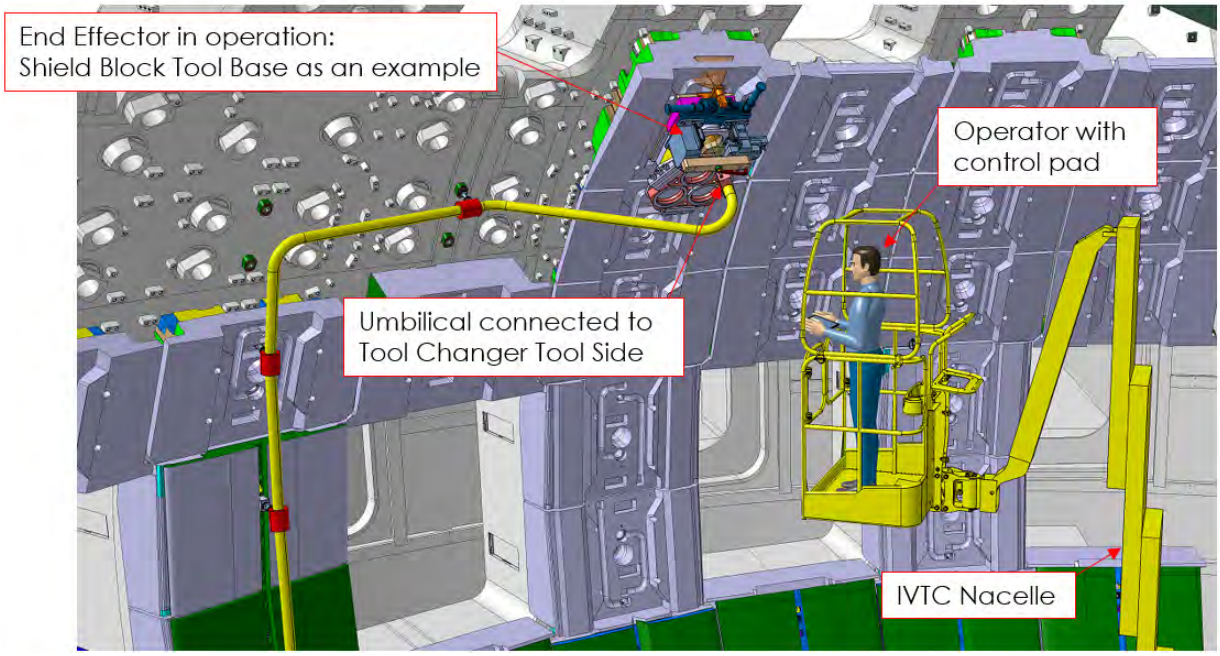

Figure 99 Operation configuration

When the End Effector is operating, an operator on a nearby Nacelle (see Figure 99) should control processes from an HMI unit. The connection between the Embedded Controller and the HMI should be made via a cordless connection (e.g. Wi-Fi). The Embedded Controller should also have connection to the RH control room via the umbilical.

4.2.20 In-Vessel Tool Storage

In-Vessel tool storage options are necessary to enhance productivity by skipping the need to transport Tools from outside the vessel each time they are needed.

When a Tool is being used, it is important to assess, which other Tools will be needed in subsequent operations. Also, there are cases, where the Tools are used in combination to complete an operation. For example, MCAMT and MCWT are always used together, MCWT following MCAMT.

Two options should be developed for in-vessel storage of the Blanket Assembly Tools. Firstly, a Tool Storage Rack (TSR) that is for a longer-term solution aimed at storing Tools on BM18 independently from the BAT or the IVTC Nacelle (after having been fixed to one of the SBs or TFWs in row #18). Secondly, a Nacelle Tool Storage (NTS) should provide quick access to 2 Tools for the operator in the Nacelle.

There can be multiple TSRs inside the vessel, for the operator to have the complete selection of Tools for the operations being performed (MC welding, CC welding, etc.). However, the Tools that are momentarily being used should be stored on the NTS, to have quick interchangeability.

Thus, the TSR and NTS on the Nacelle will have to work in symbiosis, because the TSR will transfer Tools into the VV via the IVDT and BAT, but the required ones will be placed via the zero G arm into the NTS for quick access. After a Tool is not needed anymore, it can be deposed back into the TSR and when a TSR is full of unused Tools, it can transfer them back to ex-vessel, where they can be taken away to long-term storage.

4.2.20.1 Tool Storage Rack

TSR is an End Effector, connected to one of the SBs or TFWs in row #18 and it should be able to hold at least 4 Tools. The TSR should be made compatible with SBs and TFWs in row #18.

SUPPLY

Since the target is always row #18, the TSR should only have 2 versions, one that is compatible with SB#18 and one that is compatible with TFW#18.

When the TSR connects to SB#18, it should have the same interfaces as the other EEs connecting to SBs. This is presented in section 4.2.1.1.

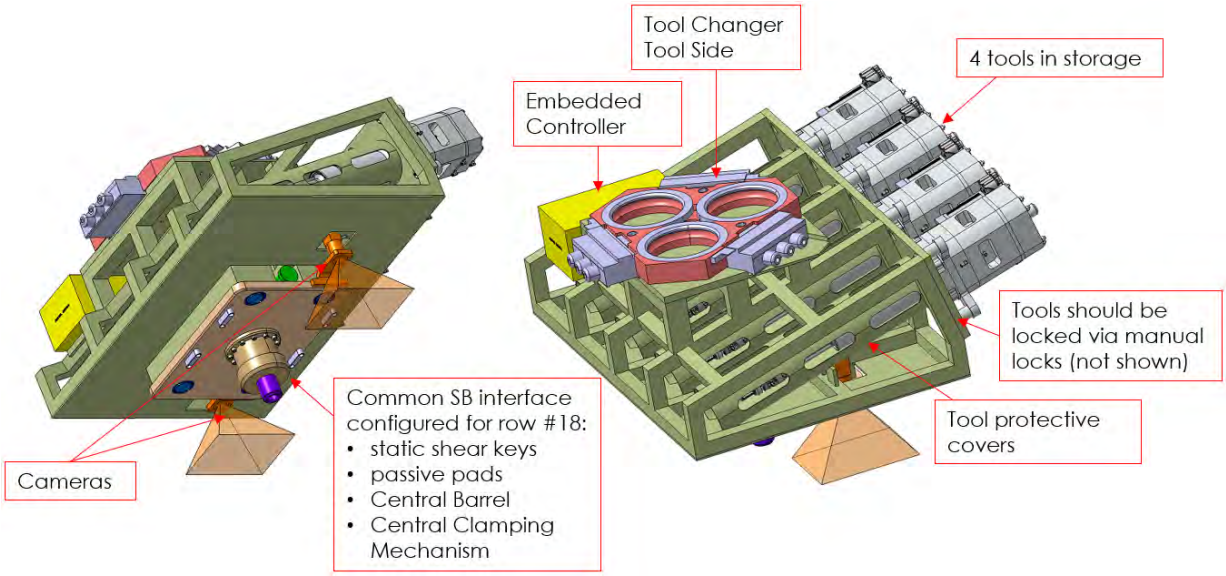

Figure 100 Concept design for Tool Storage Rack showing main functions.

The Tool example shown in the figure above is the CCWT concept design, which will probably be the biggest and heaviest of all Tools. However, the TSR should be made compatible with all Tools, either by adapting all Tools to a common TSR interface or by having different mounting plates or extensions to mount different Tools.

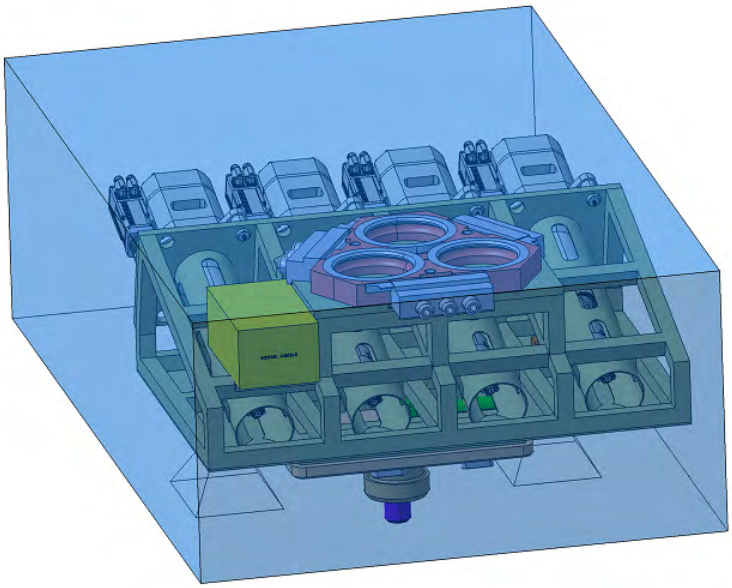

Figure 101 TSR concept design inside the Storage Box volume (2100x1310x665), Tool Changer Tool Side positioned in the midplane of the Storage Box, as prescribed in section 4.2.21

In the case, where the TSR is attached to TFW#18, the gripping functions of the FWG should be copied, namely the active pads and gripping fingers (see section 4.2.17). For the TSR the positioning function of the gripping fingers is not needed, they should be at a fixed position corresponding to the gripping hole positions on TFW#18.

SUPPLY

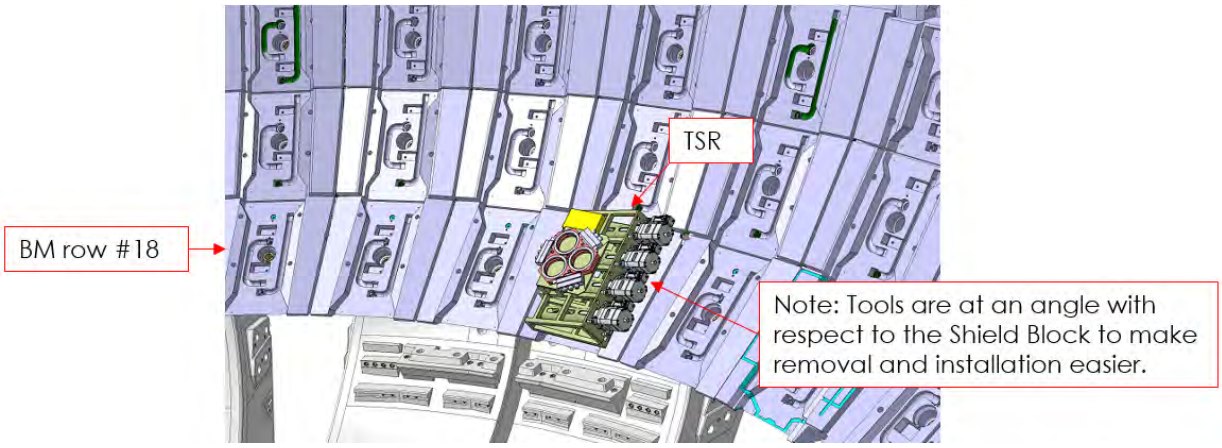

Figure 102 TSR mounted on Shield Block 18, with 4 CCWTs

4.2.20.2 Nacelle Tool Storage

NTS is a structure that should be fixed to the IVTC Nacelle basket frame, and it should be able to hold 2 Tools. The Tools stored in the NTS are directly accessible to the Operator, who can use the zero G arm (also fixed to the Nacelle basket) to pull out or depose a Tool.

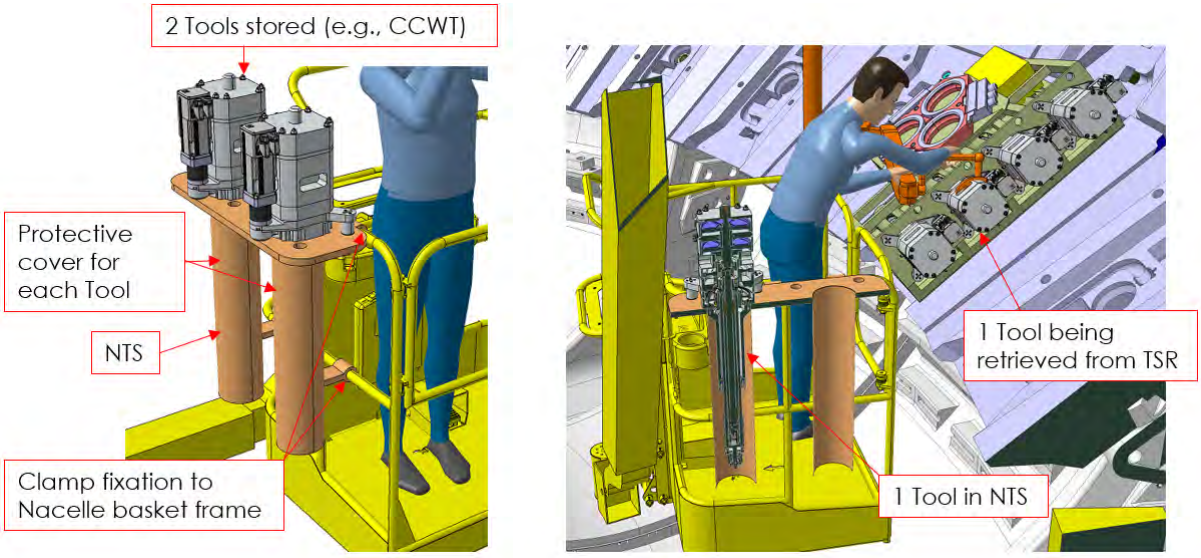

Figure 103 NTS concept design

The maximum payload of the Nacelle is 250 kg, which can be distributed as such:

- 1 operator in protective gear = 90 kg
- 2 Tools = 80 kg
- Zero G arm including elevating mechanism = 65 kg
- NTS system including fixations = 15 kg

Thus, the upper limit for the NTS, with all fittings and fixtures, is 15 kg. On the other hand, the upper limit for the zero G arm, with the elevator mechanism and fittings included is 65 kg.

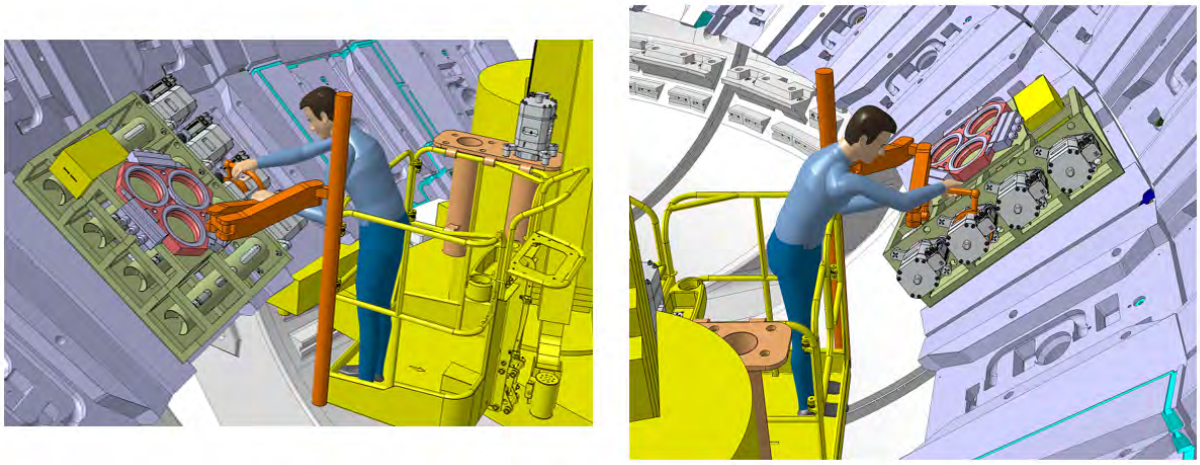

Figure 104 TSR and NTS operating in combination; a Tool is being retrieved from TSR to be placed into the empty slot on the NTS

4.2.21 End Effector design constraints

4.2.21.1 Enveloping dimensions

All End Effectors should be equipped with the Tool Side of the Tool Changer to be able to connect to the BAT General EE. Not only does the EE have to fit within the Storage Box of the IVDT (LxWxH: 2100x1310x665), but the Tool Side of the Tool Changer must be in such a position on the EE that the BAT can approach it with the Master Side of the Tool Changer, engage, lock and lift the EE vertically, away from the EE mounts.

For context, the dimensions of the IVDT Storage Box are shown below.

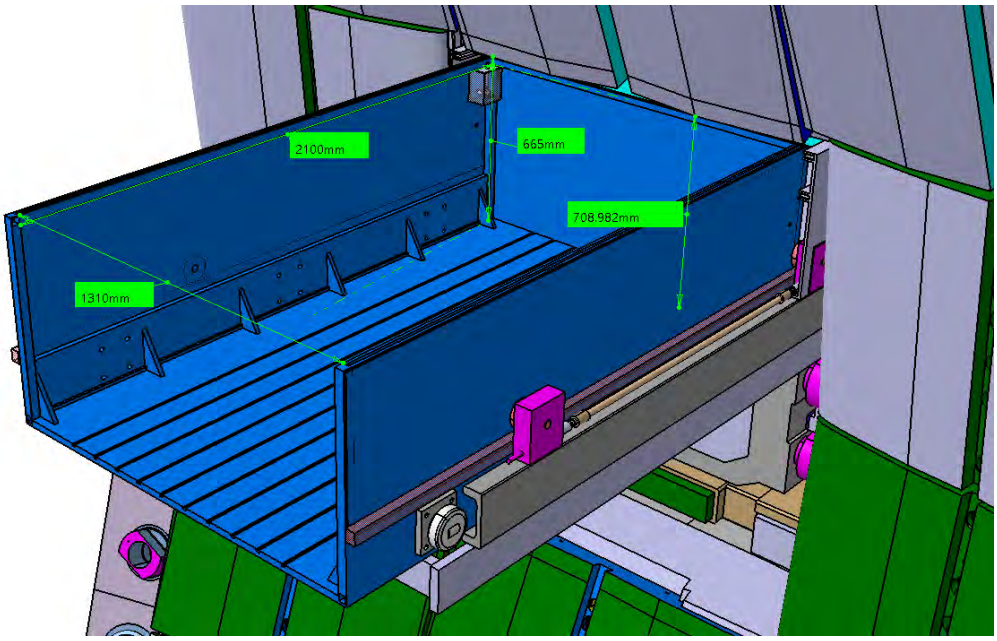

Figure 105 Dimensions of the IVDT Storage Box (bigger)

SUPPLY

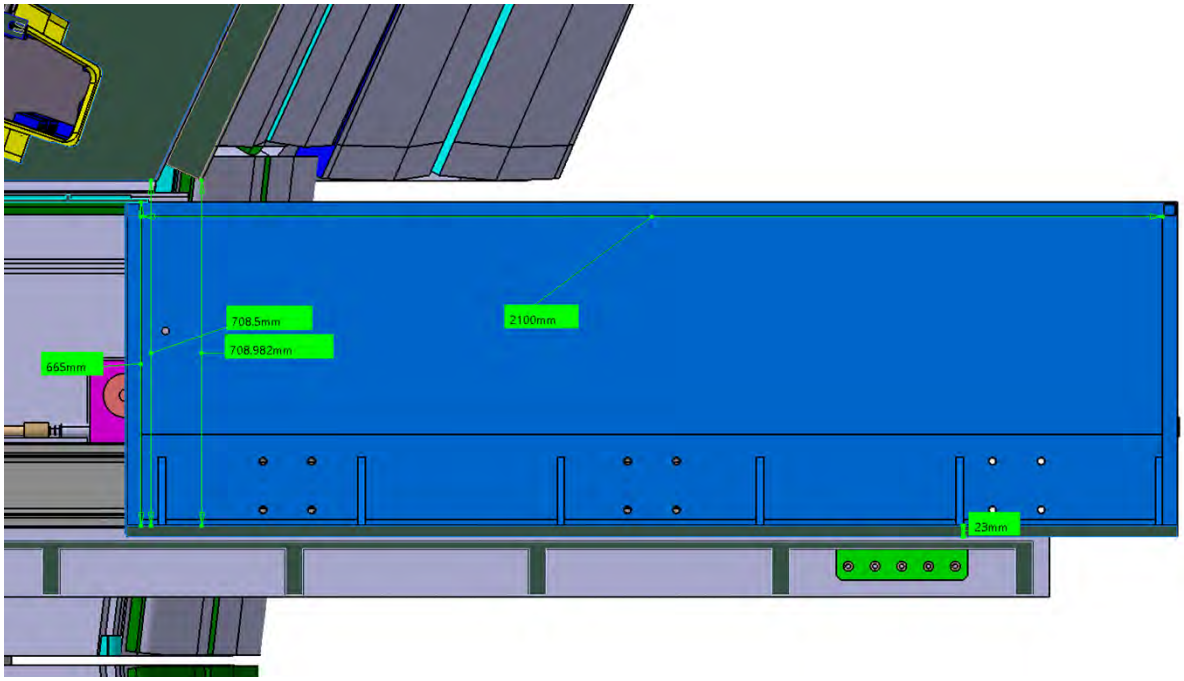

Figure 106 Side view of the IVDT Storage Box

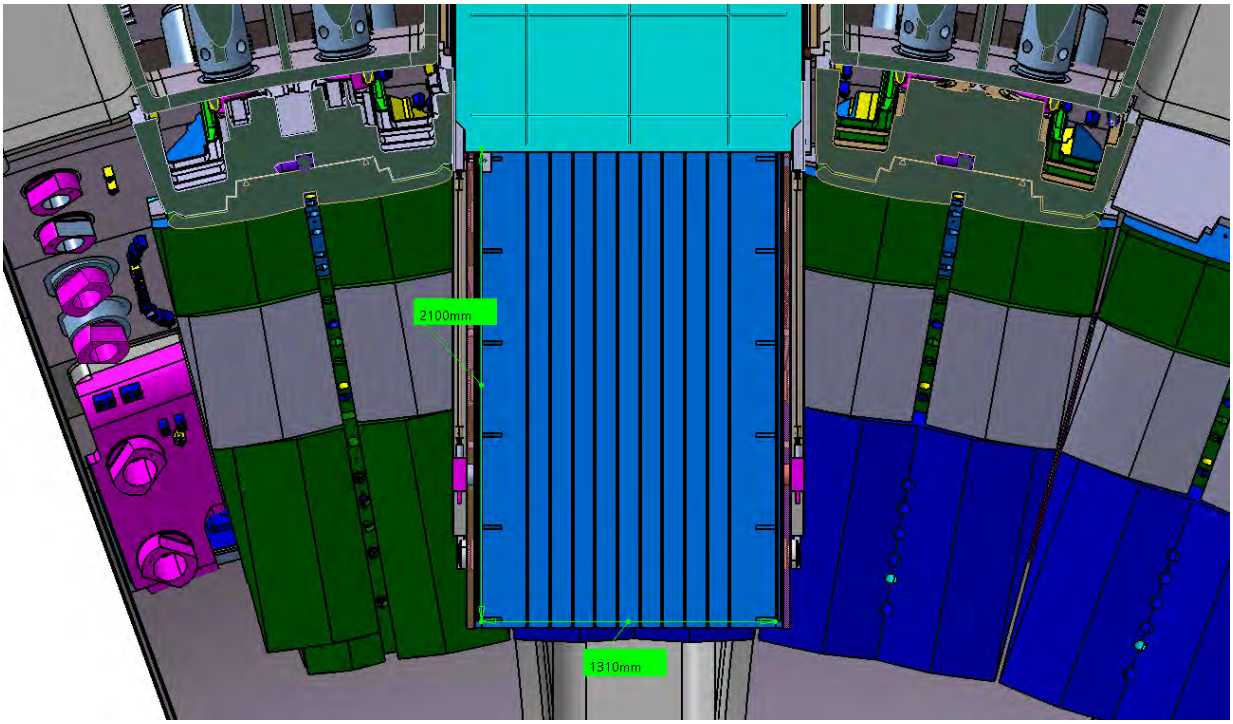

Figure 107 Top view of the IVDT Storage Box

Each End Effector should have a custom designed mount, which is also in the scope of the current Technical Specification. The mounts should mimic the in-vessel features that the EE will connect to eventually. For example, the SBG mount should comprise a central hole with a M64 insert and it should also have side grooves for the keys of the SBG. This is further explained in section 4.2.21.2. The component fixing method to the Storage Box will be the same as it is to the Storage Plate described in section 4.2.21.2.

The End Effectors to be designed cannot occupy the full volume of the Storage Box, because they have to be grabbed by the BAT and elevated to take them off of their custom mounts, which are fixed to the bottom plate of the Storage Box.

SUPPLY

The enveloping dimensions of the EE (with mount included): LxWxH: 1780x1300x665 mm (see Figure 108.

The Tool Changer Tool Side must be installed to every End Effector. In transfer configuration inside the Storage Box, the Tool Changer Tool Side must face upwards, but its axis can be tilted towards the central solenoid axis by a maximum of 29 degrees.

The Tool Changer should be positioned in the symmetry plane of the Storage Box. Its angular orientation should coincide with the 0-degree configuration of the General End Effector Tool Roll Axis, meaning that if we look at the Tool Changer Tool Side as a triangular shape, one of its sides should face the port and the point of the triangular shape should face the inboard side of the tokamak (all Tool Changers are oriented so in the pictures below).

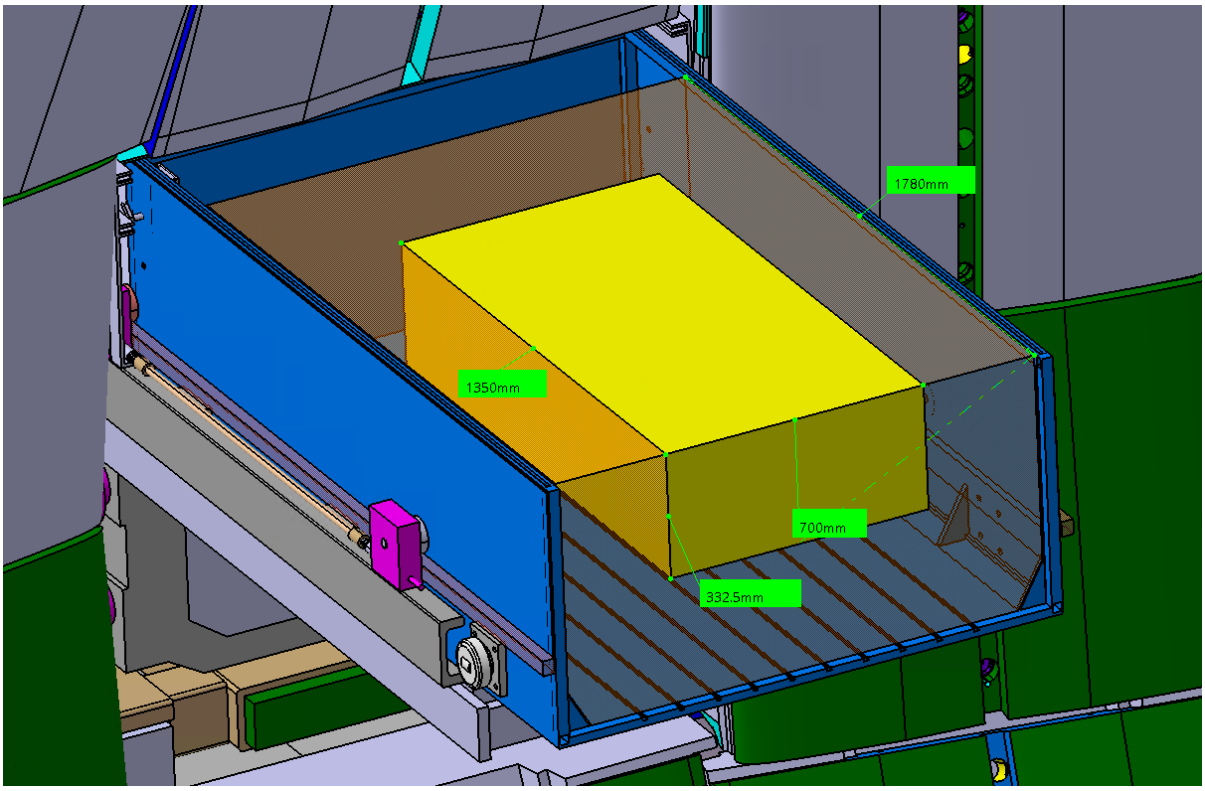

Figure 108 Available volume for placement of the Tool Changer Tool Side (yellow) with respect to the space reservation of the EEs (transparent orange (includes yellow))

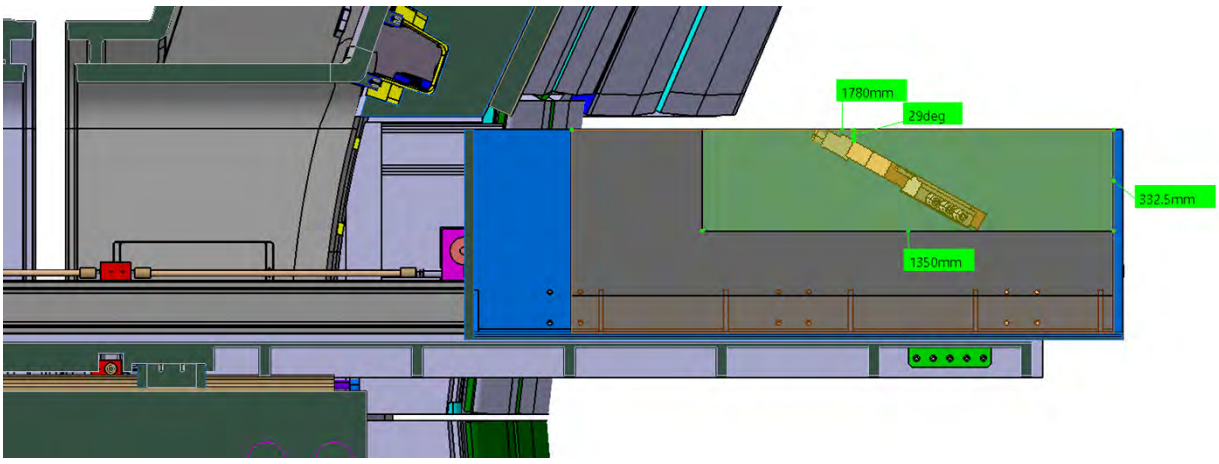

Figure 109 Side view of the Tool Changer Tool Side placement volume (yellow) with respect to the space reservation of the EEs (transparent orange (includes yellow))

SUPPLY

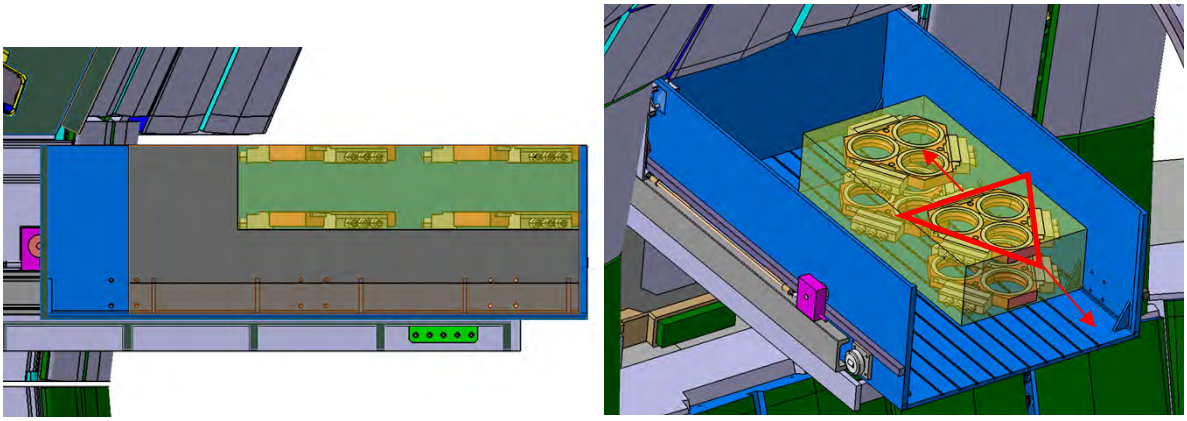

Figure 110 Horizontal Tool Changer positioning option extreme configurations (red triangle highlights the angular orientation that coincides with the GEE Tool Roll Axis 0-degree configuration (explained before))

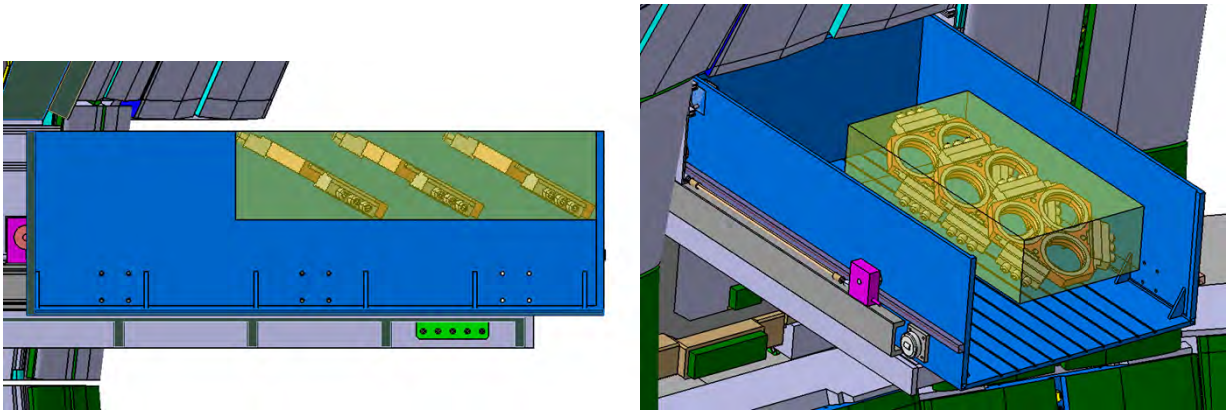

Figure 111 Tool Changer Tool Side possible tilted configurations

Tool Changer placement must be confirmed with IO for each EE, once the EE design is matured enough, in order to perform a kinematic analysis with BAT VR tools.

4.2.21.2 Pre-SRO transfer context

During pre-SRO assembly all the Shield Blocks, Temporary First Walls and End Effectors related to Blanket Assembly will be transferred into the vessel via the Blanket Module Transfer System (BMTS).

Functions of the BMTS:

- All equipment will be mounted on a Storage Plate.
- Storage Plates are mounted on the BMTS carriage by the Through Port Transfer System (TPTS) in the Port Interspace
- BMTS carriage delivers equipment from Interspace to In-Vessel via rails
- At the end of the rails in the VV, the Storage Plate is tipped at 90 degrees to show the delivered component to the Blanket Assembly Transporter (BAT)

SUPPLY

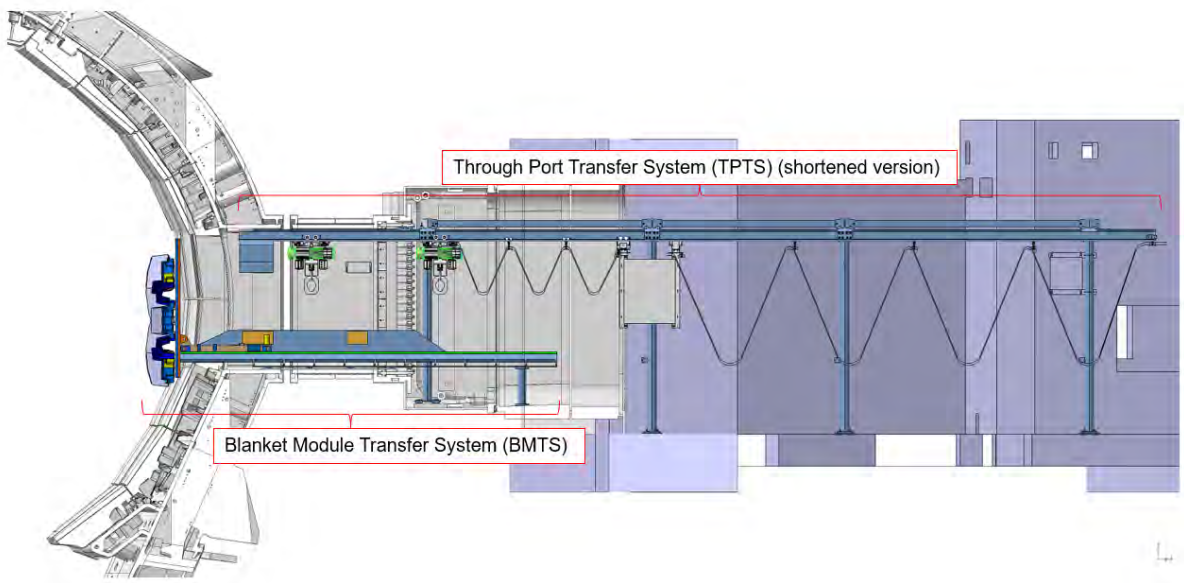

Figure 112 Overview of the BMTS concept

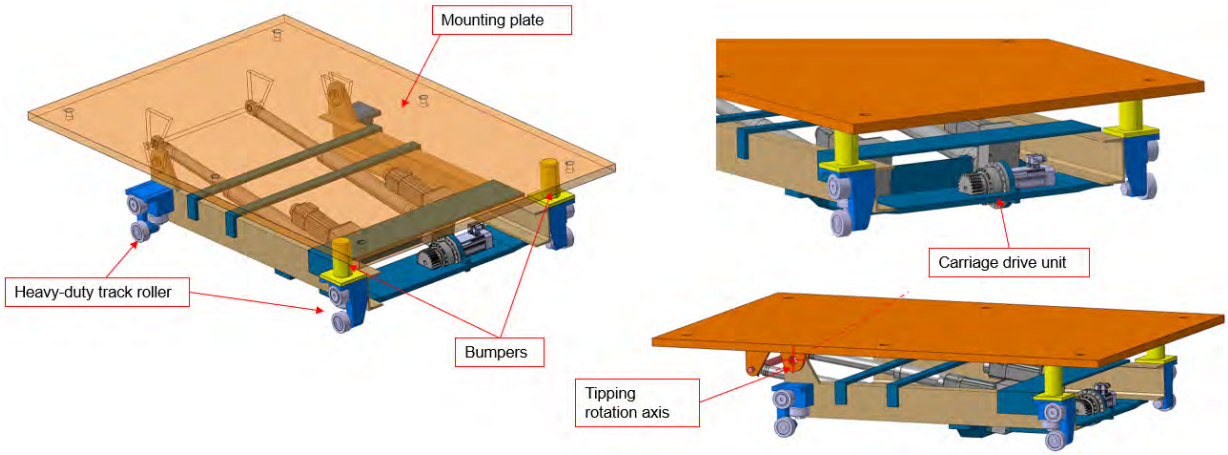

Figure 113 BMTS carriage

The Storage Plate concept will be shown through the example of SB9 and the SBG EE.

The Storage Plate inherits the length and width of the baseplate Storage Box of the IVDT (presented in the previous section), 2100x1310 mm. The height restriction for the equipment being transferred is the same as in the IVDT Storage Box context (see Figure 106), namely 665 mm measured from the Storage Plate top surface. Also, the same restrictions apply to the space occupied by the End Effector on the Storage Plate, as described in Figure 108. The thickness of the plate is 30 mm, and it is made out of stainless steel.

SUPPLY

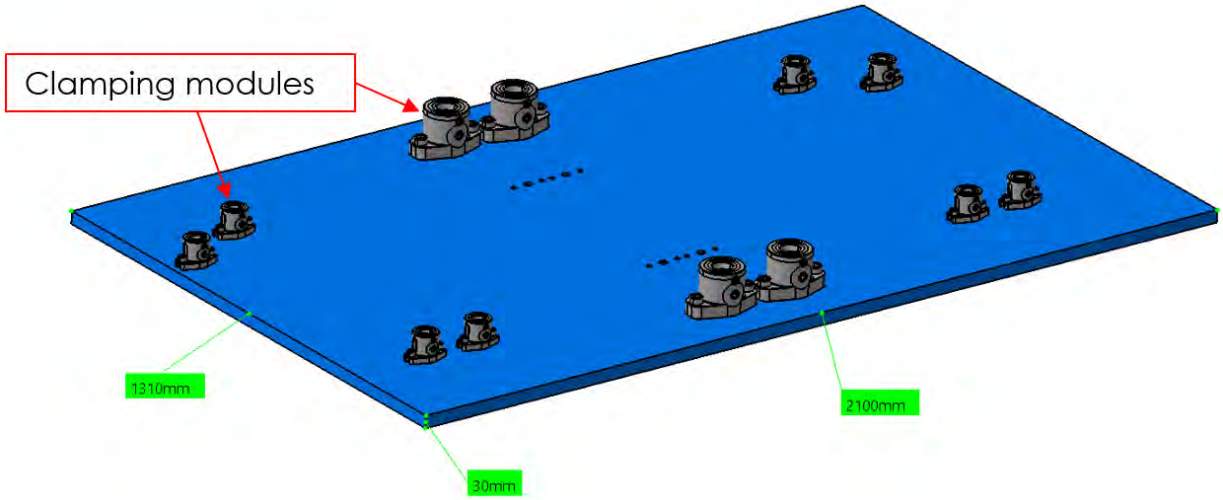

Figure 114 Overview of Storage Plate (in SB9 transfer config)

As can be seen in the figure above, there will be Clamping Modules connected to the Storage Plate that facilitate quick connection of mounting modules.

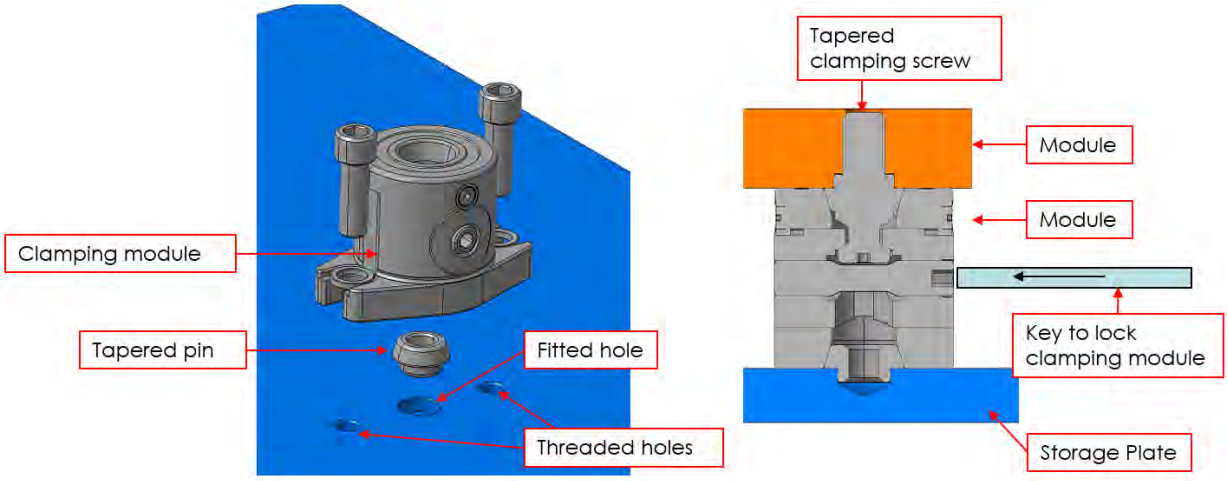

Figure 115 Presentation of clamping modules and interfacing features on the Storage Plate

These clamping modules are manufactured by Imao in Japan:
https://www.imao.com/catalog/en/categoryviews/?categorycode=&category=$102107&page=1

Two different sizes will be needed, and the bigger ones will only be needed for SB transfer, due to their higher load capacity. The two selected modules are CP150-12063 and CP150-20100, with 15 and 35 kN clamping force respectively.

SUPPLY

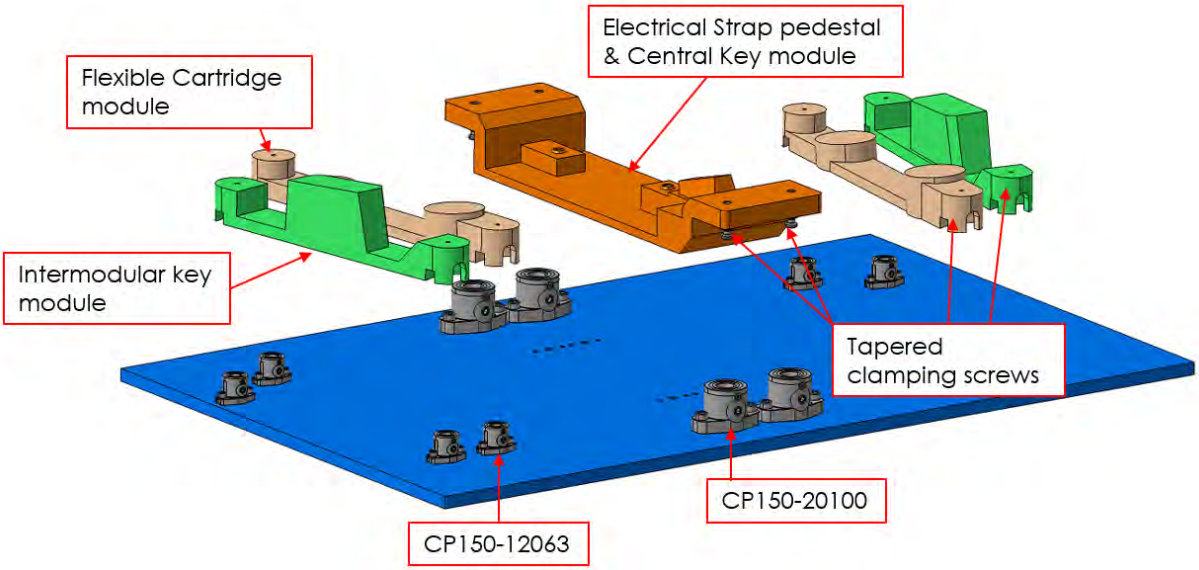

Figure 116 Clamps and modules used for the attachment of SB9

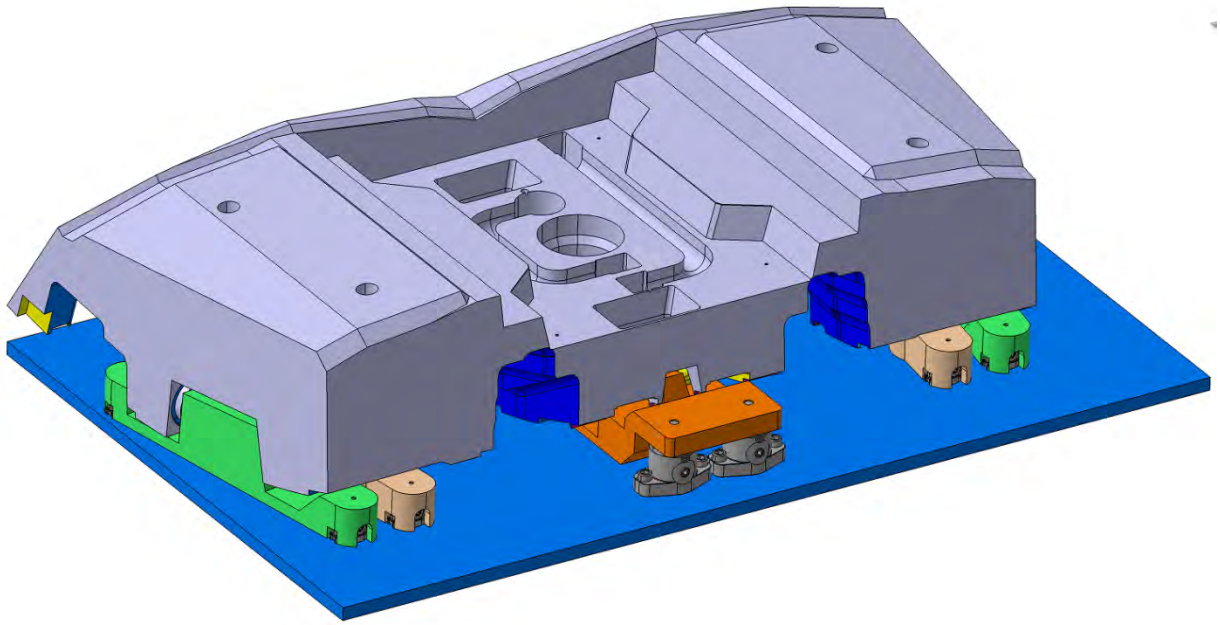

Figure 117 SB9 mounted on the Storage Plate via the modules

Clamping module should always be oriented so on the Storage Plate that their sockets are perpendicular to the side of the Storage Plate (it does not matter which side), to be directly accessible for the operator to activate the clamping mechanism with a key. An electric drill will be used for this with an extension wrench, to speed up the process. It is also important that the modules should not obstruct the access to any of the clamps in use.

SUPPLY

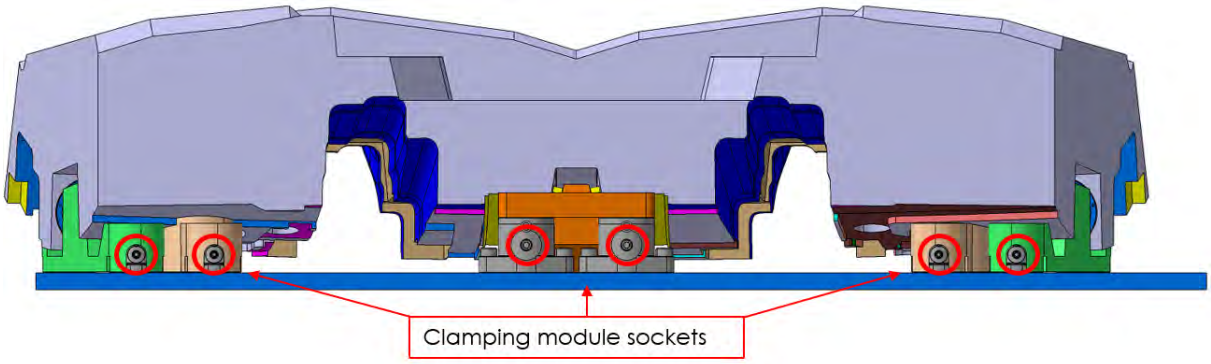

Figure 118 Unobstructed direct access to clamping module sockets from the side of the Storage Plate

Other Shield Block mounting modules should follow the same concept, using the bigger clamps for the central ES pedestal and Central Key module, because in the vertical (tipped by BMTS) configuration, these are expected to carry the bulk of the SB weight.

Apart from the Shield Blocks, all the other equipment (EEs, TFWs) should be mounted on the smaller type clamps. An example for SBG is shown below.

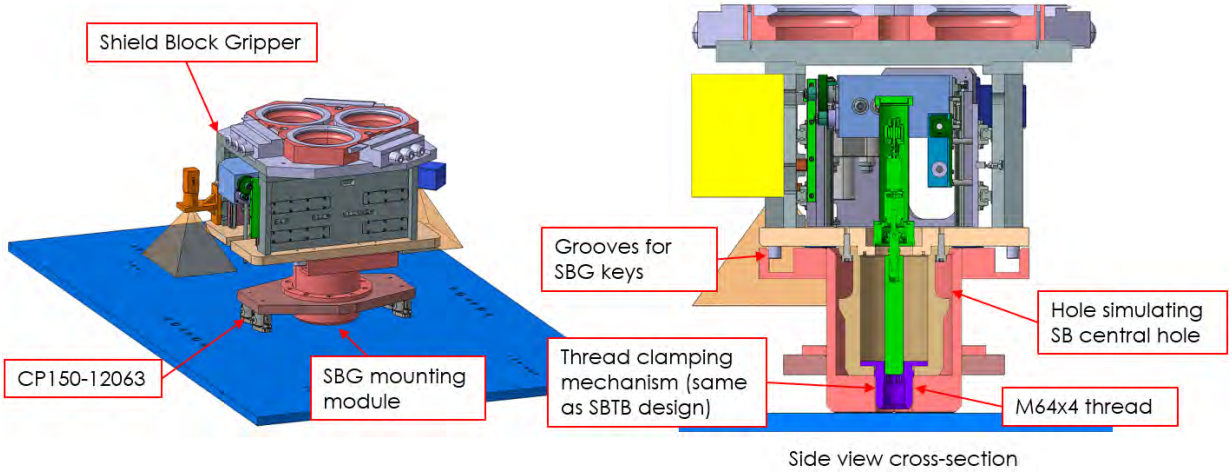

Figure 119 SBG mounted on the Storage Plate

In order to reduce the number of clamp reconfigurations and to make the exchange of equipment faster, the clamp positions should follow a pattern (defined by JADA and subcontractors) on the Storage Plate, and the module designs should be adapted to these existing, patterned clamping positions.

4.2.22 Tool design constraints

The Tools will be transferred into the VV and installed to a temporary tool storage on the IVTC Nacelle. It will be possible to store 2 Tools at the same time on the Nacelle.

SUPPLY

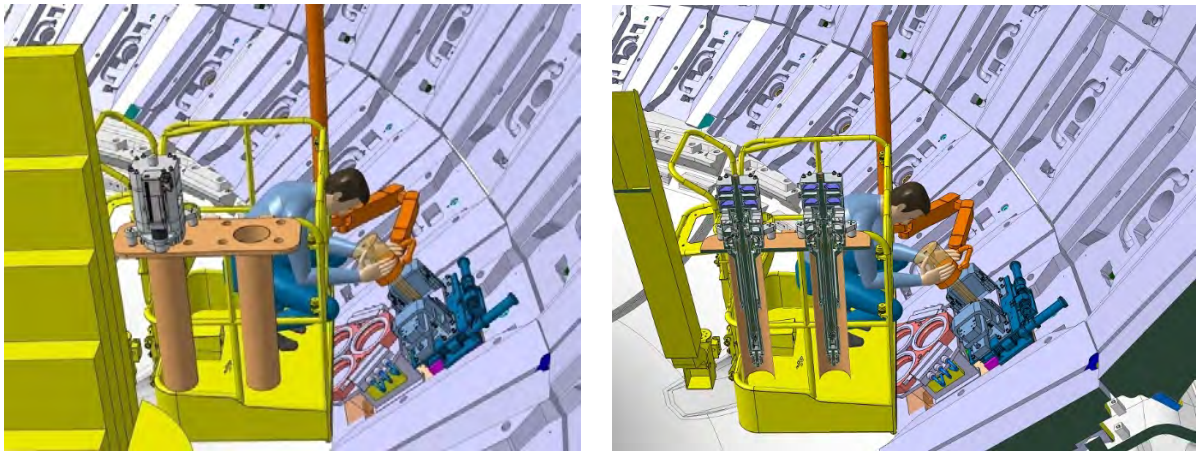

Figure 120 Temporary tool storage on the Nacelle. Normally, one Tool is stored, and one is in operation (left), but the NTS should be able to store 2 Tools at the same time (right)

Tools should be designed to be compatible with the NTS. Also, their design should allow being lifted out of the storage vertically by the zero G arm. The zero G arm will be able to reach above the temporary storage for a Tool to be fixed to its tool interface.

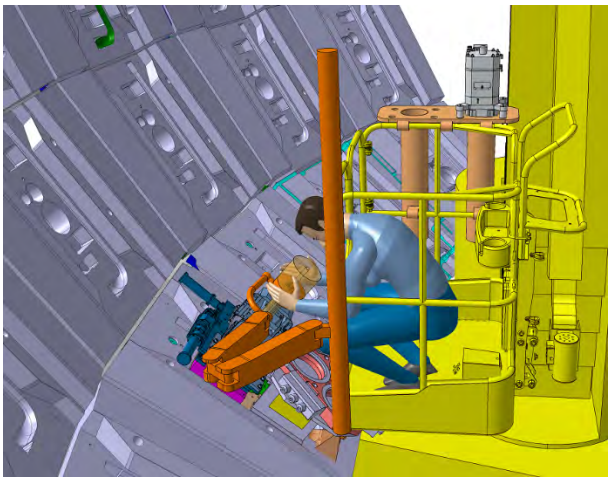

Figure 121 Operator installing a Tool to the SBTB located on a SB in row 18; another Tool is stored in NTS

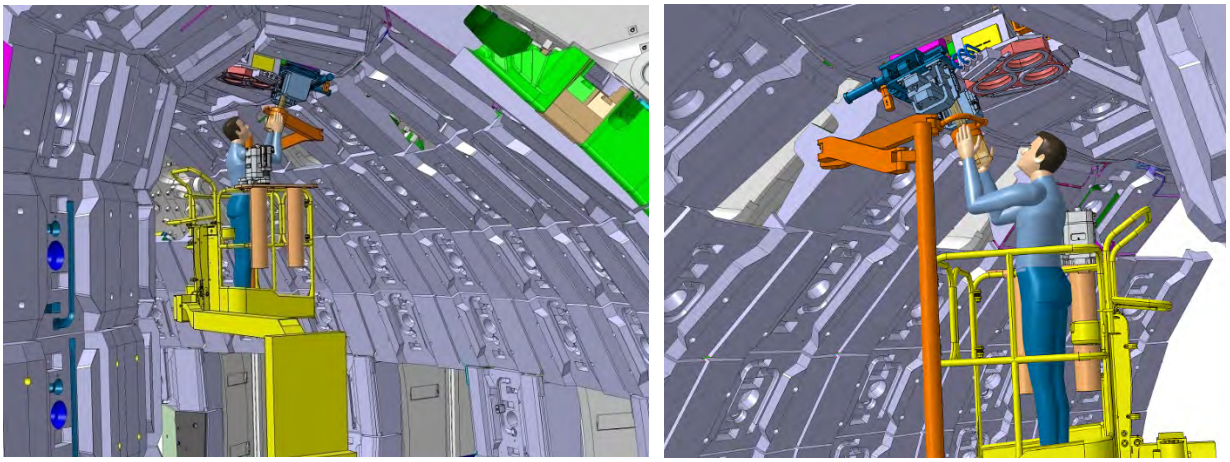

Figure 122 Operator installing a Tool to the SBTB located on a SB in row 9; another Tool is stored in NTS

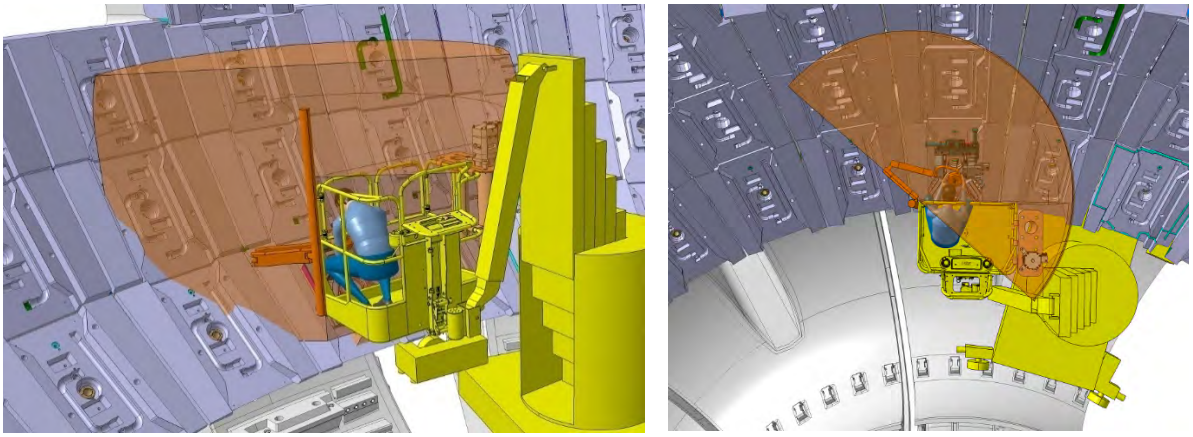

Figure 123 Theoretical reach of the zero G arm. TBC with supplier.

The zero G arm connection will be realized with the use of a COTS Tool Changer interface. Between the tool side of the COTS Tool Changer and the Tool itself, a roll joint is to be added. This is to be further explained by IO when the model for this concept is consolidated, following discussions on the feasibility with potential suppliers.

4.3 Control System for Blanket Tooling

JADA and their contractors shall develop the control system for Blanket Assembly Tooling.

The scope is composed of the following activities:

- Design of control system for Blanket Assembly Tooling
- Design of I&C hardware design and software
    - Controller design (cubicle layout in Skid and wiring diagrams)
    - Data acquisition and signal monitoring system design
    - Command and Control software for FAT
    - Command and Control software for implementing to a mobile device
- Development of the FATP/SATP
- Manufacturing of I&C hardware
    - Remote Controller for Transporter mode and Skid mode
    - Local Controller for Blanket Assembly Tooling
    - A cubicle for Skid
    - Mobile device including Command and Control software for Skid mode
- Providing Command and Control software which is used for FAT
- Testing in FAT/SAT
- Design justification by completing the DCM

JADA will support integration with Command and Control for the control container.

4.3.1 Control System Architecture Requirements

The Blanket Tooling (23.01) is part of the integrated PBS23 system that needs to be remotely controlled from outside the Vacuum Vessel. The overall PBS 23 Control System architecture is shown in the figure below, with PBS 23.01 highlighted.

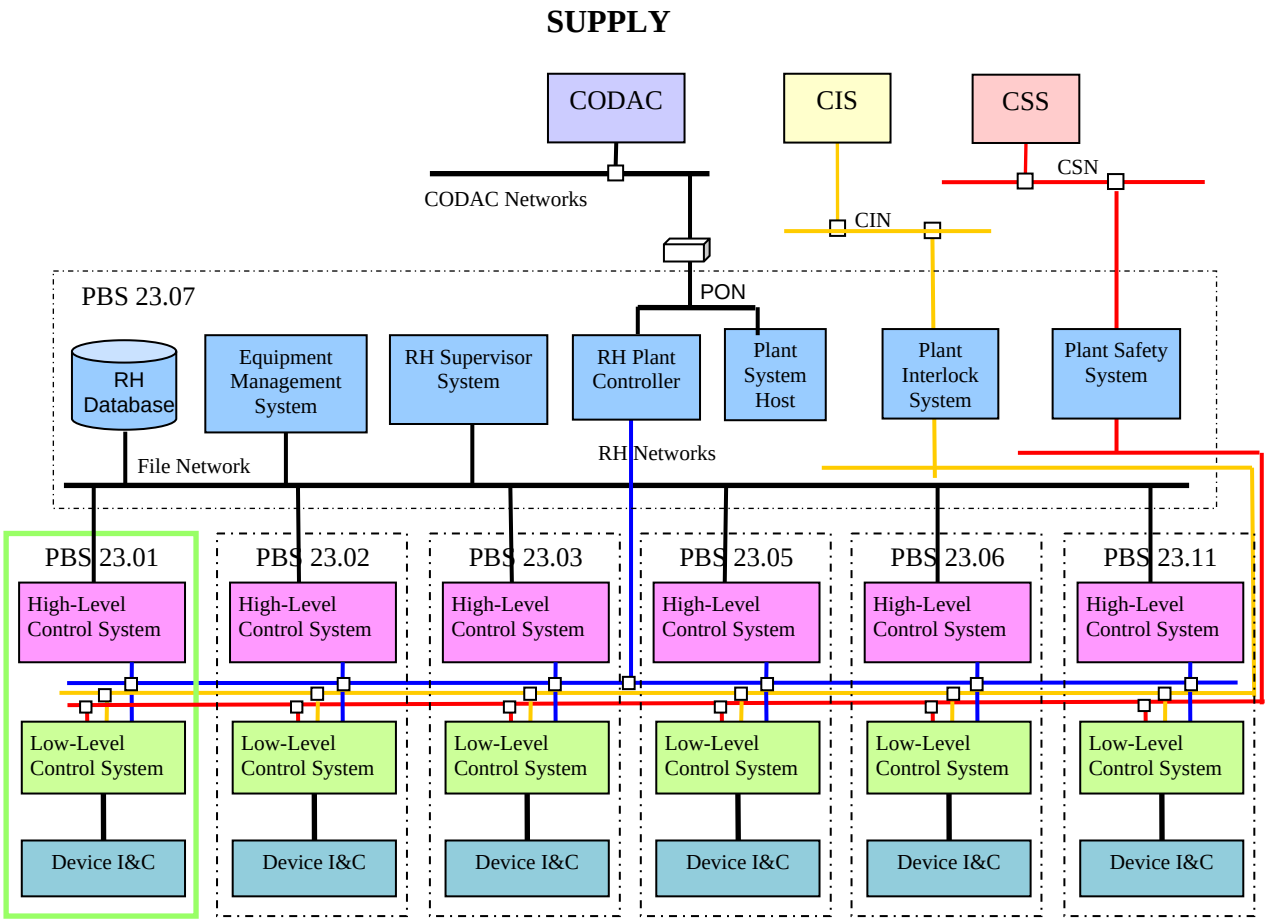

Figure 124. Integrated PBS23 Control System (PBS23.01 highlighted)

The Blanket Tooling control system shall have 3 tiers:

- High-Level Control System (HLCS): Operator interfaces in the control room or via mobile device,
- Low-Level Control System (LLCS): Embedded equipment controllers,
- Device I&C: Actuators and sensors on the devices.

For the Blanket Tooling, the low-level control system shall be divided into two parts:

- Remote controller: Common control module located outside of vacuum vessel,
- Local controller: Tool specific axis drivers on-board the end-effectors.

As previously described, there are two modes of operation of the Blanket Tooling System:

- Operation of the Tooling when mounted on the BAT (Transporter mode),
- Operation of the Tooling when installed on the vessel walls (Skid mode).

The deployment and routing of the connections for the two modes of operations is indicated in the figure below.

SUPPLY

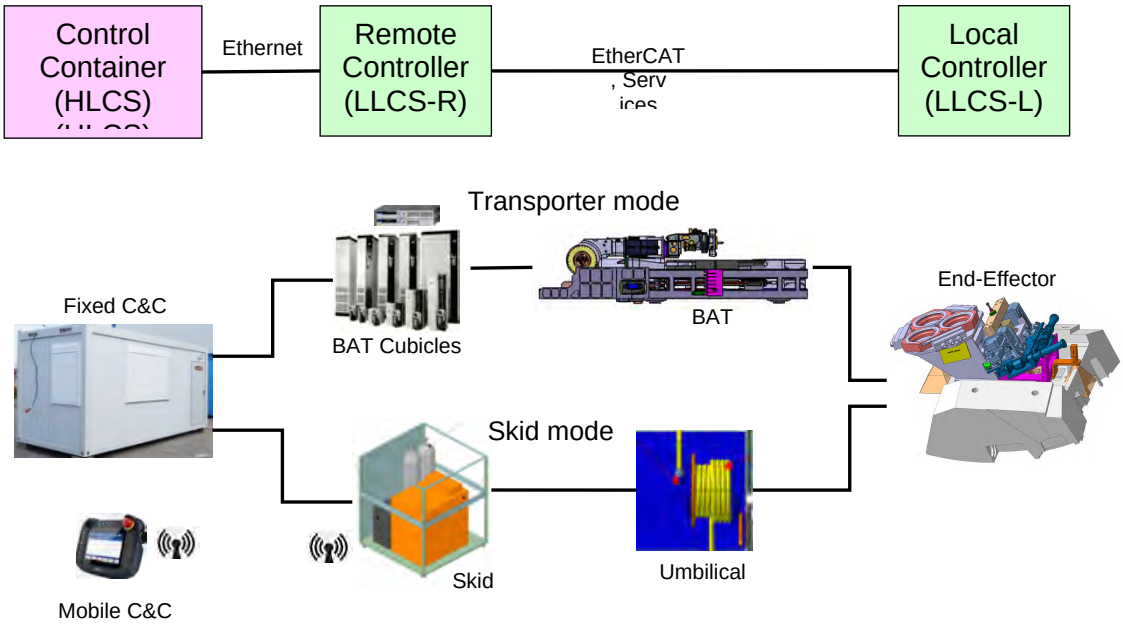

Figure 125. Distribution of the Blanket Tooling Control System

The operation mode through the Transporter has tight constraints for cable routing. The design and operation of the end-effectors in this mode shall be based on the transporter routing a minimal set of cables to the end-effectors:

- Power for end-effector local controller
- Communication (EtherCAT),
- Camera network link.

The operation mode through the Blanket Tool Supporting Equipment (BTSE) shall support the operation of the End-Effector and Tools in the installed positions. The Skid and umbilical cabling shall provide the required services for the Tool operations (e.g. welding operations):

- Power for end-effector local controller
- Communication (EtherCAT),
- Pressurized air,
- Welding gases,
- Welding power.

In the Skid Mode, the architecture (figure 111) allows control from either the wired remote control container or from the wireless local handheld control device.

A key switch shall be implemented in the Skid remote controller to switch between the wired C&C control and the wireless C&C control to avoid any conflict between the two.

Note: The Blanket End-Effectors have cameras fitted that are required for the accurate positioning of the end-effectors by the Transporter. These cameras shall be interfaced directly with the BAT Vision System rather than the Blanket Tooling Control System.

<u>High-Level Control System</u>

The Blanket Tooling shall provide the following HLCS HMI's:

- Command & Control (C&C): HMI to operate the end-effector/tooling.

SUPPLY

- Fixed HMI in control container with wired ethernet connection,
- Mobile HMI on Nacelle with wireless ethernet connection.

The Blanket Tooling System shall interface with the Virtual Reality HMI (not part of this procurement contract). The procedures for operating the Blanket Tooling System shall be integrated into the overall in-vessel assembly procedures that shall be managed by the Operations Management System (not part of this procurement contract).

Low-Level Control System

The Blanket Tooling system shall have remote controllers for the two operation modes:

- Cubicle based remote controller: This provides the control module for remote control of the end-effectors when mounted on the BAT (Transporter Mode),
- BTSE Skid based remote controller: Provides the control module and process services for the remote control of the end-effectors and tools when fitted to VV (Skid Mode).

The Blanket Tooling end-effectors listed below shall each have on-board local controllers:

- SBG: Transporter Mode only
- FBT: Transporter Mode and Skid Mode
- SBTB: Transporter Mode and Skid Mode
- 15NDG: Transporter Mode only
- 15NDTB: Transporter Mode and Skid Mode
- FWG: Transporter Mode only
- FWCBT: Transporter Mode only

The specific control system elements that shall be provided as part of the Blanket Tooling Control System are shown in the figure below (not greyed out items).

SUPPLY

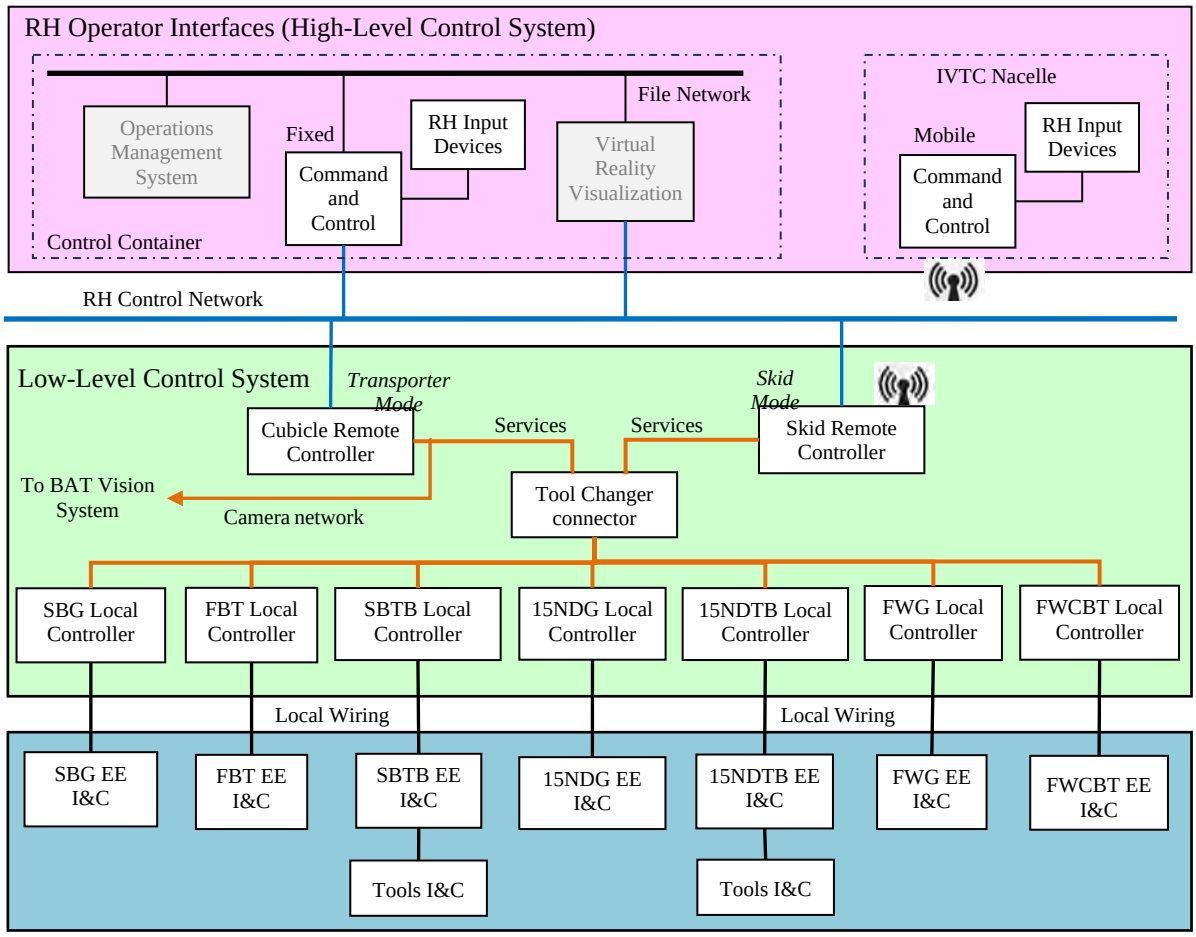

Figure 126. Blanket Tooling Control System elements

<u>Transporter Mode Operation</u>

In Transporter Mode, the Blanket Tooling End-Effector is mounted on the end of the BAT via the Tool Changer. The service lines to the End-Effector are connected, and the cameras on the End-Effector are connected back to the BAT vision system.

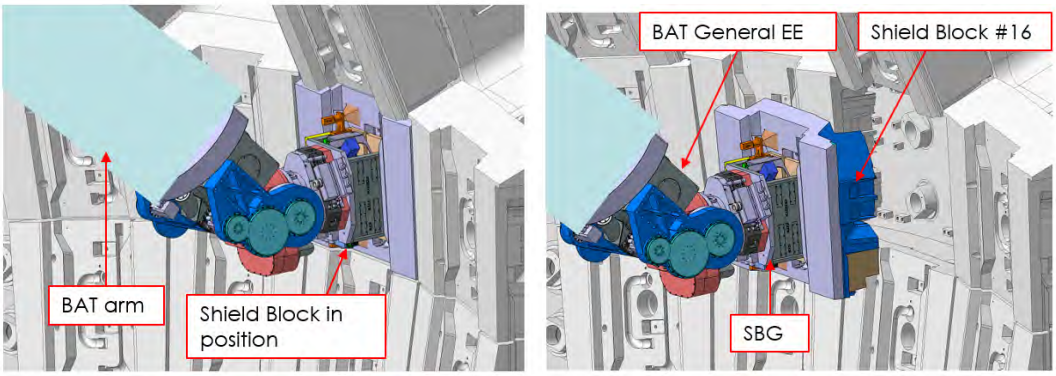

The operations require sequential operations of the BAT and the End-Effector. For example:

- BAT is positioned to stand-off position to Blanket module,
- Using the vision system feedback, the BAT aligns and engages the End-Effector with the Blanket Module,
- The Tooling End-Effector is then operated to grip the Blanket Module,
- The Tooling End-Effector releases the Blanket Module fixation,
- The BAT is operated to transfer the Blanket Module load onto the BAT,

SUPPLY

- The BAT moves the Blanket Module away from the VV wall.

The operation sequences must be carried out in the precise validated order. This shall be ensured by implementing the sequences of the BAT and the Tooling in a common play-back file.

Skid Mode Operation

In the Skid Mode, the Blanket Tooling End-Effector is installed on the Vacuum Vessel and controlled from the BTSE Skid.

It shall be possible to operate the tool either remotely from the Control Container or locally by an operator on an IVTC Nacelle. To enable this, the Skid remote controller shall support wireless communication. This arrangement shall allow the Command & Control HMI to be run on a mobile computer that is carried on the IVTC Nacelle inside the vessel.

Note: These two operating methods are essentially the same. The only difference is the C&C using wireless communication with the Skid instead of wired communication.

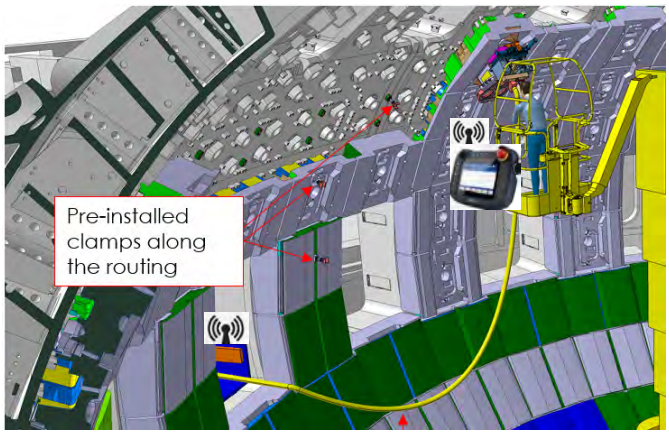

Figure 127. Wireless operation of the Blanket Tooling from in-vessel Nacelle

4.3.2 Control System Detailed Requirements

Command & Control HMI

The C&C HMI shall consist of a GUI, a joystick, and an emergency stop button.

The C&C application shall provide the operator with the functionality to operate the Blanket Tooling System:

- Display of status data,
- Interface to build and send operating commands,
- Running pre-recorded operation sequences,
- Display of messages (events, warnings, alarms)

The C&C shall communicate with the EE controller using the Low-Level CIP API (provided by IO [R13]).

The design of the C&C layout shall involve review iterations with the ITER operation team at an appropriate time in the development lifecycle.

The EE controller communication data (status data, commands, alarms, events) shall be provided to the IO.

A version of the C&C shall be provided for operation of the EE in the Transporter mode remotely from the control room – ‘fixed’ C&C.

SUPPLY

A version of the C&C shall be provided for operation of the EE in the Skid mode locally from the Nacelle – 'mobile' C&C.

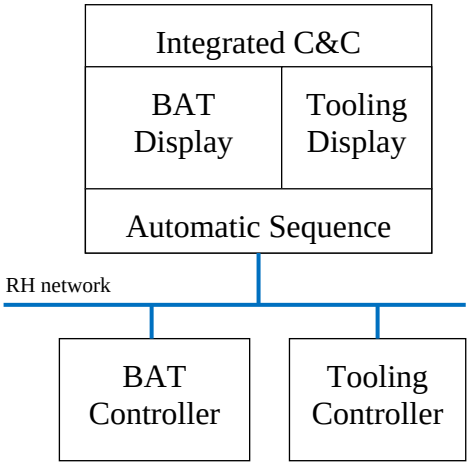

Figure 128. Concept of Integrated C&C for safe execution of Blanket Assembly operations

Fixed C&C

The fixed C&C shall be designed to run on a standard control room computer.

The fixed C&C shall be implemented to run on the Red Hat Enterprise Linux (latest version used by CODAC).

The fixed C&C source code shall be provided to the ITER operation team and JADA shall support the integration of the Blanket Tooling fixed C&C with the BAT C&C.

The integrated C&C shall have the capability to run pre-programmed sequences (written using Structured Language format [R14]) involving sequential operation of the BAT and Blanket Tooling controllers (see figure above).

Mobile C&C

For the Skid Mode, a C&C is required to run on a robust mobile handheld device to allow a local operator to operate the Blanket Tooling that is installed on the VV wall.

The handheld device shall have wireless communication with the Skid remote controller. The handheld device shall include an emergency stop button to trip the system into the safe state.

The mobile C&C shall run on the handheld device and provided the functionality required to operate the Blanket Tooling System (End-Effector and Tools).

The mobile C&C HMI shall be designed taking into account human factors engineering.

The mobile C&C shall take into account that the operators will be wearing light gloves in the Vacuum Vessel.

Figure 129. Example of a robust mobile robot control device

SUPPLY

Cubicle Remote Controller

The Blanket Tooling System shall include a Cubicle Remote Controller for controlling the end-effectors when they are attached to the BAT (Transporter Mode).

The function of the Cubicle Remote Controller shall be:

- Provide interfacing with the C&C HMI,
    - Periodic sending of status data to HMI,
    - Processing of HMI commands.
- Run a Tooling State Machine,
    - Manage the overall tool functionality (motions and tool process)
- Provide interfacing with the actuator drivers (embedded in End-Effectors).
    - Sending motion commands and monitoring sensor data via EtherCAT
- Implementing an Emergency Stop circuit
    - Trip and reset from the controller
    - I/O for tripping by external protection systems.

The Cubicle Remote Controller shall be built for installation in a standard CODAC cubicle.

It is expected that the Cubicle Remote Controller will be fitted into a BAT cubicle and will get connections to AC power and RH networks from the BAT cubicles.

Skid Remote Controller

The Blanket Tooling System shall include a Skid Remote Controller for controlling the end-effectors and tooling when installed on the VV wall (Skid Mode).

The function of the Skid Remote Controller shall be:

- Provide interfacing with the C&C HMI,
    - Periodic sending of status data to HMI,
    - Processing of HMI commands.
- Run a Tooling State Machine,
    - Manage the overall tool functionality (motions and tool process)
- Provide interfacing with the actuator drivers (embedded in End-Effectors).
    - Sending motion commands and monitoring sensor data
- Implementing an Emergency Stop circuit
    - Trip and reset from the controller
    - I/O for tripping by external protection systems.
- Provide interfacing with Tooling process controllers (e.g. welding controllers).

The Skid Remote Controller shall support both hardwired Ethernet communication and wireless Ethernet communication with the C&C.

The Skid Remote Controller shall utilize the same hardware as the Cubicle Remote Controller.

The Skid Remote Controller shall be installed in the Blanket Tooling Skid module.

The Blanket Tooling Skid module shall include Tooling Controllers specific to the tooling processes being deployed. It is assumed that these will be COTS products. In some cases, such as with welding tools, power and signals might be directly connected to the tool instead of routing through the tool changer and the embedded controller on end effector.

End-Effector Local Controllers

Local Controllers shall be developed for each of the Blanket Tooling End-Effectors.

The End-Effector Local Controllers shall control the motions of the specific End-Effector and Tooling (where applicable).

SUPPLY

The End-Effector Local Controllers shall support the interfacing of VoIP cameras. The Ethernet uplink shall connect to the BAT Vision System.

Communication with the End-Effector actuator drivers shall be using EtherCAT.

The Local Controller components will depend on the specifics of each end-effector. An indicative local controller based on Beckhoff products is indicated in the schematic below.

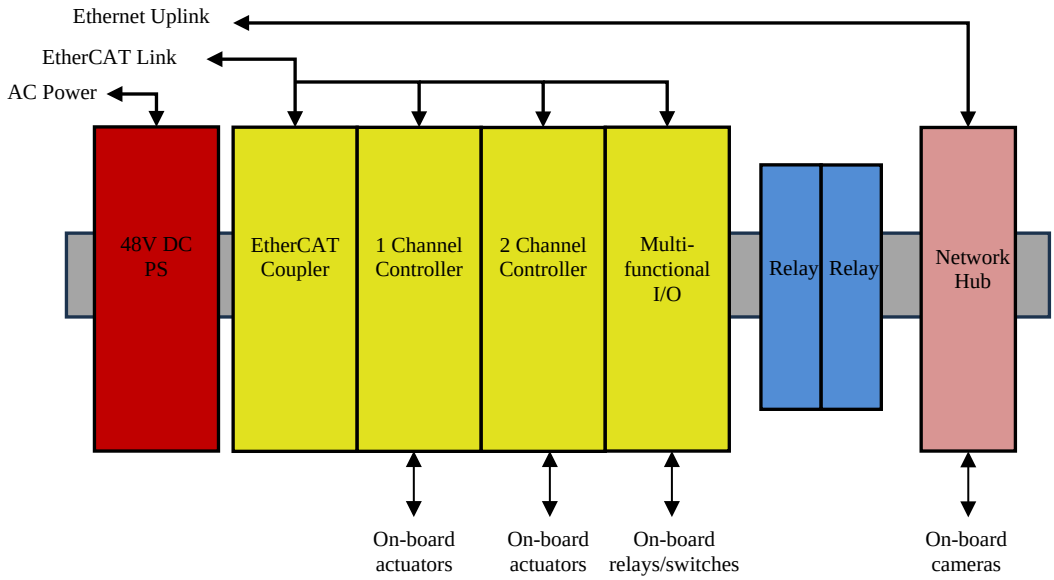

Figure 130. Sample End-Effector Local Controller

4.3.3 Control System Scope and Indicative Bill of Materials

The following tables are to provide clarity over the scope of the control system components.

	Transporter Mode	**Skid Mode**	
	Control Container	**Control Container**	**Mobile Device**
High-Level Control System			
C&C	IO (JADA provide for FAT)	IO (JADA provide for FAT)	JADA
OMS	IO	IO	-
Viewing	IO	IO	-
Virtual Reality	IO	IO	-
Low-Level Control System			
Cubicle	BAT	JADA (in Skid)	
Remote Controller	JADA	JADA	
Local Controller	JADA provides local controller in each EE		

Table 10. Scope of the supply of different control system elements for operating EE

SUPPLY

Indicative Bill of Materials

Command & Control HMI		
Personal Computer plus Emergency Stop button		
Rugged Mobile Computer with built-in Emergency Stop button		
Command & Control Software application		
Cubicle Remote Controller		
DC power supply	24V DC TBD	1
Processor board	Beckhoff CX8110*	1
Emergency Stop circuit		
Controller Software application		
Skid Remote Controller		
DC power supply	24V DC TBD	1
Processor board	Beckhoff CX8110*	1
Wireless access point	TBD	
Emergency Stop circuit		
Controller Software application		
Tooling Process Controller(s)		
SBG Local Controller (embedded in EE)		
DC power supply	48V DC TBD	1
EtherCAT coupler	Beckhoff EK1100	1
Axes Drivers	Beckhoff EL7xxx series	TBD
Multifunctional I/O	Beckhoff Elxxxx series	1
Ethernet switch port	GigaConcept TSW304	1
FBT Local Controller (embedded in EE)		
DC power supply	48V DC TBD	1
EtherCAT coupler	Beckhoff EK1100	1
Axes Drivers	Beckhoff EL7xxx series	TBD
Multifunctional I/O	Beckhoff Elxxxx series	1
Ethernet switch port	GigaConcept TSW304	1
SBTB Local Controller (embedded in EE)		
DC power supply	48V DC TBD	1
EtherCAT coupler	Beckhoff EK1100	1
Axes Drivers	Beckhoff EL7xxx series	TBD
Multifunctional I/O	Beckhoff Elxxxx series	1
Ethernet switch port	GigaConcept TSW304	1
15NDG Local Controller (embedded in EE)		
DC power supply	48V DC TBD	1
EtherCAT coupler	Beckhoff EK1100	1
Axes Drivers	Beckhoff EL7xxx series	TBD

SUPPLY

Multifunctional I/O	Beckhoff Elxxxx series	1
Ethernet switch port	GigaConcept TSW304	1
15NDTB Local Controller (embedded in EE)		
DC power supply	48V DC TBD	1
EtherCAT coupler	Beckhoff EK1100	1
Axes Drivers	Beckhoff EL7xxx series	TBD
Multifunctional I/O	Beckhoff Elxxxx series	1
Ethernet switch port	GigaConcept TSW304	1
FWG Local Controller (embedded in EE)		
DC power supply	48V DC TBD	1
EtherCAT coupler	Beckhoff EK1100	1
Axes Drivers	Beckhoff EL7xxx series	TBD
Multifunctional I/O	Beckhoff Elxxxx series	1
Ethernet switch port	GigaConcept TSW304	1
FWCBT Local Controller (embedded in EE)		
DC power supply	48V DC TBD	1
EtherCAT coupler	Beckhoff EK1100	1
Axes Drivers	Beckhoff EL7xxx series	TBD
Multifunctional I/O	Beckhoff Elxxxx series	1
Ethernet switch port (DIN rail)	GigaConcept TSW304	1
Cabling		
Cabling from Cubicle Remote Controller to BAT Tool Changer connector		
Cabling from Skid Remote Controller to Tool Changer connector (umbilical)		
End-Effector on-board cabling from local controllers to I&C components.		
End-Effector on-board cabling for Tool I&C components (SBTB & 15NDBT EE's)		
Power cable to connect Skid to power outlet.		
Network cable to connect Skid to RH networks (via CODAC Network Panel)		
Spares		
Spares shall be provided to cover 2 years of operation		
Measurement and test equipment		
Measurements and test equipment needed for the maintenance of the system shall be defined by the supplier and provided as part of the procurement.		

Table 11. Indicative Bill of Materials for Blanket Tooling Control System

* The Beckhoff processor and hardware have been identified as indicative components. However, the IO would like to have a standard approach between the Blanket Tooling and the

BAT (not defined yet). The Contractor shall work with the IO to agree the final selection of the processor board. The operating system will be determined by the hardware chosen.

4.4 Production of final End Effectors, Tools and I&C systems

This task shall comprise the following points:

- Execution of the manufacturing design
- Procurement of materials, parts and components
- Manufacture of the parts and components
- Identification, inspection and dimensional control of parts and components
- Assembly and inspection/dimensional control of assembled sub-systems and equipment
- Formal inspection, dimensional control and functional testing of the “stand-alone” subsystems
- Interface compliance checking with the Tool Changer and its electrical connector
- Producing manufacturing reports.
- Producing FAT procedure
- Producing SAT procedure

4.5 Factory Acceptance Tests

- Factory Acceptance Testing (FAT)
  - Tests based on FAT plan established in section 4.4
- Labelling, cleaning, packaging, handling, shipment and storage
- Shipping to IO site

Given the FOAK nature of the project, while JADA and their contractor will make reasonable efforts to achieve the expected performance of the delivered products, specific outcomes (e.g., weld quality) in the actual execution cannot be guaranteed. If the implementation based on this technical specification and IO-approved drawings does not meet the expected performance, IO and JADA will discuss potential revisions to the technical specification, including any additional time & cost required.

4.6 Site Acceptance Tests

The Site Acceptance Tests (SAT) are a subset of the FAT tests, described in section 4.5, using the same test equipment as practically possible.

Since the SAT tests are performed on IO site, JADA shall send test equipment used during FAT testing. This provision requires the jigs manufactured for FAT to be sent to IO, but those that form part of the supplier’s infrastructure and cannot be easily removed are not subject to shipment.

<u>Out of scope for JADA, shared for information only:</u>

After the formal SAT, additional tests will be performed on IO site to test the Blanket Assembly Tooling components with testing equipment that will have been manufactured and/or set up in the basement of Building 22 (TAP building), such as the Heavy-Duty Robot or Shield Block mock-up, etc.

Next, the Blanket Assembly Tooling equipment will be transferred to the main assembly contractor for them to use with BAT at their premises. This stem is part of the BAT FAT tests.

SUPPLY

5 Location for Scope of Work Execution

Until finishing the FAT tests, JADA can perform the work at their own location.

SAT tests are to be performed on IO site.

6 IO Documents & IO Free issue items

On demand, IO will share all 3D data of the concept designs created by IO in-house, related to Blanket Assembly Tooling.

No free issue item is expected from IO

7 Deliverables and Schedule Milestones

7.1.1 Schedule for delivery

The following list specifies the indicative quantity of final production units to be manufactured and delivered to IO. The final quantity shall be determined on an actual cost basis, ensuring that the portion converted from the existing BRHS PA scope aligns with the initial assembly equipment.

SUPPLY

Indicative number of items to be shipped as final production units:

Description	Quantity*	Comment
End Effectors		
SBG	2	Including 1 spare from each variant, number of variants TBC
FBT	2	Including 1 spare
SBTB	See comment	The SBTB has modular design, with multiple module variants in some cases (e.g. shim). In general, every module variant must have at least 1 spare. When an SBTB is in operation inside the vessel, another SBTB is in reconfiguration outside the vessel for the next target SB.
15NDG	2	Including 1 spare
15NDTB	2	
FWG	2	
FWCBT	3	1 in operation, 1 in reconfiguration, 1 spare
Tools		
ESBT	3	Including 1 spare. 2 could be used at the same time by 2 Nacelle operators
VT	3	Including 1 spare. 2 could be used at the same time by 2 Nacelle operators
CCWT	2	Including 1 spare
CCCT	2	
MCAMT	2	
MCPT	2	
MCWT	2	
MCCT	2	
ECHT	3	Including 1 spare. 2 could be used at the same time by 2 Nacelle operators
ECWT	2	Including 1 spare
ECCT	2	
Auxiliary systems		
TSS	2	Including 1 spare
UHS	2	
UTC	20	Including spares. These are relatively cheap items and many will be used at the same time to fix the umbilical to the BMs.
TSR	4	Including 1 spare. 3 used at the same time in-vessel.
NTS	2	Including 1 spare

*Quantity to be supplied from each variant (if there are variants)

SUPPLY

Please find hereafter the expected high-level schedule:
JADA will provide their own detailed schedule separately from this document.

Schedule Milestones	Description	Expected Time
#1	Blanket Assembly Tooling First Batch	Q1 2028
#2	Blanket Assembly Tooling Final Production Units	Q1 2030

7.1.2 List of deliverable documentation

JADA shall provide IO with the documents and data required in the list below.

Technical Design Family	Document Title	Further Description	Expected Time
Design Description Document	Design Description Document	Description of tools and end effectors	For Design Approval
Quality Assurance	Quality Plan	-	After contract signature
Bill Of Material-BOM	CAD BOM	BoM of all assemblies, including list of COTS items, with suppliers indicated	For Design Approval
Assembly or Component Definition Drawing	Assembly Drawing	Assembly drawings of each End Effector, Tool and Auxiliary System	For Design Approval
Assembly or Component Definition Drawing	Component Drawing	Final manufacturing drawings	For Design Approval
Engineering Analysis and Calculation Report	Analysis Model	FEM model of all analyses that have been performed if FEM analysis is performed	For Design Approval
Engineering Analysis and Calculation Report	Structural Integrity Report	All analysis reports that have been created	For Design Approval
Electrical Diagram	Cabling Diagram-CBD	-	For Design Approval
Electrical Diagram	Detailed Wiring Diagram-WD	-	
Electrical Diagram	Single Line Diagram or One Line Diagram	-	

SUPPLY

Verification Report	Compliance Matrix - DCM or VCM	The DCM needs to be completed during/after the completion of FAT and SAT.	For Design Approval
Acceptance Plan	Factory Acceptance Test Plan-FATP	-	Before start of FAT
Acceptance Plan	Site Acceptance Test Plan-SATP	-	Before start of SAT
Acceptance Record or Report	Factory Acceptance Test Report-FATR	-	Before shipping
Acceptance Record or Report	Site Acceptance Test Report-SATR	-	For acceptance
Operation and Maintenance Manual	Equipment Operation and Maintenance Manual	Including assembly manual in sub-assembly level component	Before start of FAT
Operation and Maintenance Manual	Software User Manual-SUM	-	Before start of FAT
Release Note	Release Note	Suggested templates for Release Note (QVEKNQ_v3.1)	Before shipping

8 Overarching requirements

8.1 Quality Assurance requirements

The Quality class for Blanket Assembly End Effectors and Tooling is QC3 for both First Batch of Tooling and Tooling Production Units for pre-SRO. Specific QA requirements are defined based on Appendix 2 of Quality Classification Determination (ITER_D_24VQES v6.0) as follows.

- Design Control
  - Simplified design reviews will be conducted as specified in 9.1 in regular meetings and in IDM review process. Independent verifications are not required.
- Software Control & Models Development
  - IO acceptance of software and models for design and operation is not required.
- Procurement / Documents and Records
  - Suppliers' Quality plans are required from JADA's direct contractors. Exemption requests shall be submitted to the QARO regarding the subcontractors' QP on a case-by-case basis.
  - Factory Acceptance Test (FAT) and Site Acceptance Test (SAT) plans shall be submitted to IO. Inspection and Test Plan are not required.
  - The Release Note is required to be submitted to IO before shipping.
  - Declaration of compliance to directives specified in 3.3 is required. Static load test results in FAT for grippers shall be submitted. Material certificates are required for key materials (e.g. wrench made of maraging steel).
- Manufacturing Assembly & Installation / Inspection & Testing
  - Simplified Manufacturing Readiness Review (MRR) will be conducted in the regular technical meetings as needed as specified in 9.1.

  - The application and grade approach of quality control levels are described in IO specific procedure (ITER_D_TVL3Y5 v2.0). Supplier Reliability is to be evaluated by JADA and submitted to IO. In case of QSL 4, there is no specific intervention point or hold point to be applied.
- Quality Audits
  - The application of quality control level is described in IO specific procedures (ITER_D_TVL3Y5 v2.0).
  - IO's quality audits to the suppliers / contractor site are not required if the supplier is certified under ISO 9001 or equivalent.
- Handling, Storage, & Transportation
  - The products delivery shall start only after contractor's release note and shipping notification are accepted by IO.
  - Products shall be properly packaged. Desiccants and accelerometers shall be included in the packages as needed.
  - There is no specific transportation and storage requirement to be applied. Storage and preservation activities in IO's site are not required by JADA.
  - Inspections and verifications to the products (sampling methods) are not required at reception time.
- NCR & DR Control
  - All major NCR's related to ITER project issued by JADA and its suppliers shall be submitted to IO for review and acceptance in accordance with IO procedure.
  - For all major NCR's related to ITER project, a root cause analysis shall be issued by the DA's / suppliers / contractors and approved by IO.
  - Any minor NCR's related to ITER project by JADA and its suppliers do not require submission to and review of IO.
  - All the Deviation Request (DR) will be submitted to IO / JADA for review and approval before implementation.
- Risk and Opportunity Management
  - IO regular risk and opportunity management process including training activities related to the process is not required. However, risks shall be registered in the Project Risk and Opportunity Register (PRR).

8.2 Nuclear class Safety

Not applicable. Radiation hardness nor decontamination is not required for initial assembly tools and end effectors.

8.3 Seismic class

No specific safety requirement related to PIC and/or PIA and/or PE/NPE components apply. Seismic assessment is not required for initial assembly tools and end effectors.

9 Special Management requirements

9.1 Review meetings

Simplified FDR and MRR will be performed on the submitted documents via the IDM system, and discussions will take place during regular meetings as needed. Manufacturing activities may commence upon the approval of the documents according to the simplified MRR procedure, such as the following documents:

- Design Description Document

SUPPLY

- Drawings
- CAD model / Bill of Materials

9.2 CAD design requirements

The CAD models, 2D drawings and electrical diagrams and etc. shall be provided in STEP or CATIA and in their native format. Pdf of the 2D drawings shall also be provided. Along with the CAD model, a Bill of Materials (BOM) for all assemblies, including a list of COTS items, shall be submitted. Change management for CAD model is not required.

10 Appendices

No appendices

Requirements document for End Effectors and Tools to be used for the First Assembly of Shield Blocks and Temporary First Walls

How to use this document:

1. In order to find the requirements for a specific EE or Tool, column "Scope" on the Requirements tab shall be filtered.
2. If the component is an EE, the name of the specific EE, "All EEs" and "All EEs & Tools" shall all be selected from the list when filtering.
3. If the component is a Tool, the name of the specific Tool "All Tools" and "All EEs & Tools" shall all be selected from the list when filtering.

Explanation for requirement "Importance" collumn

Expected: A requirement that should be present in the proposed solution, but its absence would not disqualify the solution.
Mandatory: The solution must comply with the requirement.

Background:

The requirements listed in this document are specifically targeting First Assembly, which means that there are no requirements related to nuclear environment. Also, it is taken into account that at this stage, light duty operations can be performed manually by an operator, which reduces the effort and cost.

During the creation of this list, the document in RD1 has been checked, but it contains requirements related to the nuclear stage and ones related to obsolete designs. Thus, in case of conflict, the current requirements document supersedes the content of RD1.

RD1: ITER_D_872ZLZ v1.0 - WG05 BRHS Tooling Requirements Master Spreadsheet

Nr.	Scope	Requirement	Target value	Tolerance	Importance	Comments
1	All EEs & Tools	The state and/or position of each function shall be monitored by sensors in case of automated processes.	n/a	n/a	Mandatory	
2	All EEs & Tools	Visual indicators shall be used for hands-on operated motions (engravements,marks, flags, etc.).	n/a	n/a	Mandatory	
3	All EEs & Tools	Tools & EEs shall be designed in such a way that there will be no risk of losing or dropping of any object during handling or operation inside the vessel. End Effectors are secured by Tool Changer interface. Tools are secured by zero G arm Tool Changer. Additional hand tools shall be secured by a tether. Exposed bolts shall have a design that prevents bolt loosening (e.g. Loctite, SpiraLock, NordLock, wires,...)	n/a	n/a	Mandatory	
4	All EEs & Tools	The used materials shall comply with the following specifications: - For structures and bolts: Stainless steel, Aluminium Bronze or Aluminium shall be preferred. Maraging steel is authorized for the wrenches of the torquing tools. Carbon steel is authorized only with corrosion prevention coating or painting and in locations where the carbon steel parts are not exposed to direct friction contact with the in-vessel component. - FKM (Viton) or EPDM seals	n/a	n/a	Mandatory	
5	All EEs & Tools	Lubrication shall be done in an enclosed volume, protected with sealing, taking into account the followings: - The use of oil is not permitted. Any potential use case shall be agreed by IO, if its use cannot be avoided. - One seal for grease can be allowed only if the possibility of grease leakage is very low, otherwise double containment is mandatory. If grease is injected into the part , double containment shall be done. If vacuum grease is applied as a thin layer, single containment is acceptable. In case the lubrication cannot be done in an enclosed volume, surface coating such as Diamond Like Coating (DLC) or dry lubrication solution such as S-compound film shall be used.	n/a	n/a	Mandatory	
6	All EEs & Tools	The enveloping dimensions of the EEs and Tools shall be limited in order to fit within the bigger storage boxes that transfer items to in-vessel.	LxWxH: 2100x1310x665	maximum	Mandatory	
7	All EEs & Tools	If technically feasible, the enveloping dimensions of the EEs and Tools shall be limited in order to fit within the smaller storage boxes that transfer items to in-vessel.	LxWxH: 2100x1310x460	maximum	Expected	
8	All EEs & Tools	All locking functions of EEs and Tools shall remain locked in case of a power/service failure.	n/a	n/a	Mandatory	
9	All EEs & Tools	Torquing tools (ESBT), EEs with torquing functions (FBT, FWCBT) and cutting tools (CCCT, MCCT, ECCT) shall be able to move in both directions for recovery in case the tool jams.	n/a	n/a	Mandatory	
10	All EEs & Tools	Torquing tools (ESBT) and EEs with torquing functions (FBT, FWCBT) shall be able to release the torque applied to the wrench.	n/a	n/a	Mandatory	
11	All EEs & Tools	Torquing tools (ESBT) and , EEs with torquing functions (FBT, FWCBT) shall be designed to allow no less than 10 cycles before tool requires a re-calibration. Torque deviation outside the tolerance values (±10%) requires recalibration.	n/a	n/a	Mandatory	
12	All EEs & Tools	EEs that have automatically engaged wrenches (SBG, 15NDG, FWCBT) shall have a position feedback function to confirm that the wrench tip is fully engaged with the bolt socket before torquing operation starts.	n/a	n/a	Mandatory	
13	All EEs & Tools	Welding processes for Blanket modules and tooling shall be qualified according to: - EN ISO 15609-1, Specification and qualification of welding procedures for metallic materials: Welding procedure specification Part 1: Arc welding - EN ISO 15614-1, Specification and qualification of welding procedures for metallic materials - Welding procedure test - Part 1: Arc and gas welding of steels and arc welding of nickel and nickel alloys (ISO 15614-1:2003) Preparation and qualification of the WPS for in-VV welding are outside the scope of JADA. JADA will conduct welding trials using test samples and weld quality assessment as part of the verification of the manufactured equipment.	n/a	n/a	Mandatory	
14	All EEs & Tools	All local heat sources or any sources of electrical arcs and sparks generated by the Blanket Tooling that may cause fire risk shall be identified. As a consequence of identification of possible local heat sources sufficient to cause fire, the measures to mitigate such risk shall be defined.	n/a	n/a	Mandatory	
15	All EEs	Shield Block EEs shall mimic the interfaces of the First Wall, if possible.	n/a	n/a	Expected	
16	All EEs	EEs should use pressing pads to provide a more rigid connection to the Component. Pads can be active or passive (spring loaded or static) but they shall be the primary support point for the EE.	n/a	n/a	Expected	
17	All EEs	EE interfaces with the Shield Block shall be generic for all EEs, with minimum number of variants.	n/a	n/a	Mandatory	
18	All EEs	The mechanical locking state of the EE (except for FWCBT, which is not locked to the FW) to the in-vessel component (SB, FW, etc.) shall be monitored.	n/a	n/a	Mandatory	
19	All EEs	In the case of grippers (FWG, SBG), the mechanical locking between the gripped Component (SB or FW) and the in-vessel component to which it is installed (VV or SB) shall be monitored.	n/a	n/a	Mandatory	
20	All EEs	In the case of grippers (FWG, SBG), functions related to gripping the target in-vessel component (wrench/gripper engagement), functions related to fixing the component in-vessel (CB or ES bolt torquing) and functions related to reconfiguring the gripper for a new target component (wrench/gripper shifting) shall be automatized and controlled from the RH control room.	n/a	n/a	Mandatory	
21	All EEs	Every function of the EE, that may lead to the impossibility to safely remove the EE in case of failure (should the control system or the mechanical system fail) shall be equipped with manually actuated recovery means, so that it can be removed by the BAT.	n/a	n/a	Mandatory	

22	All EEs	EE shall have an interface enabling to connect to the Tool Side of the Tool Changer.	n/a	n/a	Mandatory
23	All EEs	The Tool Changer tool side shall be fixed to the symmetry plane of the EE when feasible, concentrically with the Central Barrel. When not feasible, the Tool Changer tool side shall be on the lateral side (lateral when aligned with the target component (SB or TFW)).	n/a	n/a	Expected
24	All EEs	If technically feasible, the EE design shall include the possibility of being grabbed by the BAT from both lateral sides (lateral when aligned with the target component (SB or TFW)). There are two options for this: 1. The EE is symmetrical and it can be flipped. 2. The EE has two Tool Changers or at least Tool Changer fixing brackets on both sides.	n/a	n/a	Expected
25	All EEs	EE functions shall be modular, so that the EE can be reconfigured for specific targets. As much as possible, the EE shall be standardized.	n/a	n/a	Expected
26	All EEs	The connection between the EE and the Tool Changer tool side shall be as stiff as possible (e.g. without the introduction of spring mechanisms) in order to have precise control over the position of the EE tip.	n/a	n/a	Mandatory
27	All EEs	When the EE is fixed to a vessel component (SB, FW) the following shall apply: 1. Those functions, that need to be set once (e.g. TFU positioning) shall be hands-on operations, without automatization. 2. Periodic motions and recurring functions (such as tool rotation) shall be motorized. These automated functions shall be controlled by an operator nearby (on the Nacelle) via a screen or keypad interface with sensory feedback.	n/a	n/a	Expected
28	All EEs	Those EE functions that are needed for positioning and fixing the EE to its working position on the SB/FW shall be controlled from RH control room whilst being connected to the General EE.	n/a	n/a	Mandatory
29	All EEs	All EEs shall be designed so that they only have one connector for each service type (control, sensing, air, gas, etc.) at the Tool Changer connector.	n/a	n/a	Mandatory
30	All EEs	Local distribution of services towards the embedded drive units of the EE shall be made within the EE itself, using an embedded controller box.	n/a	n/a	Mandatory
31	All EEs	To avoid any cable entanglement risk, dynamic cables shall be either routed through cable chains or covered by protective covers. Non-mobile cables shall be attached to the Tool Base along their routing.	n/a	n/a	Mandatory
32	All EEs	The grouped main services line shall connect to the automatic connector of the Tool Changer tool side. Then, the services shall be routed to the embedded controller within the EE. This embedded controller shall have a sufficient number of sockets to provide services to Tools.	n/a	n/a	Mandatory
33	All EEs	Welding current shall be fed to the Tool directly either from the automatic connector of the Tool Changer Tool side, or the welding power cable shall be branched off of the bundle coming from the UHS to bypass the automatic connector and connect to the Tool directly. Routing through the Embedded Controller shall be avoided.	n/a	n/a	Mandatory
34	All EEs	Two robot vision cameras including lights shall be installed on every EE, with relative configuration specific to each EE. Detailed reference document: TBD	n/a	n/a	Mandatory
35	All EEs	The weight of all EEs shall be limited.	1 ton	maximum	Mandatory
36	All EEs	The weight of all EEs, whose purpose is to carry in-vessel components (i.e. Grippers) shall be further limited.	500 kg	maximum	Mandatory
37	All EEs	The torsional moment applied by the EE to the General EE tool roll axis shall be limited.	7.5 kNm	maximum	Mandatory
38	All EEs	Tool Bases (SBTB, 15NDTB) shall not obstruct backgas channel openings near CC or MC access holes for any SB. All SB designs shall be investigated, backgas holes shall be located and the Tool Base designs shall be adapted to provide clear access.	n/a	n/a	Mandatory
39	All EEs	The following EEs shall share the same connecting interfaces with the SBs: SBG, SBTB, FBT, TSR. This shall consist of static keys and a Central Clamping Mechanism interface to fix the EE to the SB.	n/a	n/a	Mandatory
40	All EEs	The EEs defined in RQ38 shall fit with the SB central hole for centralization, via a Central Barrel interface, with a reasonable gap between the barrel and the SB hole. Attention shall be paid to the fact that Shield Block rows 3-5,7-9,14-17 have a diam. 180 mm central hole, whereas Shield Block rows 1,2,6,10-13,18 have a diam. 190 mm central hole.	proposed gap: 1.0 mm	0/+0.5 mm	Mandatory
41	All EEs	The EEs defined in RQ38 shall connect to the Central Bolt insert of the SB, via a Central Clamping Mechanism embedded in the Central Barrel assembly.	M64x4	n/a	Mandatory
42	All EEs	The Central Clamping Mechanism of the EEs defined in RQ38 shall engage with the CB insert thread by clamping and a pulling load (preload) shall be applied to the clamping head. All of this shall be done by a mechanism integrated into the SBG.	pulling force TBD	tolerance TBD	Mandatory
43	All EEs	The Central Clamping Mechanism of the EEs defined in RQ38 shall be fully retractable to the Central Barrel interface.	n/a	n/a	Mandatory
44	All EEs	The locking interface of the EEs defined in RQ38 shall aim to avoid or minimize any damage to the SB M64x4 threaded insert. There are several options for this, including but not limited to: reduced engagement length (with respect to final FW CB connection); Central Clamping Mechanism made of softer material; smart choice of Central Clamping Mechanism thread tolerance to provide more clearance; DLC coating of Central Clamping Mechanism thread to provide lubrication.	n/a	n/a	Mandatory
45	All EEs	For positioning the EEs defined in RQ38 onto the SB, the EE shall have static keys interfacing with the FW pipe grooves of the SB.	n/a	n/a	Mandatory
46	All Tools	The mechanical locking state of the Tool to the EE and to the in-vessel component (VV, SB, FW, etc.) shall be monitored.	n/a	n/a	Mandatory
47	All Tools	Every function of the Tool, that may lead to the impossibility to safely remove the Tool in case of failure (should the control system or the mechanical system fail) shall be equipped with manually actuated recovery means, so that it can be removed by the BAT.	n/a	n/a	Mandatory
48	All Tools	The connection between the Tools and Tool Fixing Units (TFU) shall be standardized as much as technically feasible. Also, it shall be isostatic and repeatable for tools exchange accuracy.	n/a	n/a	Expected

49	All Tools	Centre of gravity of the tool shall be as close to the zero G arm tool changer axis as practically achievable, so that when the operator is handling the tool the moment is minimized.	n/a	n/a	Expected
50	All Tools	Tools and their gripping features (for the zero G arm and for handling) shall be designed so that an operator can compensate the moment load generated from the CoG being at an offset from the tool changer of the zero G arm.	n/a	n/a	Mandatory
51	All Tools	Light tools shall have guiding structure for insertion into the TB. (e.g. The tool tip tapered. The welding tool's electrode shall not contact TB.)	n/a	n/a	Mandatory
52	All Tools	Tools shall be designed with fixation features/interfaces to store on the Tool Storage Rack (TSR) and Nacelle Tool Storage (NTS) interface	n/a	n/a	Mandatory
53	All Tools	Tools shall be equipped with ergonomic handling features to be safely grabbed and carried by an operator and/or attached to a zero G arm.	n/a	n/a	Mandatory
54	All Tools	Weight of the tool shall be limited, so that it can be operated manually.	40 kg	maximum	Mandatory
55	All Tools	Very light tools shall not be designed to be compatible with load compensation devices. These tools shall be handled manually.	approx. 3 kg	maximum	Mandatory
56	All Tools	Tools shall be designed so that they have one connector for each service type. The design of the Tool shall include the distribution of these services, if necessary.	n/a	n/a	Mandatory
57	All Tools	Service connections between the Tool & EE shall be grouped for minimum number of automated or hands-on connectors.	n/a	n/a	Mandatory
58	All Tools	Welding Tools (CCWT, MCWT, ECWT) shall include Arc Voltage Control (AVC) and Touch-Start system	n/a	n/a	Mandatory
59	All Tools	Welding Tools (CCWT, MCWT, ECWT) shall provide shielding gas to the welding torch.	n/a	n/a	Mandatory
60	All Tools	Backgas channels of the SB shall be used to provide backgas to the CC and MC joints.	n/a	n/a	Expected
61	All Tools	The welding tools (CCWT, MCWT, ECWT) shall have necessary insulation to prevent unwanted arcing.	n/a	n/a	Mandatory
62	All Tools	The welding tools (CCWT, MCWT, ECWT) shall have the ability to tack weld and to start from any tangential position.	n/a	n/a	Mandatory
63	All Tools	The welding tools (CCWT, MCWT, ECWT) shall be passively cooled by ambient air.	n/a	n/a	Mandatory
64	All Tools	For cutting tools related to CC and MC cutting (CCCT, MCCT), cut faces that are to be used for re-welding shall be suitable in terms of suface roughness and accuracy for re-welding directly or following a mechanical treatment.	total runout: 0.05 roughness in radial dir.: Ry 2.5	TBC	Expected
65	All Tools	Cutting tools (CCCT, MCCT, ECCT) shall be equipped with hard limits to avoid damage from the contact of the tool head against the pipe end. After the cutters have cut through, the operation will be stopped by control, but in case it was not, hard stops shall prevent further motion of the cutter in order not to damage the Tool or SB or etc.	n/a	n/a	Mandatory
66	All Tools	Cutting tools (CCCT, MCCT, ECCT) shall be equipped with feedback from the required cutting force (e.g. by measuring output motor torque or current) and the cutting tool shall automatically stop if there is an unexpected rise in resistance as a result of stuck or broken tool.	n/a	n/a	Mandatory
67	All Tools	Cutting tools with saw or lathe-type cutters shall have the means to extract swarf from the cutting area. An internal vacuum channel shall lead from the cutter to the stationary Tool parts connected to the TFU, where a socket shall be included for connecting the suction hose of the Tool Base.	n/a	n/a	Mandatory
68	All Tools	Maximum quantity and nature of swarf shall be determined quantitatively and shared with IO.	n/a	n/a	Mandatory
69	All Tools	Alignment, welding and cutting tools (CCWT, CCCT, MCAMT, MCWT, MCCT, ECWT) shall be manufactured and assembled so that the distance between the TFU interface and the - displacement sensor for CCWT and MCAMT - swages for CCCT and MCCT - welding torch for MCWT and ECWT has a precise positional tolerance. This is important for alignment repeatability when an alignment measurement tool (CCWT or MCAMT) is replaced with another tool.	axial positional accuracy: 0.1 mm	n/a	Mandatory
70	Shield Block Gripper	The Shield Block Gripper is an EE. Thus, all generic EE requirements shall be applied to it.	n/a	n/a	Mandatory
71	Shield Block Gripper	The SBG shall have the same interfaces with the SB as other EEs connecting to regular SBs, as defined in RQ38.	n/a	n/a	Mandatory
72	Shield Block Gripper	The SBG shall be able to carry the heaviest SB.	4 tons	n/a	Mandatory
73	Shield Block Gripper	The SBG shall be equipped with one wrench on either side (2 in total) of the Central Barrel, to tighten the ES bolts. These wrenches shall be extendable and retractable to reach SB ES bolt sockets when the SB is in position.	n/a	n/a	Mandatory
74	Shield Block Gripper	The SBG shall be capable of torqueing both ESBs by wrench mechanisms integrated into the SBG.	240 Nm	±10 %	Mandatory
75	Shield Block Gripper	If technically feasible, the SBG shall be capable of applying final torque to the ESBs.	480 Nm	±10 %	Expected
76	Shield Block Gripper	The thread engagement length and tightening torque of the ESBs shall be monitored through the attachment process.	n/a	n/a	Mandatory
77	Shield Block Gripper	The ESB wrenches of the SBG shall be capable of moving towards and away from the Central Barrel to be able to handle more SB configurations with one SBG type. Naturally, if there is a SBG type that is dedicated to one specific SB type due to its irregular shape, the wrenches cna be at fixed positions.	n/a	n/a	Mandatory
78	Shield Block Gripper	The ESB wrench tip shall be designed so that it can pass through the SB M24 insert (minor diameter 20.75 mm) to access the SB ESB, without damaging the thread either by keeping a clearance during the engagement and torquing process and/or by having a layer of soft coating on the wrench shank (e.g. EPDM, aluminium)	tip diameter: 20 mm	maximum	Mandatory

79	Shield Block Gripper	The SBG variants shall be able to operate in an upside-down configuration, where the SBG is rotated by 180 degrees around the Central Barrel. This is to minimize the number of variants, to be able to handle SBs with close to symmetrical ESB positions (e.g. rows 14 and 15).	n/a	n/a	Mandatory
80	Shield Block Gripper	One SBG type shall be compatible with as many Shield Blocks as possible, without overcomplicating the design.	n/a	n/a	Expected
81	Shield Block Gripper	The Tool Changer tool side shall be installed onto the SBG so that its axis coincides with the axis of the Central Barrel but it is on the opposite side of the SBG structure.	n/a	n/a	Mandatory
82	Shield Block Gripper	The distance from the SBG Tool Changer Tool Side interface plane to the SB interface plane shall be limited, in order to keep the moment load on the General EE roll axis at accetable level	400 mm	maximum	Mandatory
83	FCB Torquing Tool Base	The Flexible Cartridge Bolt Torquing Tool Base (FBT) is an EE. Thus, all generic EE requirements shall be applied to it.	n/a	n/a	Mandatory
84	FCB Torquing Tool Base	The FBT shall have the same interfaces with the SB as other EEs connecting to regular SBs, as defined in RQ38.	n/a	n/a	Mandatory
85	FCB Torquing Tool Base	One FBT type shall be compatible with as many Shield Blocks as possible, without overcomplicating the design.	n/a	n/a	Expected
86	FCB Torquing Tool Base	The FBT shall use a wrench, made of maraging steel grade 18Ni1900, to torque the FCBs to the required level	8.4 kNm	±10%	Mandatory
87	FCB Torquing Tool Base	The FBT wrench shank (the part between the wrench tip and the torque transducer) shall be a cylindrical rod.	n/a	n/a	Mandatory
88	FCB Torquing Tool Base	The Passive Holding System (PHS) shall be fixed to the FBT wrench tip.	n/a	n/a	Mandatory
89	FCB Torquing Tool Base	The FBT shall comprise a torque multiplier unit (e.g. GEDORE DVV-100ZRS) coupled with a motor (e.g. SHA-32A (gear ratio 101) harmonic drive) to apply torque on the wrench.	n/a	n/a	Mandatory
90	FCB Torquing Tool Base	A torque transducer shall be integrated between the torque multiplier and the wrench in order to measure the output torque directly. In case the transducers, that are available on the market, are deemed too big because they would clash with the arm, a smaller transducer can be used instead between the motor and torque multiplier.	accuracy: TBD	n/a	Mandatory
91	FCB Torquing Tool Base	The connection between the torque multiplier and its factory reaction arm is made via a cylidrical serrated feature. The factory reaction arm of the torque multiplier shall be removed and the FBT arm parts interfacing with the multiplier shall have a serrated hole to fit the serrated male feature of the torque multiplier.	n/a	n/a	Mandatory
92	FCB Torquing Tool Base	The arm of the FBT shall be capable of transfering the reaction torque to the Tool Base baseplate and eventually to the SB via the static keys interfacing with the SB front grooves.	8.4 kNm	±10%	Mandatory
93	FCB Torquing Tool Base	In case the full FBT assembly does not fit inside the Storage Box, the wrench, torque multiplier and motor shall be manually detachable from the end of the load bearing arm.	n/a	n/a	Expected
94	FCB Torquing Tool Base	The individually handled components to be installed to the FBT in-vessel (e.g. the unit comprising the wrench, motor and torque multiplier) shall have limited weight.	40 kg	maximum	Mandatory
95	FCB Torquing Tool Base	The individually handled components to be installed to the FBT in-vessel (e.g. the unit comprising the wrench, motor and torque multiplier) shall include interfacing features with the load compensation device (zero G arm).	n/a	n/a	Mandatory
96	FCB Torquing Tool Base	The FBT shall have one accessory, which is a simple handheld wrench. This wrench shall be used by an operator on a Nacelle as a bolting tool to engage the FCBs before the FBT is attached to the SB. FCBs shall be bolted to hand tightness (no prescribed torque). The wrench shall have engagement features with the FCB socket and the PHS on one end and a handle at the other end.	n/a	n/a	Mandatory
97	ES Bolt Torquing Tool	The Electrical Strap Bolt Torquing Tool (ESBT) is a Tool. Thus, all generic Tool requirements shall be applied to it.	n/a	n/a	Mandatory
98	ES Bolt Torquing Tool	The ESBT shall be compatible with the SB pocket side walls (the pocket for the TFW Electrical Strap) at the ES bolt access hole and with the TFW RH interface features (side wall of the RH interface insert or side wall of the opposite RH interface insert) to provide reaction torque. For the few SBs, where there is an offset between the SB ESB axis and TFW ESB axis, the ESBT can also make use of the SB grooves (for FW cooling pipes) as reaction feature. In the case of the 15 ND blocks, the ESBT key shall make use of the MC access holes as reaction features. Only the upper part of the MC access hole, aboce the EC lips shall be used for this.	n/a	n/a	Mandatory
99	ES Bolt Torquing Tool	The ESBT shall have a standard T80 torx end to engage with FW and SB ESBs	n/a	n/a	Mandatory
100	ES Bolt Torquing Tool	The ESBT wrench tip shall be designed so that it can pass through the M24 insert (minor diameter 20.75 mm) to access the SB ESB.	n/a	n/a	Mandatory
101	ES Bolt Torquing Tool	The PHS shall be added to the ESBT wrench tip.	n/a	n/a	Mandatory
102	ES Bolt Torquing Tool	The ESBT shall be able to provide the final torque to fix the ES by wrench mechanisms integrated into the ESBT.	480 Nm	±10%	Mandatory
103	ES Bolt Torquing Tool	The ESBT shall include a torque wrench and a torque multiplier (e.g. GEDORE DVV-13Z) with reaction features to interface with the SB and TFW. All of this shall be integrated into one assembly.	n/a	n/a	Mandatory
104	ES Bolt Torquing Tool	During positioning, after engagement with the ESB socket and during the torquing operation, the ESBT shall be held by a load compensation device (zero G arm). Thus, the ESBT design shall be optimized for constantly being held by the load compensation system (regardless of its weight) but operated manually.	n/a	n/a	Mandatory
105	Viewing Tool	The Viewing Tool (VT) shall be a handheld endoscope capable of performing visual inspection of CC, MC and EC joint areas before and after welding and cutting operations.	n/a	n/a	Mandatory
106	Viewing Tool	The endoscope camera head size shall be small enough to be able to access all the joints (CC, MC, EC) and inspect them from multiple angles.	n/a	n/a	Mandatory

107	Viewing Tool	The VT endoscope head shall have a demountable side viewing tip (e.g.: flexible/remotely driven insertion tube or right angle mirror) to look at CC and MC pipe joints.	n/a	n/a	Mandatory
108	Viewing Tool	The VT shall be capable of providing live HD (1080p or better) footage of the joints from the distance of a few millimetres.	n/a	n/a	Mandatory
109	Viewing Tool	The VT shall have manual focus fuction for the operator to set arbitrary view angles and inspect the joint thoroughly.	n/a	n/a	Mandatory
110	Viewing Tool	The cable of the camera shall be stiff enough to keep its shape after it is bent by the operator to provide better viewing angle.	n/a	n/a	Mandatory
111	Viewing Tool	The VT shall have its own light source with adjustable light intensity.	n/a	n/a	Mandatory
112	Viewing Tool	The VT shall be able to work continuously in an ambient temperature of up to 50 Celsius degrees.	n/a	n/a	Mandatory
113	Shield Block Pulling&Welding Tool Base	The Shield Block Pulling & WeldingTool Base (SBTB) is an EE. Thus, all generic EE requirements shall be applied to it.	n/a	n/a	Mandatory
114	Shield Block Pulling&Welding Tool Base	The SBTB shall have the same interfaces with the SB as other EEs connecting to regular SBs, as defined in RQ38.	n/a	n/a	Mandatory
115	Shield Block Pulling&Welding Tool Base	With the manual reconfiguration of the SBTB, SBTB should be designed to be compatible with as many Shield Blocks as possible, without making the design overly complex.	n/a	n/a	Expected
116	Shield Block Pulling&Welding Tool Base	The SBTB shall comprise one Tool Fixing Unit (TFU) that is compatible with the CCWT, CCCT, MCAMT, MCPT, MCWT, MCCT, ECWT, ECCT.	n/a	n/a	Mandatory
117	Shield Block Pulling&Welding Tool Base	The TFU of the SBTB shall be designed so that it can take up the load coming from the pulling mechanism of the CCWT or MCPT.	Nominal: 20 kN Maximum: 30 kN	n/a	Mandatory
118	Shield Block Pulling&Welding Tool Base	The TFU shall have a position adjustment mechanism in two directions within the plane perpendicular to the axis of the Coaxial Connector, allowing the TFU's tool mounting point to be aligned with the axis of the Shield Block hole.	coaxiality: 0.1 mm	maximum	Mandatory
119	Shield Block Pulling&Welding Tool Base	TBC: In case the Z vertical drive is not integrated into the Tools, the Tool Fixing Unit of the SBTB shall be capable of lowering and raising the Tools after the alignment has been set. This is to allow the distance measurement sensor to reach and scan the joint and then to switch from measurement to welding torch and align the torch with the joint.	vertical motion range: ±30 mm	minimum	Mandatory
120	Shield Block Pulling&Welding Tool Base	The SBTB TFU fixing features shall be designed so that they provide centralization for the Tools. This is needed when one Tool is replaced with another, but the target pipe joint remains the same (e.g. MCAMT replaced with MCWT). The coaxiality of two Tools fixed to the TFU in succession shall stay within limits.	repeatable coaxiality: 0.1 mm	n/a	Mandatory
121	Shield Block Pulling&Welding Tool Base	The SBTB design shall comprise a shim, placed between the SBTB plate and the SBTB TFU to align the TFU with the target pipe joint. Shim dimensions shall correspond to the CB-CC and CB-MC nominal angles. Before the SBTB is transferred into the vessel, it shall be reconfigured with the shim corresponding to the target SB.	13 shim angle variations	n/a	Mandatory
122	Shield Block Pulling&Welding Tool Base	The SBTB plate shall have multiple mounting poistions for the shims (and TFUs on top of them). The positions shall correspond to CC and MC positions on the SBs and shall enable the TFU to be used for fine position alignment only.	at least 5 positions: 1 for CC 2 for MCs of SB8 2 for MCs of SB18	n/a	Mandatory
123	Shield Block Pulling&Welding Tool Base	The SBTB shall be capable of providing services to the tools (current, shield gas, pressurized air (if needed)). For this, it shall have hand operated connectors, that are compatible with the Tools. Welding current and shield gas may be supplied directly to the tool without routing through the TB.	n/a	n/a	Mandatory
124	Shield Block Pulling&Welding Tool Base	On the SBTB, a small-size vacuum cleaner with dust container shall be integrated to be able to remove and store temporarily the swarf generated by cutting. The vacuum suction hose shall be able to connect to the appropriate Tool socket.	n/a	n/a	Mandatory
125	Coax. Conn. Welding Tool	The Coaxial Connector Welding Tool (CCWT) is a Tool. Thus, all generic Tool requirements shall be applied to it.	n/a	n/a	Mandatory
126	Coax. Conn. Welding Tool	The CCWT shall include a pipe alignment measurement system in order to measure the coaxiality of the welding head with respect to the SB hole with target accuracy. Alignment shall be performed by the SBTB TFU but controlled by the alignment measurement system of the CCWT.	coaxiality: 0.1 mm	maximum	Mandatory
127	Coax. Conn. Welding Tool	The CCWT shall have connecting features to the SBTB TFU, to which it must be locked rigidly after installation and before operation.	n/a	n/a	Mandatory
128	Coax. Conn. Welding Tool	The CCWT shall include a pipe pulling mechanism, with the purpose of removing the gap (and step) between the CC and the SB lip.	gap&step: 0 mm	0/+0.2 mm	Expected
129	Coax. Conn. Welding Tool	The pulling mechanism of the CCWT shall pull the CC by their dedicated internal slots, below the water inlet.	Nominal: 20 kN Maximum: 30 kN	n/a	Mandatory
130	Coax. Conn. Welding Tool	The pulling mechanism of the CCWT shall apply pulling force during the whole welding process to keep the gap and step between the CC and SB at an acceptable level.	gap&step: 0 mm	0/+0.2 mm	Expected
131	Coax. Conn. Welding Tool	The CCWT shall be able to cope with any angular CC slot (the feature at the bottom of the CC, which is used by the pulling head of the CCWT to apply the pulling force) alignment, because there is no guarantee that the slot will be vertical or horizontal, it will be aligned randomly.	n/a	n/a	Mandatory
132	Coax. Conn. Welding Tool	The CCWT shall include an optical measurement system to measure the gap and step between the CC and the SB lip.	resolution: 10 μm	maximum	Mandatory
133	Coax. Conn. Welding Tool	The welding head and distance measurement sensor of the CCWT shall be capable of rotation motion with respect to the stationary pulling mechanism.	400 degrees in both directions	minimum	Mandatory
134	Coax. Conn. Welding Tool	The cabling of the welding head and distance sensor shall allow the relative motion between the welding head and the stationary core. Cable management shall be taken care of within the encased volume of the CCWT.	n/a	n/a	Mandatory
135	Coax. Conn. Welding Tool	The CCWT shall get its services from the SBTB. Welding current and shield gas may be supplied directly to the tool without routing through the TB.	n/a	n/a	Mandatory
136	Coax. Conn. Welding Tool	The CCWT head shall fit through the diam. 70 mm opening of the SB. Thus, the diameter of the tool shall be limited.	ø 69 mm	maximum	Mandatory

137	Coax. Conn. Welding Tool	The CCWT welding torch shall be movable in the radial direction with respect to the Tool body to approach the CC pipe.	stroke: 17.5 mm	minimum	Mandatory
138	Coax. Conn. Welding Tool	The CCWT shall be capable of producing an autogenous full-penetration weld between the CC pipe and the SB lip using TIG welding.	ID: ø 101 mm thickness: 2.5 mm	n/a	Mandatory
139	Coax. Conn. Welding Tool	The CCWT welding head shall be designed so that welding can be perfomed in 3 depths. The 3 depths are: nominal joint position (as shown in assembly drawing), two subsequent positions after rewelding, with 7 mm offset for each towards the CC bottom side.	3 positions with 7 mm offset in between	n/a	Mandatory
140	Coax. Conn. Cutting Tool	The Coaxial Connector Cutting Tool (CCCT) is a Tool. Thus, all generic Tool requirements shall be applied to it.	n/a	n/a	Mandatory
141	Coax. Conn. Cutting Tool	The CCCT shall use swage cutter(s) to cut the CC outer pipe, in order to generate a cut profile that is compatible with rewelding.	n/a	n/a	Mandatory
142	Coax. Conn. Cutting Tool	The CCCT shall have connecting features to the SBTB TFU, to which it must be locked rigidly after installation and before operation.	n/a	n/a	Mandatory
143	Coax. Conn. Cutting Tool	The CCCT shall fit through the diam. 70 mm opening of the SB. Thus, the diameter of the tool shall be limited.	ø 65 mm	maximum	Mandatory
144	Coax. Conn. Cutting Tool	The CCCT shall be able to extend its swages in the radial direction to reach the CC pipe.	radial stroke: 21 mm	minimum	Mandatory
145	Coax. Conn. Cutting Tool	The CCCT shall be capable of doing cuts after welding and rewelding operations in 3 positions along the CC axis. The 3 positions are: nominal joint position (as shown in assembly drawing), two subsequent positions after rewelding, with 7 mm offset for each towards the CC bottom side.	n/a	n/a	Mandatory
146	Coax. Conn. Cutting Tool	The cutter feed rate shall be controlled during the whole cutting procedure.	feed rate TBD by testing	n/a	Mandatory
147	Coax. Conn. Cutting Tool	The CCCT shall be able to cut through the CC outer cylinder from inside the pipe.	ID 101 mm / thickness: 2.5 mm	n/a	Mandatory
148	Coax. Conn. Cutting Tool	The position of the cutter blade(s) and motor input current shall be monitored.	n/a	n/a	Mandatory
149	Coax. Conn. Cutting Tool	The CCCT shall have a Pipe Facing Tool as accessory, to be used after the SB is removed, to provide a surface that is appropriate for rewelding operations.	n/a	n/a	Mandatory
150	Monoax. Conn. Pulling Tool	The Monoax. Conn. Pulling Tool (MCPT) is a Tool. Thus, all generic Tool requirements shall be applied to it.	n/a	n/a	Mandatory
151	Monoax. Conn. Pulling Tool	The MCPT shall have connecting features to the SBTB and 15 NDTB TFU, to which it must be locked rigidly after installation and before operation.	n/a	n/a	Mandatory
152	Monoax. Conn. Pulling Tool	The MCPT shall include a pipe pulling mechanism, with the purpose of removing the gap (and step) betweenMC and the SB lip.	gap&step: 0 mm	0/+0.2 mm	Expected
153	Monoax. Conn. Pulling Tool	The pulling mechanism of the MCPT shall pull the MC by their dedicated internal slots, below the water inlet/outlet.	Nominal: 20 kN Maximum: 30 kN	n/a	Mandatory
154	Monoax. Conn. Pulling Tool	The MCPT shall be able to cope with any angular MC slot alignment, because there is no guarantee that the slot will be vertical or horizontal, it will be aligned randomly.	n/a	n/a	Mandatory
155	Monoax. Conn. Pulling Tool	The MCPT shall consist of a locking feature at the tip to engage with the internal slot of the MC and a shell structure that connects the locking mechanism with the tool head connecting to the TFU of the SBTB (or 15NDTB).	n/a	n/a	Mandatory
156	Monoax. Conn. Pulling Tool	The shell structure of the MCPT shall be free to rotate with respect to the locking mechanism, when the pulling force is applied.	n/a	n/a	Mandatory
157	Monoax. Conn. Pulling Tool	The MCPT shell shall be hollow to accommodate the MCAMT and MCWT tools. The MCPT shell shall rotate with the MCAMT and MCWT tools, but the interface between the MCPT and the tools shall allow the tool's relative axial movement (e.g. a spline shaft connection is recommended).	n/a	n/a	Mandatory
158	Monoax. Conn. Pulling Tool	The MCPT shell shall have appropriately positioned and sized openings to allow the MCAMT to scan the SB hole and the MC-SB joint and also to allow the MCWT welding torch to approach the joint without the possibility of a short-circuit between the torch and the MCPT cylinder.	n/a	n/a	Mandatory
159	Monoax. Conn. Pulling Tool	The MCPT opening shall be sized so that welding can be perfomed in 3 depths. The 3 depths are: nominal joint position (as shown in assembly drawing), two subsequent positions after rewelding, with 7 mm offset for each towards the MC bottom side.	3 positions with 7 mm offset in between	n/a	Mandatory
160	Monoax. Conn. Pulling Tool	The MCPT shell outer diameter shall be smaller than the SB hole diameter.	diam. 41 mm	maximum	Mandatory
161	Monoax. Conn. Pulling Tool	A mechanism shall connect the MCPT cylinder to the TFU, which shall be able to apply a puling force on the cylinder.	n/a	n/a	Mandatory
162	Monoax. Conn. Pulling Tool	Either the MCPT or the MCAMT and MCWT shall include a rotation mechanism with respect to the TFU. MCPT shall rotate together with the MCAMT and MCWT.	400 degrees in both directions	minimum	Mandatory
163	Monoax. Conn. Alignment Measurement Tool	The Monoax. Conn. Alignment Measurement Tool (MCAMT) is a Tool. Thus, all generic Tool requirements shall be applied to it.	n/a	n/a	Mandatory
164	Monoax. Conn. Alignment Measurement Tool	The MCAMT shall have connecting features to the MCPT, to which it must be locked rigidly after installation and before operation.	n/a	n/a	Mandatory
165	Monoax. Conn. Alignment Measurement Tool	The MCAMT shall fit within the cylinder of the MCPT.	n/a	n/a	Mandatory
166	Monoax. Conn. Alignment Measurement Tool	The MCAMT shall have an embedded axial drive meachansim, which allows axial movement of the MCAMT head with respect to the MCPT.	n/a	n/a	Mandatory
167	Monoax. Conn. Alignment Measurement Tool	The MCAMT shall include an optical measurement system to measure the gap and step between the Monoaxial Connector and the SB lip.	resolution: 10 μm	maximum	Mandatory
168	Monoax. Conn. Alignment Measurement Tool	Either the MCPT or the MCAMT shall include a rotation mechanism with respect to the TFU.	400 degrees in both directions	minimum	Mandatory
169	Monoax. Conn. Alignment Measurement Tool	The cabling of the distance sensor shall allow the relative motion between the TFU and the MCAMT. Cable management shall be taken care of within the encased volume of the MCAMT.	n/a	n/a	Mandatory
170	Monoax. Conn. Welding Tool	The Monoax. Conn. Welding Tool (MCWT) is a Tool. Thus, all generic Tool requirements shall be applied to it.	n/a	n/a	Mandatory
171	Monoax. Conn. Welding Tool	The MCWT shall be capable of producing an autogenous full-penetration weld between the MC pipe and the SB lip using TIG welding.	ID: ø 43.72 mm thickness: 2.5 mm	n/a	Mandatory
172	Monoax. Conn. Welding Tool	Either the MCPT or the MCWT shall include a rotation mechanism with respect to the TFU.	400 degrees in both directions	minimum	Mandatory

173	Monoax. Conn. Welding Tool	The cabling of the welding head shall allow the relative motion between the welding head and the TFU. Cable management shall be taken care of within the encased volume of the MCWT.	n/a	n/a	Mandatory
174	Monoax. Conn. Welding Tool	The MCWT shall get its services from the SBTB. Welding current and shield gas may be supplied directly to the tool without routing through the TB.	n/a	n/a	Mandatory
175	Monoax. Conn. Welding Tool	The MCWT shall have connecting features with the MCPT, to which it must be locked rigidly after installation and before operation.	n/a	n/a	Mandatory
176	Monoax. Conn. Welding Tool	The MCWT shall fit within the cylinder of the MCPT.	n/a	n/a	Mandatory
177	Monoax. Conn. Welding Tool	The MCWT shall include the AVC system which shall be used to approach the pipe with the welding torch, when the tool is in position.	n/a	n/a	Mandatory
178	Monoax. Conn. Welding Tool	The MCWT shall have an embedded axial drive meachansim, which allows axial movement of the MCWT head with respect to the MCPT.	n/a	n/a	Mandatory
179	Monoax. Conn. Welding Tool	The MCWT axial drive shall allow welding to be performed in 3 depths. The 3 depths are: nominal joint position (as shown in assembly drawing), two subsequent positions after rewelding, with 7 mm offset for each towards the MC bottom side.	3 positions with 7 mm offset in between	n/a	Mandatory
180	Monoax. Conn. Welding Tool	The MCWT welding torch shall be extendable radially to be able to pass through the window of the MCPT to approach the welding area.	stroke ~10 mm	n/a	Mandatory
181	Monoax. Conn. Cutting Tool	The Monoaxial Connector Cutting Tool (MCCT) is a Tool. Thus, all generic Tool requirements shall be applied to it.	n/a	n/a	Mandatory
182	Monoax. Conn. Cutting Tool	The MCCT shall use swage blade(s) to cut the MC pipe.	n/a	n/a	Expected
183	Monoax. Conn. Cutting Tool	The MCCT shall only be used after coaxiality of the TFU with respect to the SB hole has been set on the TFU, using the MCAMT.	coaxiality: 0.1 mm	maximum	Mandatory
184	Monoax. Conn. Cutting Tool	The MCCT shall have connecting features to the MCPT, to which the MCCT must be locked rigidly after installation and before operation.	n/a	n/a	Mandatory
185	Monoax. Conn. Cutting Tool	The MCCT shall fit within the cylinder of the MCPT.	n/a	n/a	Mandatory
186	Monoax. Conn. Cutting Tool	The MCCT cutter feed rate shall be controlled during the whole cutting procedure.	feed rate TBD by testing	n/a	Mandatory
187	Monoax. Conn. Cutting Tool	The MCCT shall be able to cut through the MC cylinder from inside the pipe.	ID: ø 43.72 mm thickness: 2.5 mm	n/a	Mandatory
188	Monoax. Conn. Cutting Tool	The position of the cutter blade(s) and motor input current shall be monitored.	n/a	n/a	Mandatory
189	Monoax. Conn. Cutting Tool	The distance between the MCCT cutting blade(s) and the tip of the tool shall be limited.	54 mm	maximum	Mandatory
190	Monoax. Conn. Cutting Tool	The MCCT head shall be designed so that cutting can be performed in 3 depths. The 3 depths are: nominal joint position (as shown in assembly drawing), two subsequent positions after rewelding, with 7 mm offset for each towards the MC bottom side.	3 positions with 7 mm offset in between	n/a	Mandatory
191	Monoax. Conn. Cutting Tool	The MCCT shall have a Pipe Facing Tool as accessory, to be used after the SB is removed, to provide a surface that is appropriate for rewelding operations. This Pipe Facing Tool can be the same as the one used for CC, only adapted to the smaller diameter.	n/a	n/a	Mandatory
192	End Cap Handling Tool	The End Cap Handling Tool (ECHT) is a Tool. Thus, all generic Tool requirements shall be applied to it.	n/a	n/a	Mandatory
193	End Cap Handling Tool	The ECHT shall be a simple rod with the 17 mm hexagon socket and the Passive Holding System on one end and a handling feature on the other end. This handling feature shall enable positioning and screwing of the EC.	n/a	n/a	Mandatory
194	End Cap Handling Tool	The EC shall be hand tightened only. No need for a specific torque, be this is not a structural connection, it is temporary until welding occurs	hand tightness (~10-20 Nm)	n/a	Mandatory
195	End Cap Handling Tool	In order not to lose alignment with the MC hole, the EC insertion shall be done with the SBTB still in position. Thus, the ECHT shall be long enough to reach the access hole with the handle sticking out of the SBTB TFU.	575 mm	minimum	Mandatory
196	End Cap Welding Tool	The End Cap Welding Tool (ECWT) is a Tool. Thus, all generic Tool requirements shall be applied to it.	n/a	n/a	Mandatory
197	End Cap Welding Tool	The ECWT shall have connecting features to the SBTB/15NDTB TFU, to which it must be locked rigidly after installation and before operation.	n/a	n/a	Mandatory
198	End Cap Welding Tool	The welding head of the ECWT shall be capable of rotation motion with respect to the stationary pipe alignment mechanism	400 degrees in both directions	minimum	Mandatory
199	End Cap Welding Tool	The ECWT shall get its services from the SBTB. Welding current and shield gas may be supplied directly to the tool without routing through the TB.	n/a	n/a	Mandatory
200	End Cap Welding Tool	The ECWT welding head shall include an AVC system.	n/a	n/a	Mandatory
201	End Cap Welding Tool	The ECWT tip shall have a pin that can rotate independently from the tool, but it shall be locked to it axially. The aim of this pin is to position the welding head axially by touching the End Cap front surface or the bottom surface of its PHS socket.	axial positioning precision: 0.1 mm (TBC)	n/a	Mandatory
202	End Cap Welding Tool	The ECWT tip shall fit into the the diam. 57H9 counterbore of the SB. Thus, the diameter of the tool shall be limited.	n/a	n/a	Mandatory
203	End Cap Welding Tool	The ECWT shall be capable of producing an autogenous full-penetration I-shaped butt weld between the EC pipe and the SB using TIG welding.	ø 50-52 mm thickness: 2.5 mm	n/a	Mandatory
204	End Cap Welding Tool	The ECWT welding head shall be designed so that welding can be perfomed in different depths corresponding to subsequent welding positions. Two subsequent positions have an axial offset of 7.5 mm. This means that the ECWT shall be capable of passing through the hole created by the ECCT.	n/a	n/a	Mandatory
205	End Cap Cutting Tool	The End Cap Cutting Tool (ECCT) is a Tool. Thus, all generic Tool requirements shall be applied to it.	n/a	n/a	Mandatory
206	End Cap Cutting Tool	The ECCT shall include a centering pin at the tip to provide axial positioning and additional rigidity during the cutting procedure. This pin shall interface with the PHS socket of the EC.	n/a	n/a	Mandatory
207	End Cap Cutting Tool	The ECCT shall have connecting features to the SBTB/15NDTB TFU, to which it must be locked rigidly after installation and before operation.	n/a	n/a	Mandatory
208	End Cap Cutting Tool	The ECCT shall be able to cut the welded joint between the EC and the SB using a hole saw.	thickness: 2.5 mm	n/a	Mandatory
209	End Cap Cutting Tool	The ECCT hole saw outside diameter shall be bigger than the outer diameter of an EC.	ø 51.7 mm	minimum	Mandatory
210	End Cap Cutting Tool	The upper limit for the diameter of the hole saw shall be defined so that the saw shall not touch the wall of the SB hole between the EC lips.	ø 54	maximum	Mandatory
211	End Cap Cutting Tool	The hole saw of the ECCT shall be capable of spinning motion with respect to the stationary centring shaft.	n/a	n/a	Mandatory

212	End Cap Cutting Tool	The hole saw of the ECCT shall be able to move linearly along the tool, while it is spinning. This may be an internal function of the ECCT, or it could be done by the TFU elevation mechanism.	stroke: 10 mm	minimum	Mandatory
213	End Cap Cutting Tool	The hole saw feed rate shall be controlled during the whole cutting procedure.	feed rate TBD by testing	n/a	Mandatory
214	End Cap Cutting Tool	The position of the hole saw and motor input current shall be monitored.	n/a	n/a	Mandatory
215	End Cap Cutting Tool	The ECCT shall get its services from the SBTB.	n/a	n/a	Mandatory
216	End Cap Cutting Tool	The ECCT tip shall fit into the the diam. 57H9 counterbore of the SB. Thus, the diameter of the tool shall be limited.	n/a	n/a	Mandatory
217	End Cap Cutting Tool	The ECCT head shall be designed so that cutting can be perfomed in different depths corresponding to rewelding positions. Two subsequent positions have an axial offset of 7.5 mm. This means that the ECCT head shall be capable of passing through the hole that it created or the ECCT shall have multiple hole saw cutter options with reducing diameters.	n/a	n/a	Mandatory
218	End Cap Cutting Tool	The ECCT design shall comprise a suction device to remove the swarf generated during the cutting operation (see generic All Tools RQ 67).	n/a	n/a	Mandatory
219	15ND Gripper	The 15ND Gripper (15NDG) is an EE. Thus, all generic EE requirements shall be applied to it.	n/a	n/a	Mandatory
220	15ND Gripper	The 15NDG shall be capable of holding a 15ND block that weighs 2.5 tons.	2.5 tons	minimum	Mandatory
221	15ND Gripper	The 15NDG shall utilize the 15ND conical holes and their bottom threads for gripping.	n/a	n/a	Mandatory
222	15ND Gripper	The engagement length and tightening torque of the bolts running through and fixing the 15NDG cones shall be monitored.	n/a	n/a	Mandatory
223	15ND Gripper	The 15NDG cones and support structure shall be designed so that they can withstand the worst case bending moment due to the 15ND being held in a horizontal position.	6250 Nm	n/a	Mandatory
224	15ND Gripper	One of the 15NDG cones shall be fixed and the other shall have floating features that allow slight axial and radial play in order to have perfect connection at both cone positions.	n/a	n/a	Mandatory
225	15ND Gripper	The 15NDG shall be capable of torquing the ESB by a wrench mechanism integrated into the 15NDG.	240 Nm	±10 %	Mandatory
226	15ND Gripper	If technically feasible, the 15NDG shall be capable of applying final torque to the ESB.	480 Nm	±10 %	Expected
227	15ND Gripper	The accessory handheld wrench of the FBT shall be used to bolt the FCB farthest from the gripping cones. It shall only be bolted to hand tightness by an operator on the Nacelle. 15NDG structure shall not obstruct the bolting wrench access to the side FCB.	n/a	n/a	Mandatory
228	15ND Gripper	The thread engagement length and tightening torque of the ESB shall be monitored during the tightening process.	n/a	n/a	Mandatory
229	15ND Gripper	The 15NDG shall have passive pressing pads on the sides of the cones, without complience mechanism, to interface with the 15ND front plane and to take up moment load.	n/a	n/a	Mandatory
230	15ND Gripper	The distance from the 15NDG Tool Changer tool side interface plane and the interface plane with the 15ND shall be limited, so that the moment on the General EE main roll axis in the worst case scenario (15NDG being held in a horizontal position) is less than the main roll joint capacity.	7 kNm	maximum	Expected
231	15ND Tool Base	The 15ND Tool Base (15NDTB) is an EE. Thus, all generic EE requirements shall be applied to it.	n/a	n/a	Mandatory
232	15ND Tool Base	The 15NDTB shall have the same interfaces with the 15ND as the 15NDG has. This shall include the two (one fix and one floating) cone and thread connection and the passive pressing pads.	n/a	n/a	Mandatory
233	15ND Tool Base	The engagement length and tightening torque of the bolts running through and fixing the 15NDTB cones shall be monitored.	n/a	n/a	Mandatory
234	15ND Tool Base	The Tool Changer tool side shall be installed to the opposide side of the 15NDTB from the cones.	n/a	n/a	Mandatory
235	15ND Tool Base	The 15NDTB shall have 3 fixed mounting features, aligned with the 3 FCB axes, to connect the wrench mechanism of the FBT. The wrench shall have the torque multiplier and motor attached to its end. The 15NDTB mounting feature shall provide reaction feature and rigid connection to the torque multiplier.	n/a	n/a	Mandatory
236	15ND Tool Base	The 15NDTB shall be able to take up and transfer the reaction torque of the FBT wrench mechanism to the 15ND Shield Block via the interface cones.	8.4 kNm	±10%	Mandatory
237	15ND Tool Base	The 15NDTB shall comprise one Tool Fixing Unit (TFU) that is compatible with the MCAMT, MCPT, MCWT, MCCT, ECWT, ECCT.	n/a	n/a	Mandatory
238	15ND Tool Base	The TFU of the 15NDTB and the TFU of the SBTB should be identical. If this is not reasonable or technically feasible in the context of 15ND, the two shall be standardized as much as possible, in order to avoid proliferation of designs for similar functions.	n/a	n/a	Expected
239	15ND Tool Base	The Tool Fixing Unit of the 15NDTB shall have enough DOFs, with respect to the plate fixed to the SB, for coaxiality with the SB hole to be set properly.	coaxiality: 0.1 mm	maximum	Mandatory
240	15ND Tool Base	TBC: In case the Z vertical drive is not integrated into the Tools, the Tool Fixing Unit of the 15NDTB shall be capable of lowering and raising the Tools after the alignment has been set. This is to allow the distance measurement sensor to reach and scan the joint.	vertical motion range: ±30 mm	minimum	Mandatory
241	15ND Tool Base	The 15NDTB design shall comprise a shim, placed between the 15NDTB plate and the 15NDTB TFU to align the TFU with the target pipe joint. Shim dimensions shall correspond to MC angles.	1 shim angle	n/a	Mandatory
242	15ND Tool Base	The TFU of the 15NDTB shall have a XY table with a movement range that allows the TFU to align the tools with both MC positions without reconfiguration.	2 MC positions	n/a	Mandatory
243	15ND Tool Base	On the 15NDTB, a compact vacuum cleaner with dust container shall be integrated to be able to remove and store temporarily the swarf generated by cutting. The vacuum suction hose shall be able to connect to the appropriate Tool socket.	n/a	n/a	Mandatory
244	First Wall Gripper	The First Wall Gripper (FWG) is an EE. Thus, all generic EE requirements shall be applied to it.	n/a	n/a	Mandatory

245	First Wall Gripper	The FWG shall have 2 standard gripping fingers, to grab First Walls and active pads. The gripping fingers and pads shall be actuated remotely when the FWG is attached to the General EE.	n/a	n/a	Mandatory
246	First Wall Gripper	The FWG structure shall be able to carry the heaviest FW unit regardless of its orientation inside the vessel.	1 ton	capacity max.	Mandatory
247	First Wall Gripper	The FWG shall be able to change the distance between the gripping fingers and the Central Bolt wrench via embedded linear drive units, to be able to cover as many FW variants as possible.	wrench axial stroke: 185 mm	minimum	Mandatory
248	First Wall Gripper	The FWG shall have an automated function (controlled from the RH control room) to engage and torque the FW central bolt, whilst being attached to the BAT via the Tool Changer.	n/a	n/a	Mandatory
249	First Wall Gripper	During the CB bolting procedure, the FWG control system shall be able to synchronize wrench extension and rotation motions according to the pitch of the CB thread (M64x4).	n/a	n/a	Mandatory
250	First Wall Gripper	The central bolt connection between the FW and the SB shall be torqued, by a wrench mechanism integrated into the FWG.	137 kNm	0 / +20%	Mandatory
251	First Wall Gripper	The thread engagement length and tightening torque of the Central Bolt shall be remotely monitored during the tightening process.	n/a	n/a	Mandatory
252	First Wall Gripper	The FWG wrench mechanism shall be able to cope with a lateral and angular misalignment between the FW Central Bolt and the FWG wrench.	n/a	lateral: ±2.07mm angular: ±0.3°	Mandatory
253	First Wall Gripper	The FWG design shall include cameras mounted onto its shorter sides (1 camera at each end). The cameras shall look at adjacent BM rows when installing the TFW.	n/a	n/a	Mandatory
254	FW Cent. Bolt Torq. End Effector	The First Wall Central Bolt Torquing End Effector (FWCBT) is an EE. Thus, all generic EE requirements shall be applied to it.	n/a	n/a	Mandatory
255	FW Cent. Bolt Torq. End Effector	The FWCBT shall include a torque application mechanism to apply final torque to the Central Bolt.	8.4 kNm	±10%	Mandatory
256	FW Cent. Bolt Torq. End Effector	The FWCBT shall remain connected to the BAT via the Tool Changer during the torquing operation.	n/a	n/a	Mandatory
257	FW Cent. Bolt Torq. End Effector	The FWCBT shall have two cylindrical pins with guiding features at the end to interface with the FW gripping holes to transfer to the FW the reaction force from torqueing.	n/a	n/a	Mandatory
258	FW Cent. Bolt Torq. End Effector	The FWCBT body shall have oblong holes, on the line connecting the two pin positions, for mounting the pins to be able to position them according to the target FW, to be compatible with as many FWs as possible.	n/a	n/a	Mandatory
259	FW Cent. Bolt Torq. End Effector	The FWCBT shall be designed so that it can be reconfigured ex-vessel for different target FWs.	n/a	n/a	Mandatory
260	FW Cent. Bolt Torq. End Effector	The FWCBT shall have spring loaded passive pads to provide compliance when the BAT engages the pins with the gripping holes.	n/a	n/a	Mandatory
261	FW Cent. Bolt Torq. End Effector	The wrench of the FWCBT shall be installed onto the FWCBT after it has been delivered to the target TFW with the BAT. So, the wrench shall be designed as a separate unit.	n/a	n/a	Mandatory
262	FW Cent. Bolt Torq. End Effector	The wrench shall be compatible with the zero G arm for handling. After insertion into the FWCBT, it shall be made possible to fix the wrench to the Tool Base, so that the operator can detach the zero G arm.	n/a	n/a	Mandatory
263	FW Cent. Bolt Torq. End Effector	The FWCBT wrench shall have only one length and the difference in Central Bolt depth with respect to the TFW front face shall be compensated for by a set of shims, each shim corresponding to a CB depth variant. During ex-vessel reconfiguration the appropriate shim shall be fixed to the wrench.	n/a	n/a	Mandatory
264	FW Cent. Bolt Torq. End Effector	The FWCBT shall have a solution for connection to its custom BMTS mounts.	n/a	n/a	Mandatory
265	Tool Storage Rack	The Tool Storage Rack(TSR) is an EE. Thus, all generic EE requirements shall be applied to it.	n/a	n/a	Mandatory
266	Tool Storage Rack	The TSR shall always be deployed to BM row 18.	n/a	n/a	Mandatory
267	Tool Storage Rack	The TSR shall have two versions (by reconfiguration or two different designs): 1. To connect to SBs in row BM 18. 2. To connect to TFWs in BM row 18.	n/a	n/a	Mandatory
268	Tool Storage Rack	For SB connection, the TSR shall have the same interfaces with the SB as other EEs connecting to regular SBs, as defined in RQ38. Only one version is needed because the target is always row 18.	n/a	n/a	Mandatory
269	Tool Storage Rack	For TFW connection, the TSR shall have the same interfacing equipment as the FWG, namely: gripping fingers and pads actuated remotely when the TSR is attached to the General EE. Gripping fingers shall be at fixed positions corresponding to the gripping hole positions in row 18.	n/a	n/a	Mandatory
270	Tool Storage Rack	The TSR shall be able to store multiple Tools at the same time, without any Tool clashing with BM row 17 or the Divertors.	4 Tools stored	minimum	Mandatory
271	Tool Storage Rack	The TSR shall be designed so that an operator can approach it on the Nacelle, attach the zero G arm to the Tool interface and pull it out from the TSR sideways (in toroidal direction).	n/a	n/a	Mandatory
272	Tool Storage Rack	Tools shall be locked in the TSR. The lock shall be manual and easy to unlock (ergonomic) for an operator approaching the TSR from the inboard side of the Tokamak.	n/a	n/a	Mandatory
273	Tool Storage Rack	Tools stored in the TSR shall be protected from falling objects from above. The reason for this is that the TSR might be left in place for multiple work shifts or days during which other assembly operations will continue, possibly above the TSR.	n/a	n/a	Expected
274	Nacelle Tool Storage	The Nacelle Tool Storage (NTS) shall be fixed to the Nacelle basket frame. The NTS is neither an EE nor a Tool, so generic requirements do not apply.	n/a	n/a	Mandatory
275	Nacelle Tool Storage	The NTS shall be made from either stainless steel or aluminium.	n/a	n/a	Mandatory
276	Nacelle Tool Storage	The NTS weight, including all fittings and fixtures, shall be below limit.	15 kg	maximum	Mandatory
277	Nacelle Tool Storage	The NTS shall be able to store Tools (all types).	2 Tools stored	n/a	Mandatory
278	Nacelle Tool Storage	The Tools in the NTS shall be accessible from above, to be grabbed by the zero G arm and pulled out of the NTS vertically.	n/a	n/a	Mandatory
279	Nacelle Tool Storage	Tools shall be locked when mounted on the NTS. The lock shall be manual.	n/a	n/a	Mandatory

280	Blanket Tooling Supporting Equipment	The Blanket Tooling Supporting Equipment (BTSE) shall provide services to End Effectors and Tools inside the VV: - Power to the Embedded Controller of the EE - Power to the TIG welding torch - Communications (feedback and control) - Compressed air - Shielding gas The BTSE is neither an EE nor a Tool, so generic requirements do not apply.	n/a	n/a	Mandatory	
281	Blanket Tooling Supporting Equipment	The TSS frame in the Port Cell shall comprise the following equipment: - TIG welding power generator - Shielding gas cylinders and gas mixer - Air compressor	n/a	n/a	Mandatory	
282	Blanket Tooling Supporting Equipment	The umbilical (or bundle) shall be led from the TSS to the Umbilical Handling System (UHS) located inside the Equatorial Port, where the UHS shall be locked to the Port side walls via a manually operated or automatic key mechanism.	n/a	n/a	Mandatory	
283	Blanket Tooling Supporting Equipment	The UHS shall comprise a coil with 30 m of umbilical on it. The coil shall be manually operated and shall not have slip rings but a fixed connector which rotates with the coil. When the needed amount of umbilical is uncoiled and the coil is fixed with brakes, it shall be possible to connect the welding skid umbilical to the connector of the coil in any random angular position it is in.	n/a	n/a	Mandatory	
284	Blanket Tooling Supporting Equipment	Inside the VV, the umbilical shall be clamped at multiple positions to avoid hanging in the torus. The clamp shall be able to connect to the VV, a SB or a TFW. Using the ESB threads seems straightforward, because they are the same M24 thread in all 3 cases.	n/a	n/a	Mandatory	
285	Blanket Tooling Supporting Equipment	The end of the umbilical shall connect to one of the Tool Changer connectors, to which it shall be fixed firmly. The connector and fixing mechanism of the umbilical shall be manual.	n/a	n/a	Mandatory	
286						
287						
288						
289						
290						
291						
292						
293						
294						
295						
296						
297	Flow Sep. Welding Tool	The Flow Separator Welding Tool (FSWT) is a Tool. Thus, all generic Tool requirements shall be applied to it.	n/a	n/a	Mandatory	Not in the scope of Initial Assembly
298	Flow Sep. Welding Tool	The FSWT shall include a pipe alignment mechanism in order to set perpendicularity and coaxiality of the welding head with respect to the FS hole.	coaxiality: 0.1 mm	maximum	Mandatory	Not in the scope of Initial Assembly
299	Flow Sep. Welding Tool	The FSWT shall have connecting features to the SBTB TFU, to which it must be locked rigidly after installation and before operation.	n/a	n/a	Mandatory	Not in the scope of Initial Assembly
300	Flow Sep. Welding Tool	The FSWT shall include an optical distance measurement sensor to scan the joint before welding.	gap&step: 0 mm resolution: 10 µm	0/+0.2 mm	Mandatory	Not in the scope of Initial Assembly
301	Flow Sep. Welding Tool	The welding head and distance measurement sensor of the FSWT shall be capable of rotation motion with respect to the stationary pipe alignment mechanism	400 degrees in both directions	minimum	Mandatory	Not in the scope of Initial Assembly
302	Flow Sep. Welding Tool	The cabling of the welding head and distance sensor shall allow the relative motion between the welding head and the stationary core. Cable management shall be taken care of within the covered volume of the FSWT.	n/a	n/a	Mandatory	Not in the scope of Initial Assembly
303	Flow Sep. Welding Tool	The FSWT shall get its services from the SBTB.	n/a	n/a	Mandatory	Not in the scope of Initial Assembly
304	Flow Sep. Welding Tool	The FSWT shall fit though the diam. 104 mm opening of the SB. Thus, the diameter of the tool shall be limited.	ø 95 mm	maximum	Mandatory	Not in the scope of Initial Assembly
305	Flow Sep. Welding Tool	The FSWT shall be capable of producing an autogenous full-penetration square butt weld between the FS pipe and the SB using TIG welding.	ø 70 mm thickness: 2.5 mm	n/a	Mandatory	Not in the scope of Initial Assembly
306	Flow Sep. Welding Tool	The FSWT shall be reconfigurable (not in-vessel) to produce the same welds at different diameters, for when the joint is cut and needs to be rewelded with an oversized FS.	Diameters: ø 70 mm ø 73 mm ø 76 mm	n/a	Mandatory	Not in the scope of Initial Assembly
307	Flow Sep. Cutting Tool	The Flow Separator Cutting Tool (FSCT) is a Tool. Thus, all generic Tool requirements shall be applied to it.	n/a	n/a	Mandatory	Not in the scope of Initial Assembly
308	Flow Sep. Cutting Tool	The FSCT shall include a pipe alignment mechanism in order to set perpendicularity and coaxiality of the cutter with respect to the SB hole.	n/a	n/a	Mandatory	Not in the scope of Initial Assembly
309	Flow Sep. Cutting Tool	The FSCT shall have connecting features to the SBTB TFU, to which it must be locked rigidly after installation and before operation.	n/a	n/a	Mandatory	Not in the scope of Initial Assembly
310	Flow Sep. Cutting Tool	The FSCT shall be able to cut the welded joint between the FS and the SB using a hole saw.	ø 70 mm thickness: 2.5 mm	n/a	Mandatory	Not in the scope of Initial Assembly
311	Flow Sep. Cutting Tool	The hole saw of the FSCT shall be capable of spinning motion with respect to the stationary pipe alignment mechanism	n/a	n/a	Mandatory	Not in the scope of Initial Assembly
312	Flow Sep. Cutting Tool	The FSCT shall be able to move the hole saw linearly along the tool, while it is spinning, with respect to the stationary pipe alignment mechanism core of the tool.	stroke: 10 mm	minimum	Mandatory	Not in the scope of Initial Assembly
313	Flow Sep. Cutting Tool	The FSCT shall get its services from the SBTB.	n/a	n/a	Mandatory	Not in the scope of Initial Assembly
314	Flow Sep. Cutting Tool	The FSCT shall fit though the diam. 104 mm opening of the SB. Thus, the diameter of the tool shall be limited.	ø 95 mm	maximum	Mandatory	Not in the scope of Initial Assembly
315	Flow Sep. Cutting Tool	The FSCT shall be reconfigurable (not in-vessel) to replace the hole saw for cutting different FS diameters, to be able to cut oversized FS as well.	Diameters: ø 70 mm ø 73 mm ø 76 mm	n/a	Mandatory	Not in the scope of Initial Assembly
316	Flow Sep. Cutting Tool	The FSCT design shall comprise a suction device to remove the chips generated during the cutting operation.	n/a	n/a	Mandatory	Not in the scope of Initial Assembly

317	First Wall Tool Base	The First Wall Tool Base (FWTB) is an EE. Thus, all generic EE requirements shall be applied to it.	n/a	n/a	Mandatory	Not in the scope of Initial Assembly
318	First Wall Tool Base	The FWTB shall connect to the FW by making use of the gripping finger holes. For this, standardized gripping fingers shall be used.	n/a	n/a	Mandatory	Not in the scope of Initial Assembly
319	First Wall Tool Base	The locking function of the gripping finger units of the FWTB shall be automatized.	n/a	n/a	Mandatory	Not in the scope of Initial Assembly
320	First Wall Tool Base	The gripping finger unit of the FWTB shall have a built in force sensor, to be used during insertion into the FW gripping hole.	n/a	n/a	Mandatory	Not in the scope of Initial Assembly
321	First Wall Tool Base	FWTB shall use pressing pads to press onto the FW units after the gripping fingers have been locked.	force TDB	n/a	Mandatory	Not in the scope of Initial Assembly
322	First Wall Tool Base	The pressing pads of the FWTB shall be retractable and extendable by automatic means.	n/a	n/a	Mandatory	Not in the scope of Initial Assembly
323	First Wall Tool Base	The FWTB shall be reconfigurable to be compatible with the FW ESBT, the CBT.	n/a	n/a	Mandatory	Not in the scope of Initial Assembly
324	First Wall Tool Base	The FWTB shall have rigid interfaces for TFUs, in the case of PCT and PWT.	n/a	n/a	Mandatory	Not in the scope of Initial Assembly
325	First Wall Tool Base	The FWTB TFUs shall provide a drive shaft for raising/lowering, rotation and making fine adjustments to the tool.	n/a	n/a	Mandatory	Not in the scope of Initial Assembly
326	First Wall Tool Base	There shall be an automatic fixing interface between the TFUs and the FWTB on the TFU side.	n/a	n/a	Mandatory	Not in the scope of Initial Assembly
327	First Wall Tool Base	After being fixed to the FWTB, the TFU shall receive services from the FWBT, though a connector between the two, which shall be connected manually by the operator.	n/a	n/a	Mandatory	Not in the scope of Initial Assembly
328	First Wall Tool Base	One FWTB design shall be compatible with as much FW designs as possible. For this, the gripping finger units shall be moveable vertically. This setting shall be a hands-on operation to simplify and save space for other functions.	n/a	n/a	Expected	Not in the scope of Initial Assembly
329	First Wall Tool Base	The TFU planar position with respect to the FWTB shall be adjustable on an automatized cross-roller table.	n/a	n/a	Expected	Not in the scope of Initial Assembly
330	First Wall Tool Base	The FWBT frame shall be capable of transmitting the reaction torque from the CBT to the FW.	8.4 kNm	±10%	Mandatory	Not in the scope of Initial Assembly

Scope
All EEs & Tools
All EEs
All Tools
Shield Block Gripper
FCB Torquing Tool Base
ES Bolt Torquing Tool
Viewing Tool
Shield Block Pulling&Welding Tool Base
Coax. Conn. Welding Tool
Coax. Conn. Cutting Tool
Monoax. Conn. Pulling Tool
Monoax. Conn. Alignment Measurement Tool
Monoax. Conn. Welding Tool
Monoax. Conn. Cutting Tool
End Cap Handling Tool
End Cap Welding Tool
End Cap Cutting Tool
15ND Gripper
15ND Tool Base
First Wall Gripper
FW Cent. Bolt Torq. End Effector
Tool Storage Rack
Nacelle Tool Storage
Blanket Tooling Supporting Equipment
First Wall Tool Base
Flow Sep. Cutting Tool
Flow Sep. Welding Tool

Importance
Mandatory
Expected

might not be needed for First Assembly (TBC)

not in the current scope of First Assembly

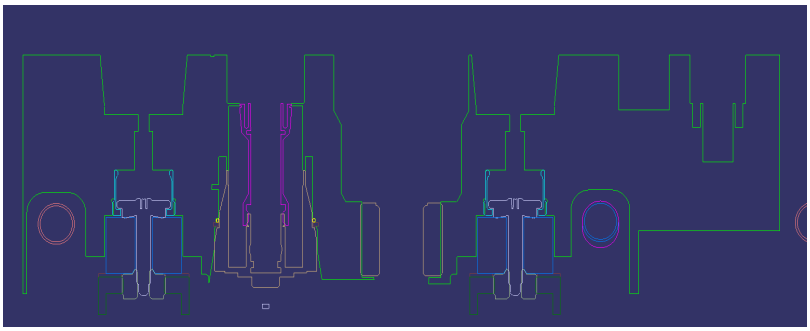

First Assembly EEs and Tools in the order of usage	
End Effectors	**Tools**
SBG	
FBT	
	ESBT
SBTB	CCWT
	CCCT
	MCPT
	MCAMT
	MCWT
	MCCT
	ECHT
	ECWT
	ECCT
15NDG	
15NDTB	MCPT
	MCAMT
	MCWT
	MCCT
	ECHT
	ECWT
	ECCT
FWG	
FWCBT	

Abbreviations	Description
15NDG	15ND Gripper
15NDTB	15ND Tool Base
AD	Applicable Documents
ALARA	As Low As Reasonably Achievable
AVC	Arc Voltage Control (for TIG welding tool)
BAT	Blanket Assembly Transporter
BM	Blanket Module (FW + SB)
BMTS	Blanket Module Transfer System
BRHS	Blanket Remote Handling System
BT	Bolting Tool
CB	Central Bolt
CBT	Central bolt Bolting Tool
CC	Coaxial Connector
CCW	Counterclockwise
CCCT	Coaxial Connector Cutting Tool
CCPT	Coaxial Connector Pulling Tool
CCT / ECCT	Cap Cutting Tool / End -
CCWT	Coaxial Connector Welding Tool
CHT / ECHT	Cap Handling Tool / End -
CMAF	CAD Model Approval Form
CMM	Configuration Management Model
COG	Centre Of Gravity
CW	Clockwise
CWT /ECWT	Cap Welding Tool / End -
DDP	Design Development Plan
DM	Detailed Model
DMNP	Dexterous Manipulator
DOF	Degrees of Freedom
EC	End Cap
ECHT	End Cap Holding Tool
ECWT	End Cap Welding Tool
ECCT	End Cap Cutting Tool
EDH	Electrical Design Handbook
EDR	Equipment and Documentation Review
EE	End Effector
ES	Electrical Strap
ESB	Electrical Strap Bolt
ESBT	Electrical Stap Bolt Torquing tool

FAT	Factory Acceptance Test
FBT	FCB Torquing Tool Base
FCB	Flexible Cartridge Bolt
FDR	Final Design Review
FS	Flow Separator
FSCT	Flow Separator Cutting Tool
FSHT	Flow Separator Handling Tool
FSWT	Flow Separator Welding Tool
FW	First Wall
FWCBT	FW Central Bolt Torquing End Effector
FWESBT	FW ES bolt Bolting Tool
FWG	FW Gripper
FWTB	First Wall Tool Base
HLT	Helium Leak testing Tool
ICD	Interface Control Document
ICSR	In-Cask Storage Rack
IMK	Inter Modular Keypads
IO	ITER Organization
IPT	In Port Transporter
IS	Interface Sheet
IVT	In-Vessel Transporter
JADA	Japan Domestic Agency
MC	Monoaxial Connector
MCAMT	Monoaxial Connector Alignment Measurement Tool
MCCT	Monoaxial Connector Cutting Tool
MCPT	Monoaxial Connector Pulling Tool
MCWT	Monoaxial Connector Welding Tool
MTPP	Module Tool Pallet Plate
NBDL	Neutral Beam Duct Liner
NBI	Neutral Beam Injection
NDE	Non-Destructive Examination
OD	Outer Diameter
PAT	Pipe alignment Tool
PBS	Plant Breakdown Structure
PCR	Project Change Request
PCT	Pipe Cutting Tool
PFPO-I	Pre Fusion Plasma Operation I
PHS	Passive Holding System
PR	Project Requirements

PWT	Pipe Welding Tool
QAP	Quality Assurance Program
RD	Reference Documents
RFA	Rail Fixing Arm
RH	Remote Handling
SAT	Site Acceptance Test
SB	Shield Block
SBESBT	SB ES bolt Bolting Tool
SBG	SB Gripper
SBTB	Shield Block Tool Base
SDP	System Design Process
SL	Seismic Load
SR	Safety Relevant for nuclear safety
SRD	System Requirements Document
TB	Tool Base
TBD	To Be Decided
TFU	Tool Fixing Unit
TMNP	Tool Manipulator
TR	Tool Rack
VC	Vacuum Cleaner
VFA	Vehicle Fixing Arm
VM / VMNP	Vehicle Manipulator
VT	Viewing Tool
VV	Vacuum Vessel
WPQR	Welding Procedure Qualification Record
WPS	Welding Procedure Specification